CITY OF DELAND
REGULAR MEETING OF THE PLANNING BOARD
JUNE 21, 2023 AT 5:00 PM
CITY HALL, COMMISSION CHAMBERS
120 SOUTH FLORIDA AVENUE

AGENDA

CALL TO ORDER

PLEDGE OF ALLEGIANCE

ROLL CALL

VERBAL REPORT ON CITY COMMISSION MEETINGS

MINUTES

1. Approval of Minutes from May 17, 2023 meeting - Continued to future meeting

VARIANCE OLD BUSINESS

VARIANCE NEW BUSINESS

1. Applicant Name: Dvonne Hernandez
   Project Number: V23-113 – Variance
   Project Location: Located on the south side of E. Taylor Rd., east of Shaelyn Pl. and west of Victoria Oaks Blvd.
   Project Description: Variance to allow crushed gravel to be used as a driveway surface material.
   Staff Planner: Sam Nelson

PUBLIC PARTICIPATION PROCEEDINGS

PLANNING - OLD BUSINESS

1. Applicant Name: Michael Radcliffe
   Project Number: SP22-211 – Site Plan for Meadowlea Village Phases 4-5
   Project Location: 22.11 acres located at 1004 Overlook Dr.
   Project Description: Expand existing mobile home park in 2 phases, to develop 103 mobile home spaces
   Staff Planner: Belinda Williams-Collins

PLANNING - NEW BUSINESS

1. Applicant Name: City of DeLand
   Project Number: AN23-105 – Annexation of city owned property consisting of parcels 2 and 4 of the Hiram Waters Grove Plat, to include the southern half of the adjacent E. Haven Rd. right of way
   Project Location: 2.2793 acres located on the south side of E. Haven Rd., east of S. Amelia Ave. and west of S. Garfield Ave.

Project Description: Annex 2.2793 acres
Staff Planner: Kendall Story

2. Applicant Name: City of DeLand
Project Number: AN23-106 – Petition to Annex a portion of Pine Street ROW
Project Location: 0.2927 acres located at 1630 Parade Circle
Project Description: Annex 0.2927 acres
Staff Planner: Belinda Williams-Collins

3. Applicant Name: City of DeLand
Project Description: 2050 Vision
Staff Planner: Kendall Story

OTHER BUSINESS

ADJOURNMENT

City of DeLand
PLANNING BOARD
V23-113
JUNE 21, 2023
A-3
TAYLOR RD E
SUBJECT PROPERTY
A-2
R-R
SHAELYN PL
LADY IRELYN CT
EMILY GLEN ST
Victoria Park PD
538
540
542
544
546
548
550
552
554
556
558
560
529
531
533
535
530
532
534
536
500
501
503
505
507
509
511
513
515
517
519
521
523
Legend:
City Zoning
County Zoning
N
Not to Scale

City of DeLand
PLANNING BOARD
V23-113
JUNE 21, 2023
A-3
TAYLOR RD E
SUBJECT PROPERTY
A-2
R-R
PD
SHAELYN PL
EMILY GLEN ST
LADY IRELYN CT
538
540
542
544
546
548
550
552
554
556
558
560
529
531
533
535
530
532
534
536
500
501
503
505
507
509
511
513
515
517
519
521
Legend:
City Zoning
County Zoning
N
Not to Scale

PLANNING STAFF
REPORT TO
CITY OF DELAND PLANNING
BOARD

June 21, 2023

A. APPLICATION NO: V23-113

APPLICANT: Dvonne Hernandez (Applicant/Owner)

REQUEST: Requesting a variance to allow for a crushed gravel driveway.

APPLICABLE ORDINANCES: Sec. 33-17.01 *R-R Rural Residential* **Sec 33-27.05**. *Low intensity agriculture* **Sec. 33-91.06** *Design standards for off-street parking and loading areas.* **Sec. 33-103.03** *Variances and appeals.*

B. SITE FACTORS:

LOCATION: E Taylor Road (702700000050)

PARCEL SIZE: +/- 4.38 Acres

EXISTING ZONING/USE: R-R Rural Residential

Required Minimum Setbacks in Feet				
Front	Rear Setback	Side Setback	Corner lot: Street side Setback	Accessory Uses & Structures
40’	40’	15’	40’	7.5’, 6’

MINIMUM REQUIREMENTS FOR DRIVEWAYS AND PARKING
The minimum separation required between vehicle use areas and the property line is one foot for one- and two-family residences and ten feet for all other uses. Staff may adjust in conjunction with redevelopment or change in use where the separation is less or absent.
Parking on grass and sidewalks is prohibited. Vehicle use areas must be paved or improved with concrete, asphalt concrete or industry recognized porous paving approved by the city's engineer. Areas paved with impervious material must be included in the site's impervious surface calculation.

	SURROUNDING USE:	SURROUNDING ZONING:
NORTH:	Single-Family Dwelling	Volusia County A-3
SOUTH:	Single-Family Dwelling	Victoria Park PD
EAST:	Single-Family Dwelling	Victoria Park PD

WEST: Single-Family Dwelling Victoria Park PD

DOES THE APPLICANT OWN PROPERTY WHICH IS ADJACENT TO THE PROPERTY FOR WHICH HE OR SHE SEEKS A VARIANCE? Yes ☐ No ☒

C. LAND USE PLAN DESIGNATION: Low Density Residential

CHRONOLOGY:
The applicant is requesting a variance to allow for crushed gravel to be used as a driveway material. The applicant is proposing to subdivide their current lot into 2 with the intention of building on one and selling the other. A shared driveway will be provided. (Exhibit B) The applicant intends to keep horses on their section of property. The applicant applied for annexation, rezoning, and change of land use in 2021 and was approved. A minor subdivision application is ongoing. The vacant property located on E Taylor Rd is located in the R-R Rural Residential zoning district. (Exhibit C) The property is surrounded on 3 sides by Victoria Park, and to the north is Volusia County A-3 zoning. The applicant intends to reside on one of the proposed lots and have agriculture as an accessory use.

Following the required notice to adjacent property owners, an inquiry about the nature of the proposed variance was made. The Planner explained the scope and the inquirer had no issue.

D. ANALYSIS:
The applicant is requesting crushed gravel be allowed for paving their driveway. Crushed gravel is currently not an approved material for vehicle use areas within the City of DeLand. Currently allowed materials include concrete, asphalt concrete; or an industry recognized porous paving system. Gravel is not allowed due to stormwater concerns, specifically vehicles tracking. The applicant intends to keep horses on this property. Concrete or asphalt surfaces can be damaging to the hooves of horses, and is often used on rural or larger lots developments.

The applicant's property is located within the R-R Rural-residential zoning district. The purpose of this district is to provide a gradual transition between agricultural and urban/single-family development. The R-R district is rare within the City and there is currently only one other residence located within this district. The Land Development Regulations were developed with more urban areas in mind, creating difficulties when developing rural areas. Additionally, the code permits Low Intensity Agriculture as an accessory use in the R-R district. Low intensity agriculture uses include the raising of crops and the keeping of livestock.

The land uses surrounding the property are primarily single-family residential, with

Victoria Park surrounding the property on three sides. Bridle Oaks, a planned development which contains a gravel driveway and agricultural use is located nearby on E. Taylor Road. (Exhibit A)

E. VARIANCE CRITERIA: Per Section 33-103.03, as amended, the Planning Board will consider the following criteria in making a determination concerning the granting or denial of the requested variance:

1. Special conditions and circumstances exist which are peculiar to the land, structure, or building involved, and which are not applicable to other lands, structures, or buildings in the same zoning district.

   The other developed property in this zoning district was constructed prior to the requirement to have certain materials for driveways. The proposed rural use of the property is consistent with the gravel driveway request. The applicant has proposed paving the apron and the first 75 feet of the driveway, which would give the appearance of a standard residential driveway.

2. Granting of the variance request will not confer on the applicant any special privilege that is denied by these Land Development Regulations to other lands, building, or structures in the same zoning district.

   Granting of the variance would not confer special privileges when compared with other R-R district properties, as the only other R-R residence contains a gravel driveway. (Exhibit E)

3. Literal interpretation and enforcement of these Land Development Regulations will deprive the applicant of rights commonly enjoyed by other properties in the same zoning district under the terms of these Land Development Regulations, and work unnecessary and undue hardship on the applicant such as natural site conditions, size or shape of lot, or existing structures(s).

   The literal interpretation and enforcement of the code would deprive the applicant of rights commonly enjoyed by other properties in the same zoning district, as the existing property within the R-R zoning district was developed with a gravel driveway, and the other R-R zoned properties within the City are undeveloped.

4. The granting of the variance will be in harmony with the general intent and purpose of these Land Development Regulations and the Comprehensive Plan, as amended, and will not be injurious to the surrounding properties or detrimental to the public welfare.

   The granting of this variance will be in harmony with the intent of rural zoning designations, and not be injurious to surrounding properties as the

gravel portion of the driveway will be sufficiently screened from public view. Additionally, the apron and first 75 feet of the shared driveway will be paved.

5. The Variance, if granted, is the minimum variance necessary to make possible the reasonable use of the land, building or structure.

   This variance is the minimum necessary to allow the reasonable use of this property for the accessory agricultural purpose of keeping horses.

6. The special conditions or circumstances are not the result of actions of the applicant or owner.

   The special conditions are not a result of actions taken by the applicant. All properties located within the City must comply with the Land Development Regulations. Being a newly annexed property, the City's regulations apply.

F. STAFF SUMMARY:

The applicant is requesting a variance to allow for gravel as an approved driveway material. Asphalt and concrete could be detrimental to the health of the horses that they intend to keep on their property. The property is located within a rural zoning district, which supports agriculture as an accessory use. The DeLand Land Development Regulations were developed with more urban areas in mind, which makes reasonable development of rural properties difficult. The other rural zoned property in DeLand contains a gravel driveway, and the nearby Bridle Oaks PD also contains a gravel driveway. If approved, it is recommended to require the first 75' of the driveway to be constructed with an approved material to alleviate stormwater concerns, to prevent the tracking of gravel into the right of way, minimize airborne dust, and reduce sediment into the City's stormwater system.

Attachments:
Exhibit A – Aerial
Exhibit B – Proposed Subdivision
Exhibit C – Zoning
Exhibit D – Street Frontage
Exhibit E – R-R District
Exhibit F – Bridle Oaks Driveway

Exhibit A – Aerial

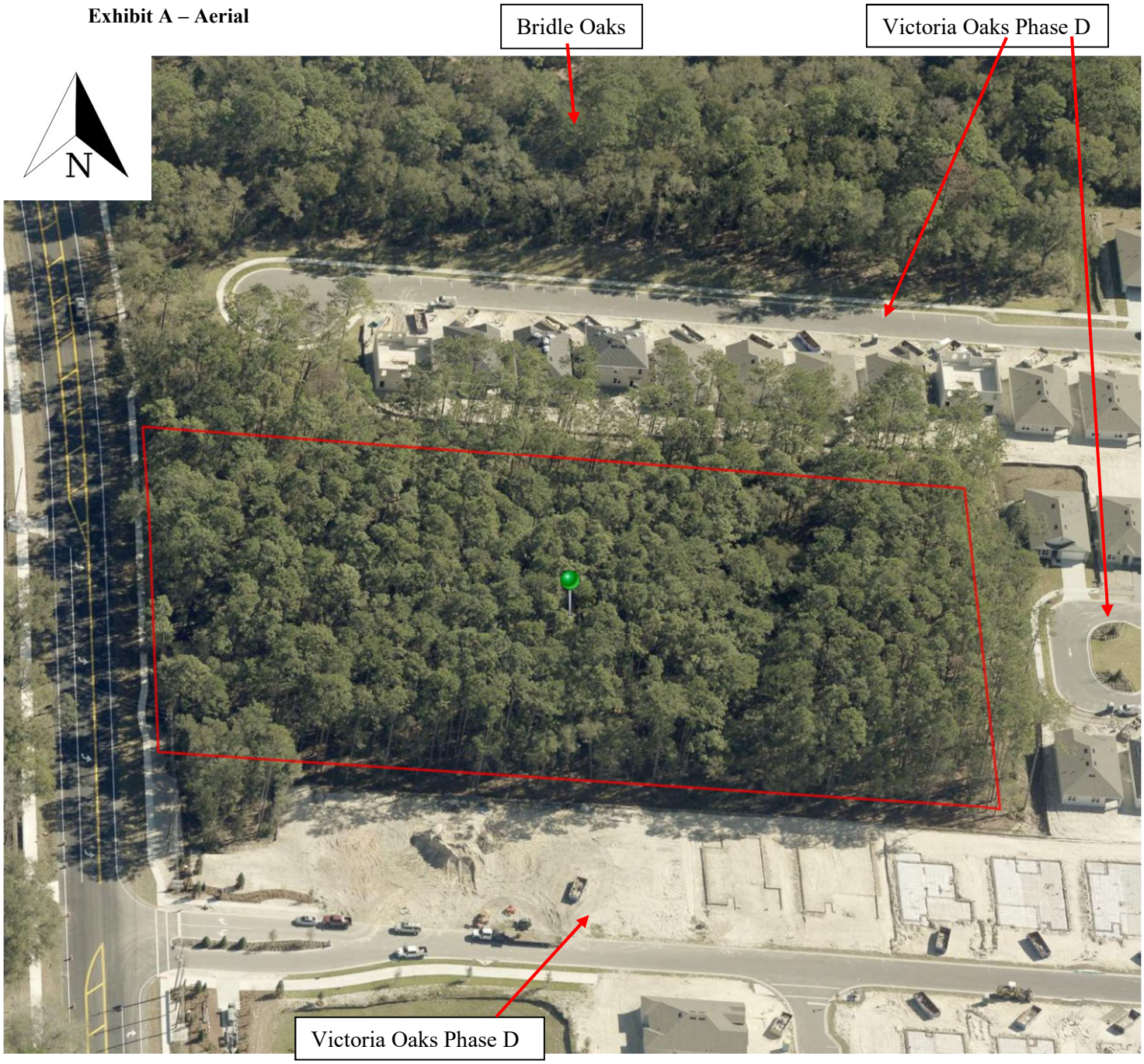

Exhibit B – Proposed Subdivision

Proposed Parcel "B" Legal Description:

A PORTION OF THE WEST 1/2 OF THE NORTHEAST 1/4 OF THE NORTHWEST 1/4 OF SECTION 27, TOWNSHIP 17 SOUTH, RANGE 30 EAST LYING AND BEING IN VOLUSIA COUNTY, FLORIDA, DESCRIBED AS FOLLOWS:

COMMENCING AT THE INTERSECTION OF THE SOUTH RIGHT-OF-WAY LINE OF EAST TAYLOR ROAD AS IT IS NOW LAID OUT, AND THE WEST LINE OF THE NORTHEAST 1/4 OF THE NORTHWEST 1/4 OF THE NORTHEAST 1/4 OF SAID SECTION 27, THENCE RUN NORTH 89°26'38" EAST ALONG SAID SOUTH RIGHT-OF-WAY LINE OF SAID EAST TAYLOR ROAD, 153.22 FEET TO A POINT ON SAID SOUTH RIGHT-OF-WAY LINE, SAID POINT BEING THE POINT OF BEGINNING;

THENCE CONTINUING ALONG SAID SOUTH RIGHT-OF-WAY LINE RUN NORTH 89°26'38" EAST, A DISTANCE OF 79.14 FEET TO A POINT OF CURVATURE OF A CURVE; SAID CURVE BEING CONCAVE NORTHERLY HAVING A RADIUS OF 3582.24 FEET, A CHORD BEARING OF NORTH 88°39'05" EAST, WITH A DISTANCE OF 99.07 FEE, THENCE RUN EASTERLY ALONG SAID CURVE THROUGH A CENTRAL ANGLE OF 01°35'06", A DISTANCE OF 99.07 FEET TO A POINT ON SAID CURVE, SAID POINT BEING THE NORTHWEST CORNER OF TRACT "C", VICTORIA OAKS PHASE "C", ACCORDING TO THE PLAT THEREOF AS RECORDED IN PLAT BOOK 63, PAGES 1 - 6, OF THE OFFICIAL RECORDS OF VOLUSIA COUNTY, FLORIDA; THENCE DEPARTING SAID SOUTH RIGHT-OF-WAY LINE AND ALONG THE WEST LINE OF THE AFOREMENTIONED TRACT "C" RUN SOUTH 01°16'05" EAST, A DISTANCE OF 577.02 FEET TO A POINT; THENCE DEPARTING SAID WEST LINE OF TRACT "C" RUN SOUTH 89° 26'19" WEST, A DISTANCE OF 331.33 FEET TO A POINT ON THE AFORESAID WEST LINE OF THE NORTHEAST 1/4 OF THE NORTHWEST 1/4 OF SAID SECTION 27, SAID POINT BEING A POINT ON THE EAST LINE OF THE AFORE SAID TRACT "C"; THENCE DEPARTING SAID SOUTH LINE AND ALONG THE EAST LINE OF SAID TRACT"C" RUN NORTH 01°16'45" WEST, A DISTANCE OF 291.18 FEET TO A POINT ON THE WEST LINE OF SAID TRACT "C"; THENCE DEPARTING THE AFORESAID WEST LINE RUN NORTH 89°26'19" EAST, A DISTANCE OF 153.19 FEET; THENCE RUN NORTH 01°16'25" WEST, A DISTANCE OF 284.50 FEET TO A POINT, SAID POINT BEING THE POINT OF BEGINNING;

CONTAINING 147,214.79 SQ FT ± OR 3.38 ACRES ±

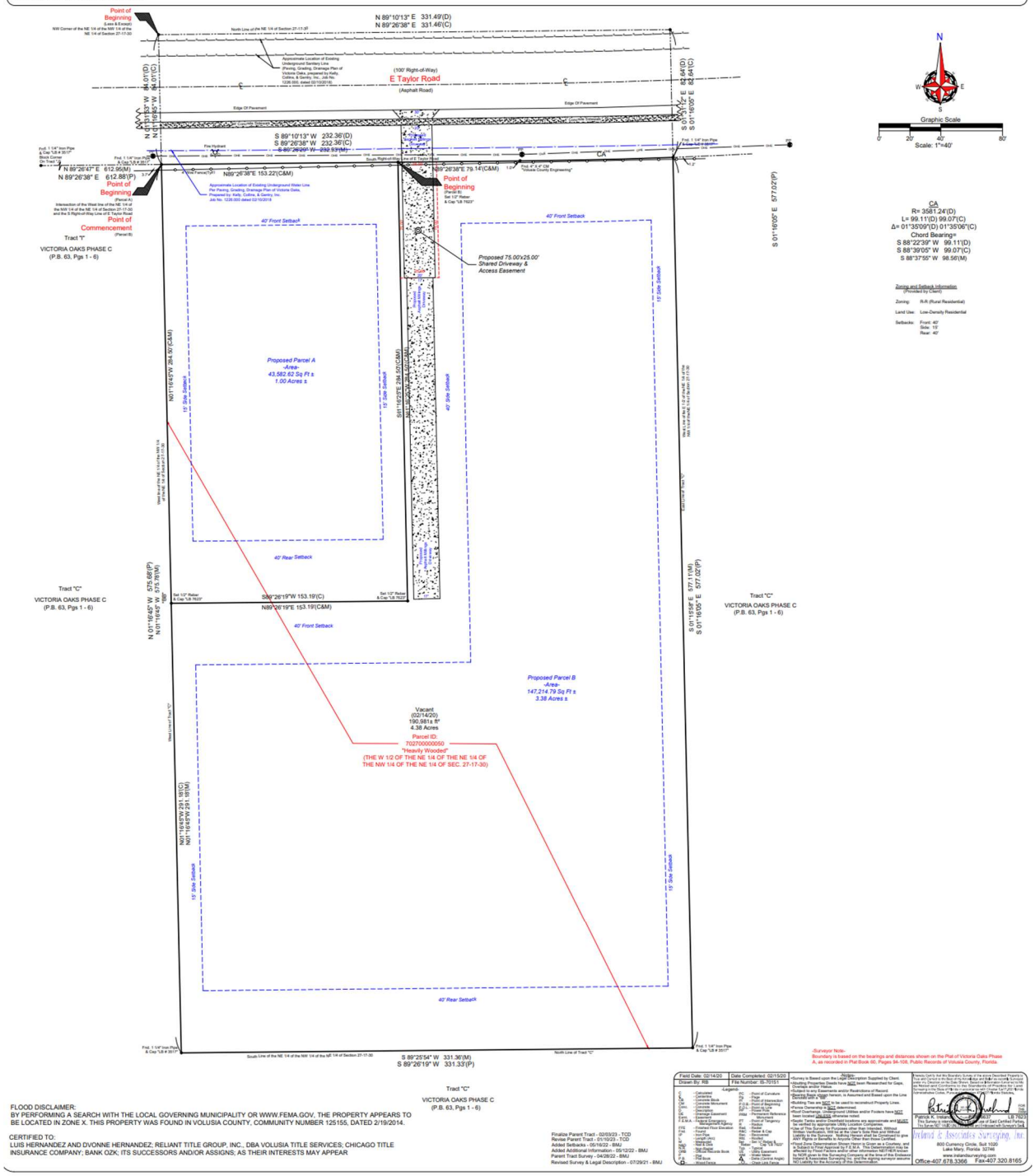

FLOOD DISCLAIMER:
BY PERFORMING A SEARCH WITH THE LOCAL GOVERNING MUNICIPALITY OR WWW.FEMA.GOV, THE PROPERTY APPEARS TO BE LOCATED IN ZONE X. THIS PROPERTY WAS FOUND IN VOLUSIA COUNTY, COMMUNITY NUMBER 125155, DATED 2/19/2014.

CERTIFIED TO:
LUIS HERNANDEZ AND DVONNE HERNANDEZ; RELIANT TITLE GROUP, INC., DBA VOLUSIA TITLE SERVICES; CHICAGO TITLE INSURANCE COMPANY; BANK OZK; ITS SUCCESSORS AND/OR ASSIGNS; AS THEIR INTERESTS MAY APPEAR

Finalize Parent Tract - 02/03/23 - TCD
Revise Parent Tract - 01/10/23 - TCD
Added Setbacks - 05/16/22 - BMJ
Added Additional Information - 05/12/22 - BMJ
Parent Tract Survey - 04/28/22 - BMJ
Revised Survey & Legal Description - 07/29/21 - BMJ

Field Date: 02/14/20
Drawn By: RB
Date Completed: 02/15/20
File Number: B-70151

Legend:
C - Calculated
CB - Concrete Block
CM - Concrete Monument
Conc - Concrete
D - Description
DE - Drainage Easement
E - Easement
F.I.R.M. - Flood Insurance Rate Map
FF - Finished Floor Elevation
I.P. - Iron Pipe
I.R. - Iron Rod
M - Measured
MB - Map Book
N&D - Nail & Disk
OR - Official Records Book
P - Plat
PB - Plat Book
R - Record Data
POC - Point of Curvature
POB - Point of Beginning
POI - Point of Intersection
POT - Point of Tangency
P.O.C. - Point on Line
POB - Point Of Beginning
PRM - Permanent Reference Monument
PT - Point of Tangency
R - Radius
Rad. - Radial
Bear. - Bearing
Rec - Recovered
Sec - Section
Tel. - Telephone
Twp. - Township
Rge. - Range
U/E - Utility Easement
D/E - Drainage Easement
Δ - Delta (Central Angle)
CLF - Chain Link Fence

Notes:
•Survey is Based upon the Information Supplied by Client.
•Abutting Properties Deeds have NOT been Researched for Gaps, Gores, or Overlaps.
•Subject to any Easements and/or Restrictions of Record.
•Bearing Basis: Assumed hereon, is Assumed and Based upon the Line Shown as Bearing.
•Building Ties are NOT to be used to reconstruct Property Lines.
•Fence Ownership is NOT determined.
•Roof Overhangs, Underground Utilities and/or Footers have NOT been located, unless noted.
•Septic Tanks and/or Drainfield locations are approximate and MUST be located by the appropriate Agencies.
•Use of This Survey for Purposes other than Intended, Without Written Permission from the Surveyor is Prohibited. Without Liability to the Surveyor. Nothing Hereon shall be Construed to give any Rights or Benefits to Anyone Other than those Certified.
•Flood Zone Determination Shown Hereon is for Insurance Purposes, and is Subject to Final Approval by F.E.M.A. This Determination may be Subject to Change or Modification. Any Reliance on this Survey by NON given to this Surveying Company at the time of the Endorsement Indard & Associates Surveying Inc. and the signing surveyor assume NO Liability for the Accuracy of this Determination.

•Surveyor Note-
Boundary is based on the bearings and distances shown on the Plat of Victoria Oaks Phase A, as recorded in Plat Book 60, Pages 94-108, Public Records of Volusia County, Florida.

I Hereby Certify that this Boundary Survey of the above Described Property is Accurate and Complete to the Best of my Knowledge and Belief, and that it Meets or Exceeds the Current Standards of Practice Set Forth by the Florida Board of Professional Surveyors and Mappers in Chapter 5J-17.051 Florida Administrative Code, Pursuant to Section 472.027 Florida Statutes.

Patrick K. Indard
Patrick K. Indard, Jr. Date
Professional Surveyor & Mapper No. 5867 LB 7609
This Survey is Valid only with the Original or Digital Seal of a Florida Licensed Surveyor and Mapper.

Indard & Associates Surveying, Inc.
800 Currency Circle, Suite 1020
Lake Mary, Florida 32746
www.indardsurveying.com
Office-407.678.3366 Fax-407.320.8165

Exhibit C – Zoning

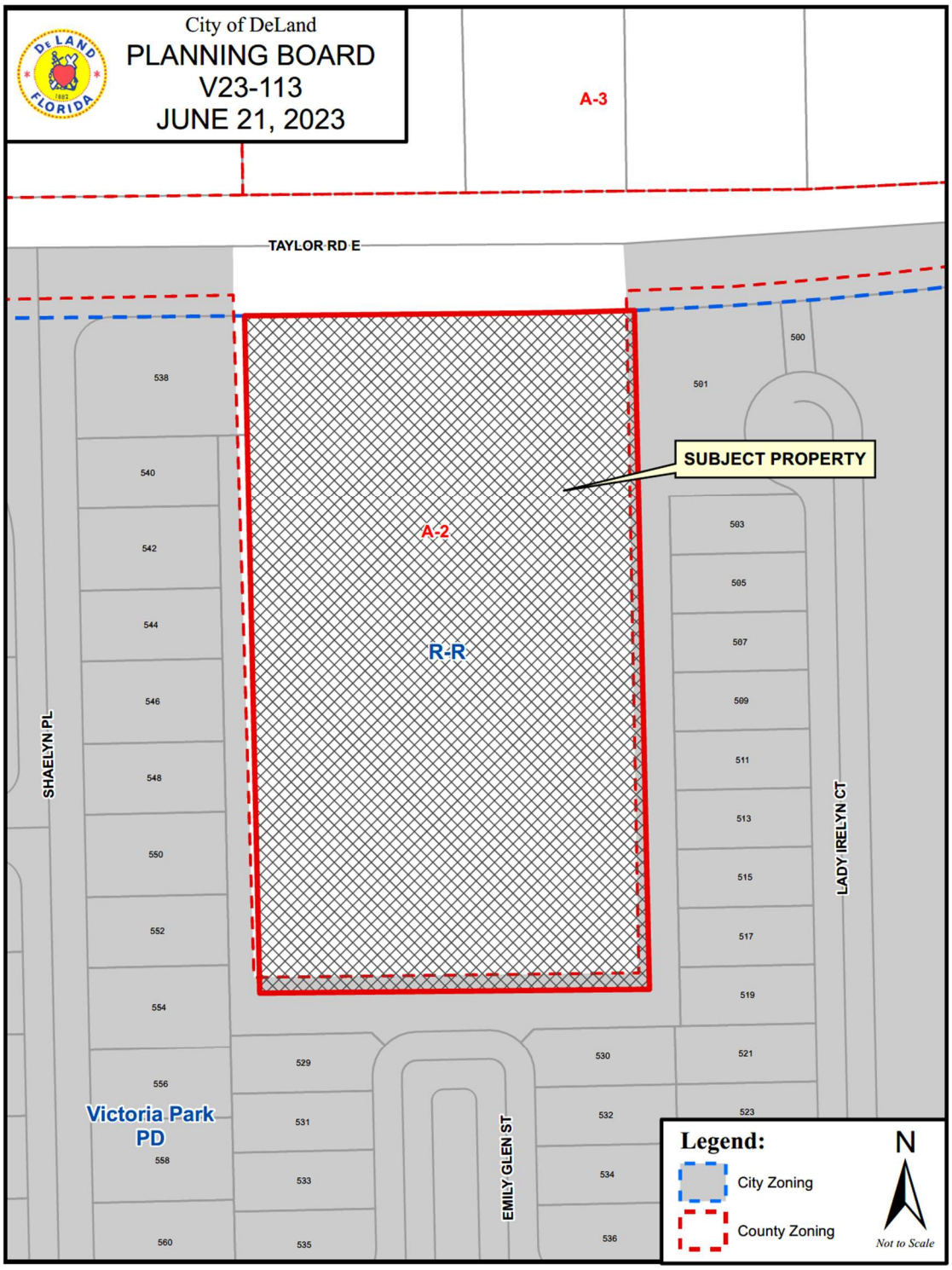

Exhibit D – Street Frontage

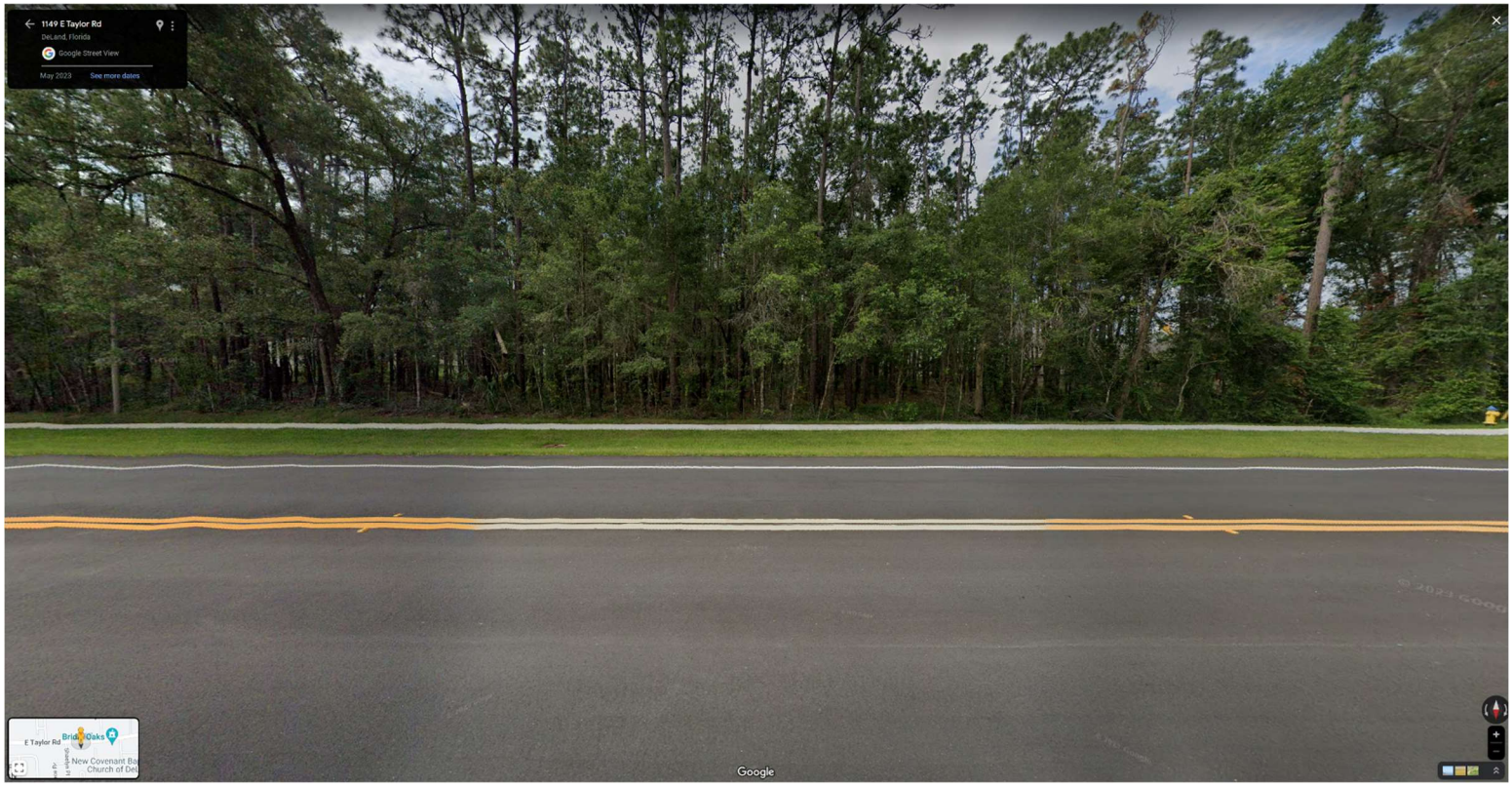

Exhibit E – R-R District

Exhibit F – Bridle Oaks Driveway

Planning Department Memorandum

TO: Planning Board

DATE: June 6, 2023

FROM: Belinda Williams-Collins, Sr. Planner

SUBJECT: Site plan review - Meadowlea Village Ph 4-5

==========

At the May 17, 2023 meeting of the Planning Board, the applicant requested additional time to explore the feasibility of adding a secondary access point for this next phase of the project which consists of an additional 103 residential units. The information, including a Traffic Impact Analysis (TIA), a summary regarding the feasibility of adding an additional access point, and an alternative solution regarding secondary access has been provided.

The applicant concluded (correspondence attached) that adding an additional access point at the southern end of the development would present a financial burden. Because Charles P. Bailey Road is not expected to be paved in the near future, a full-movement access point is not feasible.

The City's Deputy Fire Marshall has indicated that the roadway (Charles P. Bailey Road) was checked to determine if a fire truck could reach the area in an emergency situation and it was concluded that it could. The City's Deputy Public Services Director/City Engineer has indicated that there are no plans to pave the roadway until development takes place in the area, however, the road can be graded as needed to make it more stable for emergency vehicle use.

The TIA stated that the expansion would only result in an additional 0.3 second delay at the project entrance, there was not enough benefit anticipated to offset the cost of a second entrance. Additionally, the cost of extending Charles P. Bailey Road and improving it to current city engineering standards was estimated at $937,400.00 and was considered too significant in relation to the overall project costs for an affordable, over-55 residential development.

However, the applicant has proposed an alternative to a full-movement access point that meets the intent of the development regulations and provides additional access to the site:

> A second paved entrance to the development will be provided onto Carter Road at the northwest corner of the development, which satisfies the code requirement regarding secondary access (33 90.05(g)4).
>
> In order to provide emergency access for residents in the southern portion of the project, the construction access drive at southwest corner of the site (at Charles P. Bailey Road) will be converted to a stabilized emergency access point following construction activities.

Staff has reviewed the proposed solution and finds that the additional paved access point on Carter road, along with the additional stabilized emergency access point along Charles P. Bailey Road, meets the intent of the development regulations.

Correspondence from applicant's engineer:

June 5, 2023

As requested by the Planning Board, our client has explored the cost and feasibility associated with paving the additional portion of Eidson Drive, between the Davita Labs site, and the connection point at the southern end of Meadowlea Village. Some of the determined impacts are listed below:

- *Required design plans will need to be furnished for the roadway, drainage, and lighting facilities, including soil testing and surveying to support the design.*
- *Permitting for the road will be required through the City of Deland and the St. Johns River Water Management District.*
- *The required water retention area for the portion of Eidson Drive in question is adjacent to flooding and wetland areas, and could require additional permitting constraints if these areas cannot be avoided.*

Estimated costs for the public improvements are as follows:

734,000	*Construction Cost*
+ 73,400	*10% Contingency*
+120,000	*Surveying, Engineering, Environmental, Geotechnical*
+ 10,000	*Permit Fees*
$937,400	*Estimated Total*

$65,000 Additional FEMA Flood Study and Permitting Fees if it is determined that the nearby FEMA Floodplain is impacted by the roadway and requires FEMA map revisions. This permitting typically takes about a year to complete through FEMA's review.

The above costs are significant in relation to the project costs. Additionally, the design and permitting required would extend the project timeline by at least another 6 months and has some potential unknowns which could add even further delays. In the current construction pricing climate, this has the potential to drive the project costs even higher.

After consideration of the above items, Cove Communities has determined that full construction of Eidson Drive reduces the viability of the project and is not a good access solution for the project.

However, a second paved entrance to the development will be provided onto Carter Road at the NW corner of the development, which satisfies the city of Deland's ordinance # 33-90.05(g)4. Additionally, in recognizing that there is a need for residents in the southern portion of the project to have access in an emergency situation, an emergency access will be provided at the SW corner of the property onto the existing cleared Eidson Drive roadway. Also recognizing that it is not desirable for the residents to have construction traffic through the neighborhood, the emergency access location will function as the construction entrance during development of the project. Considering that both the emergency access, and the construction uses will need a reliable surface for medium to heavy vehicles, the soil in this section of unpaved Eidson Drive will be stabilized and compacted for heavy vehicle use, but will not be covered with any impervious materials. I've attached a copy of the Master Plan, on which the entrances noted above have been highlighted for reference.

As we are not proposing normal traffic be introduced onto Eidson Drive, no update the Traffic Impact Statement is expected to be necessary at this time.

We trust this information is helpful and alleviates the access concerns previously raised. Please feel free to contact me if you need anything further.

Sincerely,
Chris Gwin, P.E.

GRAPHIC SCALE

(IN FEET)
1 inch = 100 ft.

Meadowlea Village
A COVE COMMUNITY

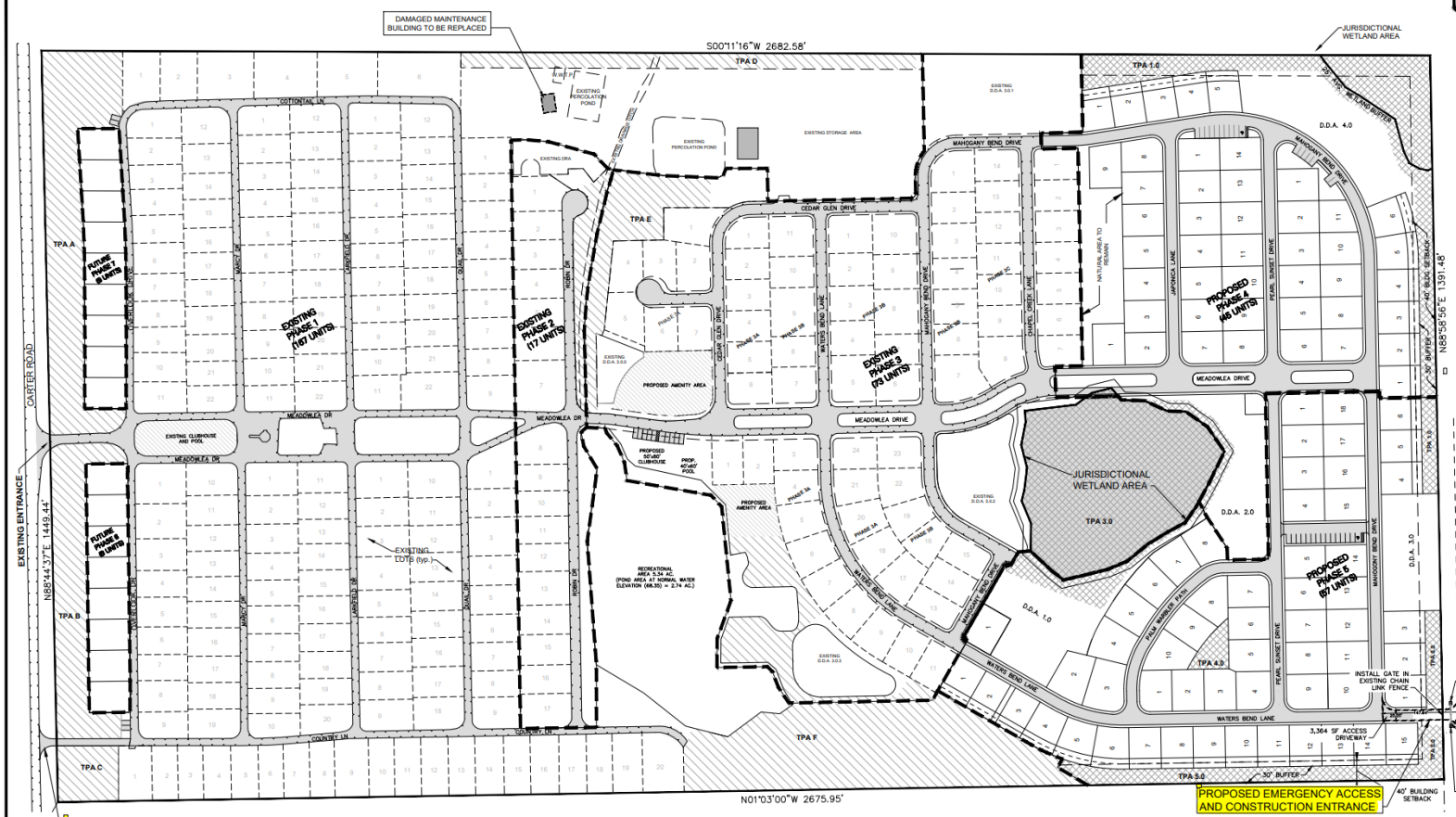

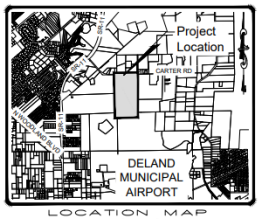

LOCATION MAP
SCALE: 1" = 4000'
DELAND, FLORIDA
SECTION 27, TOWNSHIP 16 SOUTH, RANGE 30 EAST

Site Information:

PROJECT NAME:	MEADOWLEA VILLAGE MASTER PLAN
PARCEL NUMBER:	6027-00-00-0110
PROJECT LOCATION:	1004 OVERLOOK DRIVE DELAND FLORIDA 32724 PH. (904)736-1853
OWNER:	MEADOWLEA VENTURE I LLC
CONTACT:	GARY TIMMONS
TELEPHONE:	(443) 497-7001
ADDRESS:	1801 SE 58TH AVE OCALA FL 34480
PROJECT ENGINEER:	MICHAEL W RADCLIFFE ENGINEERING INC. 2611 SE LAKE WEIR AVE. OCALA, FLORIDA 34471
TELEPHONE:	(352) 629-5500
SITE AREA:	3,812,910 SF (87.53 ACS)
APPROX ACREAGE PER PHASE AS FOLLOWS:	PHASE 1 = 1,682,152 SF (36.62 AC) PHASE 2 = 166,445 SF (3.82 AC) PHASE 3 = 911,014 SF (20.91 AC) PHASE 4 = 489,315 SF (11.23 AC) PHASE 5 = 482,455 SF (11.07 AC) PHASE 6 = 38,352 SF (0.88 AC) PHASE 7 = 43,198 SF (0.99 AC) TOTAL = 3,812,910 SF (87.53 AC)
ZONING:	RM (RESIDENTIAL MOBILE HOME PARK)
LAND USE:	MEDIUM DENSITY RESIDENTIAL

Notes:

1. THIS PROPERTY WAS ANNEXED INTO THE CITY OF DELAND ON 11/2/2020 WITH 257 EXISTING HOME SPACES.
2. MEADOWLEA VILLAGE IS A RENTAL MANUFACTURED HOME COMMUNITY WITH ALL LAND UNDER SINGLE OWNERSHIP.
3. WATER/SEWER FOR EXISTING PHASES 1-3 IS PROVIDED BY MEADOWLEA VILLAGE.

Parking Requirements:

RESIDENTIAL PARKING: 2 SPACES PER UNIT

VISITOR PARKING: 0.25 SPACE PER UNIT

REQUIRED: 102 UNITS = 26 SPACES
REQUIRED 1 HANDICAP SPACE PER 25 REGULAR SPACES

REQUIRED SPACES: 102 x 0.25 = 25.5 ≈ 26 SPACES

PROVIDED SPACES: 36 SPACES

TOTAL: 34 VISITOR SPACES + 2 H.C. SPACES = 36 SPACES

Tree Protection Area (T.P.A):

TPA IN EXISTING PHASES

TPA - A = 68,500 SF (1.57 AC)
TPA - B = 43,736 SF (1.01 AC)
TPA - C = 12,728 SF (0.29 AC)
TPA - D = 26,500 SF (0.61 AC)
TPA - E = 44,311 SF (1.02 AC)
TPA - F = 133,059 SF (3.05 AC)

EXISTING TPA AREA: 328,834 SF (7.55 AC)

EXISTING LAND AREA: 2,841,160 (65.22 AC)

328,834 SF (7.55 AC) / 2,841,160 (65.22 AC) = 11.57%

TPA IN PROPOSED PHASES

TPA - 1.0 = 68,517 SF (1.57 AC)
TPA - 2.0 = NOT USED
TPA - 3.0 = 120,147 SF (2.76 AC)
TPA - 4.0 = 4,517 SF (0.10 AC)
TPA - 5.0 = 31,516 SF (0.72 AC)

PROPOSED TPA AREA: 224,697 SF (5.16 AC)

PROPOSED LAND AREA: 971,388 SF (22.30 AC)

224,697 SF (5.16 AC)/ 971,388 SF (22.30 AC) = 23.13%

TPA OVER TOTAL PROPERTY (87.53 AC)

TOTAL LAND AREA: 3,812,905 SF (87.53 AC)

TOTAL TPA: 553,531 SF (12.71 AC)

553,531 SF (12.71 AC) / 3,812,905 SF (87.53 AC) = 14.52%

ALTHOUGH NOT REQUIRED FOR THE EXISTING PHASES, PROPOSED EXCESS TPA INCREASES THE OVERALL PROPERTY TPA TO 14.52%

- PHASE LINE
- ROAD NETWORK
- TREE PRESERVATION AREA (EXISTING PHASES)
- TREE PRESERVATION AREA (PROPOSED PHASES)

EXISTING PHASES	
PHASE #	YIELD
1	167 LOTS
2	17 LOTS
3	73 LOTS
TOTAL	257 LOTS

PROPOSED PHASES		
PHASE #	YIELD	ROAD LENGTH
4	45 LOTS	2,654 FT (.50 MILES)
5	57 LOTS	2,557 FT (.48 MILES)
6	8 LOTS	--0--
7	9 LOTS	--0--
TOTAL	119	5211 FT (0.98 MILES)

EXISTING + PROPOSED	257+119=376 TOTAL LOTS

ZONING = RM RESIDENTIAL MOBILE HOME	
MINIMUM WIDTH	30'
MINIMUM DEPTH	80'
SEPARATION FROM UNITS	15'
SEPARATION FROM ACCESSORY UNITS	10' FROM MOBILE HOMES
MAXIMUM IMPERVIOUS	50%
PERIMETER SETBACKS FOR MOBILE HOMES	40' FROM PROPERTY LINE
SETBACKS FOR MOBILE HOMES	15' FROM LOT LINES
ACCESSORY STRUCTURE SETBACKS	7.5' FROM LOT LINES

Date	By	Revisions
2/20/23	BIL	REVISED PER CITY OF DELAND COMMENTS.
3/16/23	BIL	REVISED PER CITY OF DELAND COMMENTS.
5/16/23	BIL	REVISED PER CITY OF DELAND COMMENTS.

Designed: MWR | Scale: 1" = 100'
Drawn: BIL | Project: 2022-04
Checked: MWR | Date: 10-14-2022
File: Meadowlea Village Ph. 4-7.dwg

MICHAEL W. RADCLIFFE ENGINEERING, INC.
Certificate No. 27-00018 • Water & Wastewater Plants • Potable & Reclaimed Water • Wells • Hydrants • Water Distribution & Sewer Collection Systems
2611 SE Lake Weir Avenue, Ocala, Florida 34471
www.radcliffeengineering.com

COPYRIGHT © 2023 Michael W. Radcliffe Engineering, Inc. All Rights Reserved.

Project Name: Meadowlea Village Ph. 4&5
Sheet name: Master Plan

Sheet No.
M001
of
M001

City of DeLand
Community Development

Memorandum

To: Planning Board

From: Carol Kuhn, AICP, Planning Director

Date: May 10, 2023

Re: Continuation of SP22-211 – Site Plan for Meadowlea Village Phases 4 & 5

On April 19, 2023, the Planning Board voted to continue the Meadowlea Village Phase 4 & 5 site plan to allow the applicant additional time to explore the feasibility of a secondary access point. However, the applicant needs additional time to prepare this information and has requested that this item be continued to a future date.

City of DeLand
PLANNING BOARD
SP22-211
APRIL 19, 2023
LARKFIELD DR
MEADOWLEA DR
ROBIN DR
CEDAR GLEN DR
WATERS BEND LN
MAHOGANY BEND DR
A-1A
R-M
M-1
M-1&A
DAV'TA WAY
SUBJECT PROPERTY
Legend:
City Zoning
County Zoning
N
Not to Scale

PLANNING STAFF REPORT
TO
CITY OF DELAND PLANNING BOARD
April 19, 2023

A. APPLICATION NO.: SP22-211

APPLICANT: Michael W. Radcliffe, Radcliffe Engineering

REQUEST: Class IV Site Plan – Meadowlea Village

APPLICABLE SECTIONS: Article XII, Section 33-132

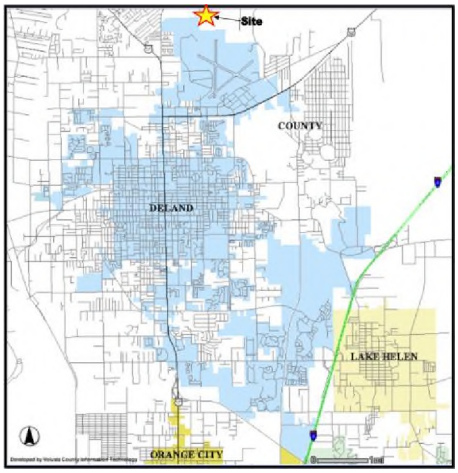

B. SITE CONDITIONS:

Location: East of SR 11, north of Municipal Airport

Parcel Size: 22.11 ± acres: Phase 4 = 10.17 ac., Phase 5 = 11.94 ac. (87.53 acres overall)

Existing Zoning: R-M (Residential Mobile Home)

Land use: Medium density residential

The site is located in the northern city limits north of the DeLand Municipal Airport and the property currently contains the existing Meadowlea Village, Phases 1-3. The applicant requests an expansion of the existing mobile home park to develop 103 additional mobile home spaces. The additional units will bring the total number of lots to 360. The development is an age restricted, 55+, development and the proposed lots will be age restricted as well.

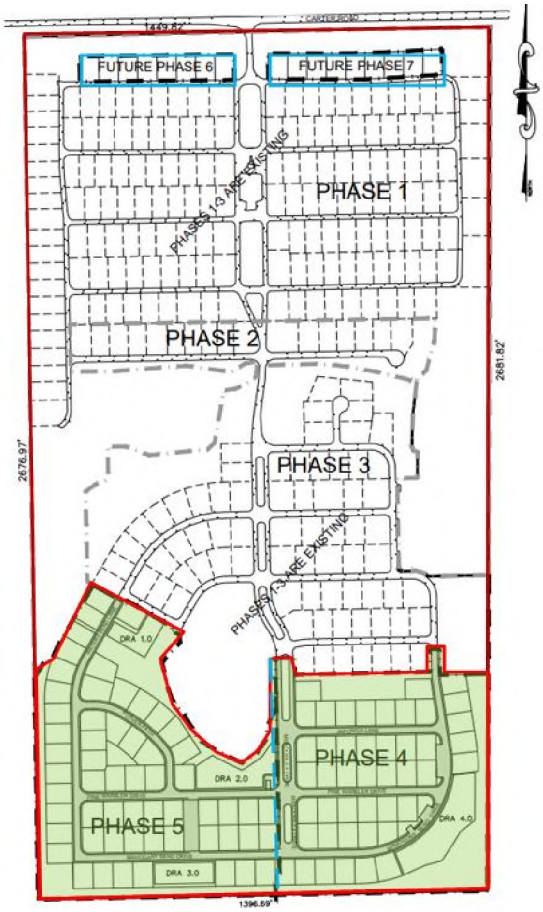

Two phases (4 & 5) are proposed, and these two phases are to be developed south of the existing residential development. Two additional future phases (6-7) are anticipated to be built at some point in the future and will contain 8 and 9 lots respectively. Phases 1-3 were developed under Volusia County regulations and the mobile home park was annexed into the City of DeLand on November 2, 2020.

C. LAND USE PLAN: In order to develop the property, the applicant is proposing the addition of utilities including water and sewer provided by the City of DeLand, creation of stormwater ponds and the addition of new roads to accommodate access to the new residential parcels.

The portion of this property in question for development is currently undeveloped, wooded and it is proposed to develop the lots surrounding a large wetland that is located in Phase 1 of the development. Per Section 33-58.08(l) of the Land Development Code, developments which require the issuance of a development order for a site plan or subdivision and have obtained a valid environmental resource permit from the St. Johns River Water Management District are exempt from the requirements of the provision of a protection and buffer zone. An application for a St. Johns River Water Management

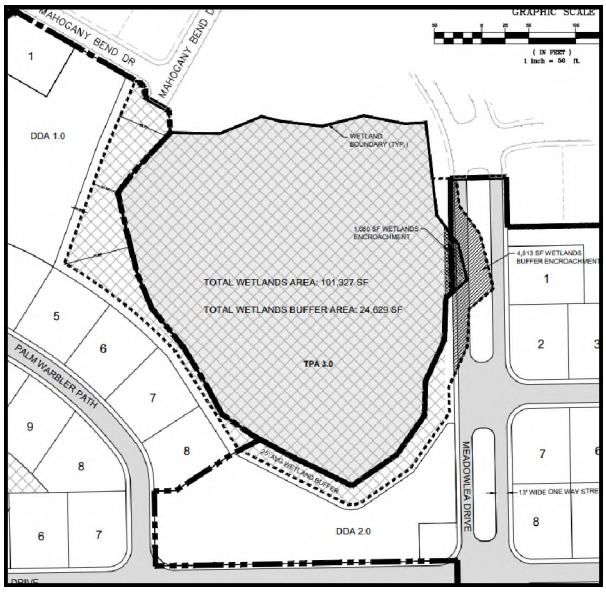

District permit has been submitted for the wetland impact and is to be provided to the City upon issuance. The wetland totals approximately 101,327 square feet in area (2.32 acres) with a buffer area of 24,629 square feet. The buffer provided averages 25 feet in width, and the buffer encroachment area totals 4,813 square feet.

Typical lot size is 62' x 80 feet and includes the mobile home structure and a carport that accommodates space for 2 vehicles. The development will include a total of 32 on-street/visitor parking spaces, including 2 handicapped spaces.

The mobile home park is not gated and access to the property is via County maintained Carter Road. A traffic analysis indicates that there will be an increase of 31 peak hour trips to a total of 108 PM peak hour trips, however, no TIA will be required because the volume is low. (At total buildout, the anticipated number of trips is estimated to be only 113 trips.) A driveway upgrade may be necessary and a county use permit has been applied for.

D. **ANALYSIS:** The overall development will be accomplished in a total of 7 phases with the ultimate completion of 376 lots total broken down as follows:

Phase 1	167 lots
Phase 2	17 lots
Phase 3	73 lots
Phase 4	**45 lots**
Phase 5	**57 lots**
Phase 6	8 lots
Phase 7	9 lots
TOTAL	**376**

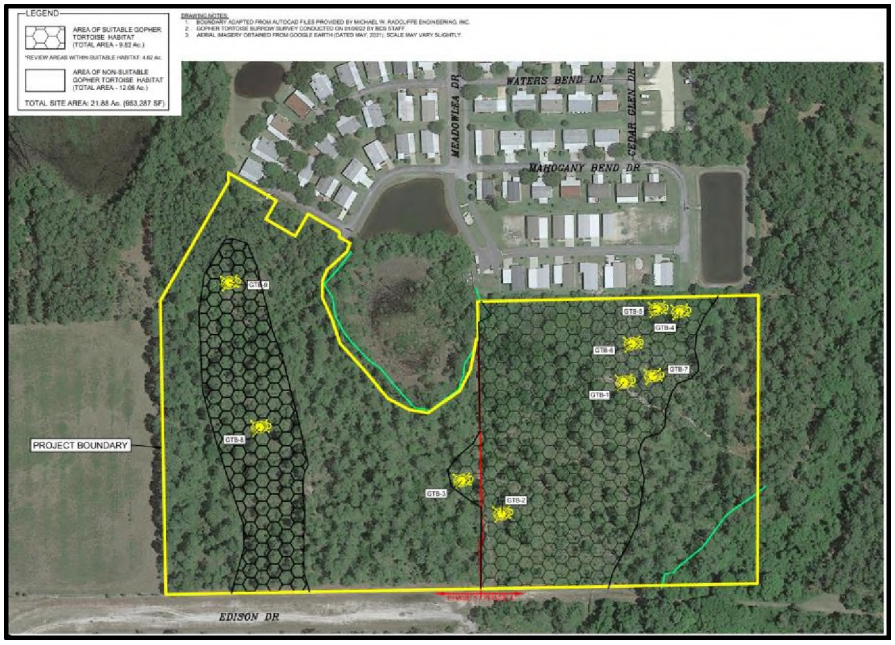

The Biological Survey Report indicated that in the survey conducted on January of 2022, a total of 9 gopher tortoise burrows were observed on-site and that 4 options were available to address the presence of tortoises.

1. Avoid developing in the area occupied by tortoises.

2. Develop as to avoid gopher tortoise burrows by avoiding concentrations of burrows altogether and/or staying at least 25 feet from entrances of individual burrows, provided that such activities do not harm gopher tortoise or violate rules protecting gopher tortoises

3. Relocate tortoises on-site (permit required); or

4. Relocate tortoises off-site (permit required)

The applicant stated that within 90 days of any site disturbance, a gopher tortoise burrow survey will be conducted, and the appropriate gopher relocation permit will be obtained from the Florida Fish and Wildlife Conservation Commission and any gopher tortoises found would be relocated.

- The zoning district (R-M) permits a maximum of 6 dwelling units per acre. The overall density once complete will be 4.29 units per acre (376 units/87.53 acres).

- Water and sewer services are provided by the City of DeLand.

- Parking is provided at a rate of 2 spaces/unit + .25/unit for visitors = 25.7 required. A total of 32 visitors spaces are provided.

- It is a requirement that 15% of the site be set aside for tree protection areas. These phases total 22.11 acres and the required TPA acreage would therefore be 3.31 acres. A total of 5.16 acres of TPA has been provided for these phases. Prior to approval of the final phases the applicant must verify that the eventual overall TPA area will meet or exceed the 15% for the entire development.

- Traffic generation/traffic impact - The additional units are expected to generate 31 pm peak hour trips. With the additional 103 units, Meadowlea will have a total of 360 units, and the trip generation will increase to 108 pm peak hour trips. The additional units don't require a TIA, per TPO TIA Guidelines, however, the additional volume at the driveway may warrant a driveway upgrade that will require a county use permit. A few years ago, the entrance taper was designed as large as possible without impacting the large concrete power pole at the entrance. Since then, the existing entrance has been functioning well. The County Use Permit is being submitted separately.

- School concurrency – Because this is a 55+ community, no School concurrency review is required.

At the November 17, 2022 meeting of the Technical Review Committee (TRC) the applicant was advised to address all comments and resubmittal to the Planning Board.

E. STAFF RECOMMENDATION:

Staff recommends approval of the Class IV Site Plan for Meadowlea Village Because of the size of the development, the final decision on all Class IV developments is made by the City Commission. The City Commission will hear the application at the May 15, 2023 meeting.

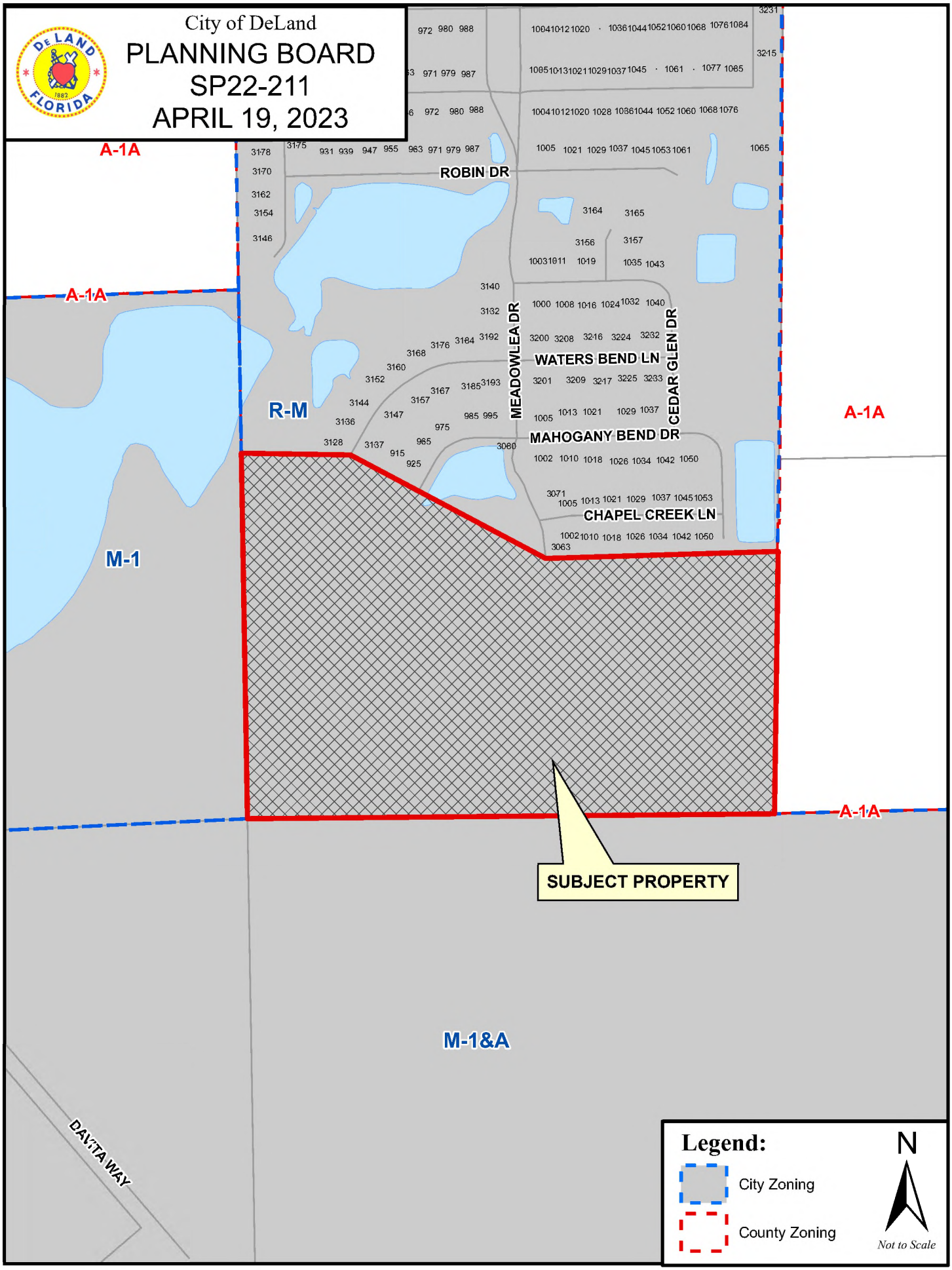
City of DeLand
PLANNING BOARD
SP22-211
APRIL 19, 2023
A-1A
A-1A
A-1A
A-1A
R-M
M-1
M-1&A
ROBIN DR
MEADOWLEA DR
WATERS BEND LN
CEDAR GLEN DR
MAHOGANY BEND DR
CHAPEL CREEK LN
DAVITA WAY
SUBJECT PROPERTY
Legend:
City Zoning
County Zoning
N
Not to Scale

MEADOWLEA MHP - PH. 4 & 5 SITE PLAN

CITY OF DELAND, FLORIDA

6027-00-00-0110

SECTION 27, TOWNSHIP 16 SOUTH, RANGE 30 EAST

General Notes:

1. THIS PROPERTY WAS ANNEXED INTO THE CIT OF DELAND ON 11/2/20
2. LAND USE = CMD (CITY MEDIUM DENSITY) ADOPTED ON 11/2/20 PER CITY OF DELAND PER LU20-088 TAX PARCEL #6027-00-00-0110
3. ZONING = R-M (RESIDENTIAL MOBILE HOME) ADOPTED ON 11/2/20 PER CITY OF DELAND PER ZZ0-089 TAX PARCEL #6027-00-00-0110
4. TOTAL PROPOSED PHASE 4 AREA = 11.10 ACRES
5. TOTAL PROPOSED PHASE 5 AREA = 11.20 ACRES
6. SURVEY INFORMATION PROVIDED BY ESP ASSOCIATES FL, INC. (SEE SEPARATE SURVEY SUPPLIED ALONG WITH THIS PLAN.) DATE OF SURVEY: MARCH 7, 2022.
7. UNLESS OTHERWISE SHOWN, UNDERGROUND IMPROVEMENTS NOT LOCATED. PUBLIC RECORDS NOT SEARCHED BY ESP ASSOCIATES FL, INC. ADDITIONS OR DELETIONS TO SURVEY MAPS BY OTHER THAT THE SIGNING PARTY OR PARTIES IS PROHIBITED WITHOUT WRITTEN CONSENT OF THE SIGNING PARTY OR PARTIES.
8. SUBJECT TO EASEMENTS, RIGHTS OF WAY, RESTRICTIONS, AND RESERVATIONS OF RECORD. ALL CONSTRUCTION COVERED BY THESE PLANS SHALL COMPLY WITH THE MATERIAL REQUIREMENTS AND QUALITY CONTROL STANDARDS CONTAINED IN THE CITY OF DELAND LAND DEVELOPMENT CODE. ALL CONSTRUCTION PERFORMED IN CITY OF DELAND RIGHT-OF-WAY REQUIRES A RIGHT-OF-WAY PERMIT, ALL CONSTRUCTION IN FDOT RIGHT-OF-WAY REQUIRES A PERMIT FROM FDOT.
9. ORIENTATION FOR THE IMPROVEMENTS SHOWN HEREON SHOULD NOT BE USED TO RECONSTRUCT BOUNDARY LINES. ADDITIONS OR DELETIONS TO SURVEY MAPS BY OTHER THAN THE SIGNING PARTY OR PARTIES IS PROHIBITED WITHOUT WRITTEN CONSENT OF THE SIGNING PARTY OR PARTIES.
10. REPRODUCTIONS OF THIS SKETCH ARE NOT VALID UNLESS SEALED WITH AN EMBOSSED ENGINEER'S SEAL.
11. SITE IS NOT LOCATED IN A HISTORIC PRESERVATION DISTRICT.
12. PROPERTY IS ZONED R-M; WITH MAX DENSITY OF 6 DWELLINGS PER ACRE
    OVERALL PROJECT DENSITY = 377/87.53 AC = 4.31 UNITS/ACRE
13. IMPROVEMENTS WILL BE CONSTRUCTED IN PHASES.
14. BUILDING SETBACKS = FRONT – 10 FEET
    REAR – 7.5 FEET
    SIDE – 7.5 FEET (15 FEET BETWEEN UNITS)
15. TOTAL ACREAGE PER PHASE AS FOLLOWS:

    PHASE 1 = 1,682,152 SF (38.62 AC)
    PHASE 2 = 166,445 SF (3.82 AC)
    PHASE 3 = 911,014 SF (20.91 AC)
    PHASE 4 = 483,516 SF (11.10 AC)
    PHASE 5 = 487,872 SF (11.20 AC)
    PHASE 6 = 38,352 SF (0.88 AC)
    PHASE 7 = 43,198 SF (0.99 AC)

    TOTAL = 3,812,910 SF (87.53 AC)
16. TOTAL SPACES AS FOLLOWS:

    PHASE 1 = 167 LOTS
    PHASE 2 = 17 LOTS
    PHASE 3 = 73 LOTS
    PHASE 4 = 45 LOTS
    PHASE 5 = 57 LOTS
    PHASE 6 = 8 LOTS
    PHASE 7 = 9 LOTS
    TOTAL = 376 LOTS
17. TOTAL PHASE 4 DENSITY = 45 units / 11.10 developed acres = 4.05 UNITS/ACRE

    % BUILDING COVERAGE = 2.83 AC / 11.10 AC x 100 = 25.50 %
18. TOTAL PHASE 5 DENSITY = 57 units / 11.20 developed acres = 5.14 UNITS/ACRE

    BUILDING COVERAGE = 3.58 AC / 11.20 AC x 100 = 31.96 %
19. NOTE : TOTAL PROPOSED DENSITY (PH 4, 5) = 4.57
20. FIRE HYDRANTS ARE REQUIRED WITHIN 800 FEET OF THE EXTERIOR REMOTE PORTION OF ANY PROPOSED BUILDING. CLEARANCES SHALL BE MAINTAINED OF SEVEN AND ONE HALF FEET (7'-6") IN FRONT OF AND TO THE SIDES OF EVERY FIRE HYDRANT, WITH FOUR FEET (4'-0") CLEARANCE TO THE REAR OF THE HYDRANT.
21. NO FENCE WITH FOUNDATIONS WILL BE ALLOWED TO BE INSTALLED WITHIN SANITARY SEWER EASEMENTS.
22. EASEMENTS WILL BE RECORDED AS REQUIRED.
23. ALL CONSTRUCTION COVERED BY THESE PLANS SHALL COMPLY WITH THE MATERIAL REQUIREMENTS AND QUALITY CONTROL STANDARDS CONTAINED IN THE CITY OF DELAND LAND DEVELOPMENT REGULATIONS.
24. ALL UTILITY CONSTRUCTION SHALL CONFORM TO THE CITY OF DELAND STANDARD SPECIFICATIONS FOR WATER AND SEWER CONSTRUCTION, LATEST REVISION.
25. THE SITE CONTRACTOR IS RESPONSIBLE FOR CONSTRUCTION IN ACCORDANCE WITH THE APPROPRIATE LISTED CONSTRUCTION REFERENCES.
26. UTILITIES SHOWN HEREIN HAVE BEEN LOCATED BASED ON ABOVE GROUND EXISTENCE OF STRUCTURES. ACTUAL LOCATION OF UNDERGROUND UTILITIES IS UNKNOWN. THE CONTRACTOR SHALL BE RESPONSIBLE FOR VERIFYING THE LOCATION OF ALL EXISTING UTILITIES SHOWN OR NOT SHOWN THROUGH DIRECT CONTACT WITH THE APPROPRIATE UTILITY COMPANY. SUCH CONTACT SHALL BE MAINTAINED THROUGHOUT THE LIFE OF THE PROJECT. ANY UTILITIES OBSTRUCTIVE TO THE SITE CONTRACTORS OPERATION ARE TO BE RELOCATED BY THE APPROPRIATE UTILITY COMPANY.
27. ALL SECTION, BLOCK, AND PROPERTY CORNERS DISTURBED OR DESTROYED BY CONSTRUCTION OPERATIONS SHALL BE REPLACED BY A FLORIDA REGISTERED SURVEYOR AT THE CONTRACTOR'S EXPENSE.
28. COPIES OF THESE PLANS AS DESIGNED BY THE PROFESSIONAL ENGINEER OF RECORD HAVE BEEN RETAINED BY THE PROFESSIONAL ENGINEER AND THEY WILL NOT BE RESPONSIBLE FOR ANY SUBSEQUENT CHANGES TO THE REPRODUCIBLE ORIGINAL DOCUMENTS.
29. CONCURRENCY WILL BE MET IN ACCORDANCE WITH THE CITY REQUIREMENTS. ANY AMOUNTS DUE FOR CONCURRENCY REQUIREMENTS MUST BE PAID AT FINAL C.O. UNLESS ALL REQUIRED INFRASTRUCTURE IS INSTALLED PRIOR TO THE ISSUANCE OF THE FIRST BUILDING PERMIT.
30. FDEP CLEARANCES FOR WATER AND SEWER MUST BE SUBMITTED TO THE CITY OF DELAND PRIOR TO OBTAINING A CERTIFICATE OF OCCUPANCY.
31. AS-BUILT PLANS ARE REQUIRED TO BE SUBMITTED TO THE CITY OF DELAND AND SHALL MEET THE MINIMUM CITY STANDARD REQUIREMENTS FOR ALL WATER AND/OR SEWER CONSTRUCTION.
32. PRIOR TO THE START OF CONSTRUCTION, THE PROJECT ENGINEER SHALL SCHEDULE A PRE-CONSTRUCTION MEETING WITH THE CITY OF DELAND DEVELOPMENT COORDINATOR. THE MEETING WILL TAKE PLACE AT THE CITY GROWTH MANAGEMENT DEPARTMENT WITH THE ENGINEER, CONTRACTOR AND STAFF. NO SITE WORK SHALL COMMENCE PRIOR TO THIS MEETING TAKING PLACE.
33. ALL STORM WATER MANAGEMENT SYSTEMS SHALL BE SUBSTANTIALLY COMPLETED PRIOR TO THE CONSTRUCTION OF IMPERVIOUS AREAS.
34. CONTRACTOR SHALL PERIODICALLY SWEEP EXISTING ON-SITE PAVED SURFACES AS WELL AS ALL ABUTTING CITY STREETS, COUNTY ROADS AND STATE HIGHWAYS (AS APPROPRIATE FOR THE PARTICULAR PROJECT) TO KEEP THOSE SURFACES IN A SUBSTANTIALLY SEDIMENT-FREE CONDITION. SWEEPING SHALL BE DONE ON A PERIODIC, AS-NEEDED BASIS THROUGHOUT THE WORK WEEK INCLUDING, MOST IMPORTANTLY, AFTER EVERY RAIN EVENT AND EVERY FRIDAY AFTERNOON PRIOR TO CEASING WORK FOR THE WEEK.
35. CONTRACTOR SHALL DEVELOP AND IMPLEMENT A PLAN TO ASSURE THAT ALL WASTE, SUCH AS DISCARDED BUILDING MATERIALS, CONCRETE TRUCK WASH-OUT, CHEMICALS, LITTER AND SANITARY WASTE, ARE PROPERLY CONTROLLED WHILE ON-SITE AND TRANSPORTED AND DISPOSED OF (OFF-SITE) IN ACCORDANCE WITH ALL APPLICABLE LOCAL, STATE AND FEDERAL REGULATIONS. NO WASTE MATERIALS OF ANY KIND ARE PERMITTED TO BE BURIED ON-SITE OR DISCHARGED TO SURFACE WATERS OF THE STATE OR TO THE MUNICIPAL STORM WATER SYSTEM.

Sanitary Sewer:

SANITARY SEWER TO BE PROVIDED BY CITY OF DELAND

ANTICIPATED SANITARY SEWER DEMANDS:
103 MOBILE HOMES x 260 G.P.D. x 0.667 (FOR 2 BR) = 17,862 G.P.D

Potable Water:

POTABLE WATER TO BE PROVIDED BY CITY OF DELAND

ANTICIPATED DEMANDS:
103 MOBILE HOMES x 300 G.P.D. x 0.667 (FOR 2 BR) = 20,610 G.P.D.

Reclaimed Water:

CITY OF DELAND'S RECLAIMED WATER WILL BE USED FOR IRRIGATION.

Drainage Design Criteria:

ALL DRAINAGE STRUCTURE INVERTS SHALL BE GROUTED TO ELIMINATE SUMP CONDITIONS UNLESS OTHERWISE INDICATED. SEE SHEET 4 OF FDOT STANDARD PLAN 425-001 FOR REFERENCE.

ST. JOHNS RIVER WATER MANAGEMENT DISTRICT REQUIREMENTS FOR WET DETENTION WERE USED FOR THE DESIGN OF PHASE 4 & 5

DESIGN CRITERIA OF CHAPTER 40C-40 USED IN PHASE 4 & 5 ARE AS FOLLOWS:

1. DETENTION OF THE GREATER OF 1" OF RUNOFF WITHIN THE PROJECT'S DRAINAGE AREA OR 2.5" OF RUNOFF FROM ALL IMPERVIOUS AREA WITHIN A DRAINAGE AREA.
2. RECOVERY OF ONE-HALF OF THE REQUIRED VOLUME BETWEEN 24 AND 30 HOURS
3. A PERMANENT POOL VOLUME (PPV) TO PROVIDE A MINIMUM OF 21 DAYS RESIDENCE TIME. (SECTION 29.1; APPLICANTS HANDBOOK). PONDS PROVIDING 21 DAYS (50% ABOVE MINIMUM) OR GREATER RESIDENCE TIME ARE NOT REQUIRED TO ESTABLISH AND MAINTAIN VEGETATIVE LITTORAL ZONES. (SEC. 14.7; APPLICANTS HANDBOOK)
4. MAXIMUM DEPTH OF 12 FEET.
5. MEAN DEPTH BETWEEN 2 AND 8 FEET (SEC. 29.3; APPLICANTS HANDBOOK)

THE WET DETENTION DRAINAGE SYSTEM FOR PHASES 4 & 5 MEET THESE CRITERIA.

CITY OF DELAND'S 25 YEAR/24 HOUR STORM REQUIREMENTS ARE ALSO MET.

SEE STORMWATER REPORT FOR CALCULATIONS.

Flood Certification:

THIS PROPERTY IS IN A ZONE "X" (AREA OF MINIMAL FLOODING) AND ZONE "A" PER FEMA PANEL 12127C0460H ACCORDING TO THE FEDERAL EMERGENCY MANAGEMENT ADMINISTRATION (FEMA).

ZONE "A" ESTIMATED AT ELEVATION 69.0

Soil Conditions:

HYDROLOGIC SOIL GROUPS CONSISTS OF:

CASSIA FINE SAND – "A" SOIL TYPE
SMYRNA-SMYRNA – "A/D" SOIL TYPE

Drainage Facility Maintenance:

OWNER WILL BE RESPONSIBLE FOR MAINTAINING ON-SITE DRAINAGE FACILITIES WHICH INCLUDES MOWING DRAINAGE SWALES/BERMS ON A REGULAR BASIS.

Fire Protection:

1. FIRE HYDRANTS WILL BE INSTALLED TO PROVIDE COVERAGE OF BUILDINGS. SEE PLANS FOR LOCATIONS.
2. FIRE HYDRANTS MAXIMUM DISTANCE TO CLOSEST POINT ON A BUILDING = 600'. MAXIMUM DISTANCE BETWEEN FIRE HYDRANTS = 800'.
3. MINIMUM 6" WATER MAIN (SEE WATER-SEWER PLAN) TO PROVIDE FIRE FLOW TO HYDRANTS. FIRE DEPARTMENT CONNECTIONS AND BACK FLOW PREVENTION DEVICES TO BE INSTALLED AS REQUIRED BY FIRE MARSHALL.

Tree Protection Area (T.P.A):

TPA IN EXISTING PHASES

TPA – A = 12,728 SF (0.29 AC)
TPA – B = 26,500 SF (0.61 AC)
TPA – C = 44,311 SF (1.02 AC)
TPA – D = 26,500 SF (0.61 AC)
TPA – E = 44,311 SF (1.02 AC)
TPA – F = 133,059 SF (3.05 AC)

EXISTING TPA AREA: 328,834 SF (13.45 AC)

EXISTING LAND AREA: 2,841,160 (65.22 AC)

328,834 SF (13.45 AC) / 2,841,160 (65.22 AC) = 11.57%

TPA IN PROPOSED PHASES

TPA – 1.0 = 69,213 SF (1.59 AC)
TPA – 2.0 = NOT USED
TPA – 3.0 = 119,843 SF (2.75 AC)
TPA – 4.0 = 4,517 SF (0.10 AC)
TPA – 5.0 = 31,516 SF (0.72 AC)

PROPOSED TPA AREA: 225,089 SF (5.17 AC)

PROPOSED LAND AREA: 971,388 SF (22.30 AC)

225,089 SF (5.17 AC)/ 971,388 SF (22.30 AC) = 23.17%

TPA OVER TOTAL PROPERTY (87.33 AC)

TOTAL LAND AREA: 3,812,905 SF (87.53 AC)

TOTAL TPA: 553,923 SF (12.72 AC)

553,923 SF (12.72 AC) / 3,812,905 SF (87.53 AC) = 14.53%

ALTHOUGH NOT REQUIRED FOR THE EXISTING PHASES, PROPOSED EXCESS TPA INCREASES THE OVERALL PROPERTY TPA TO 14.53%

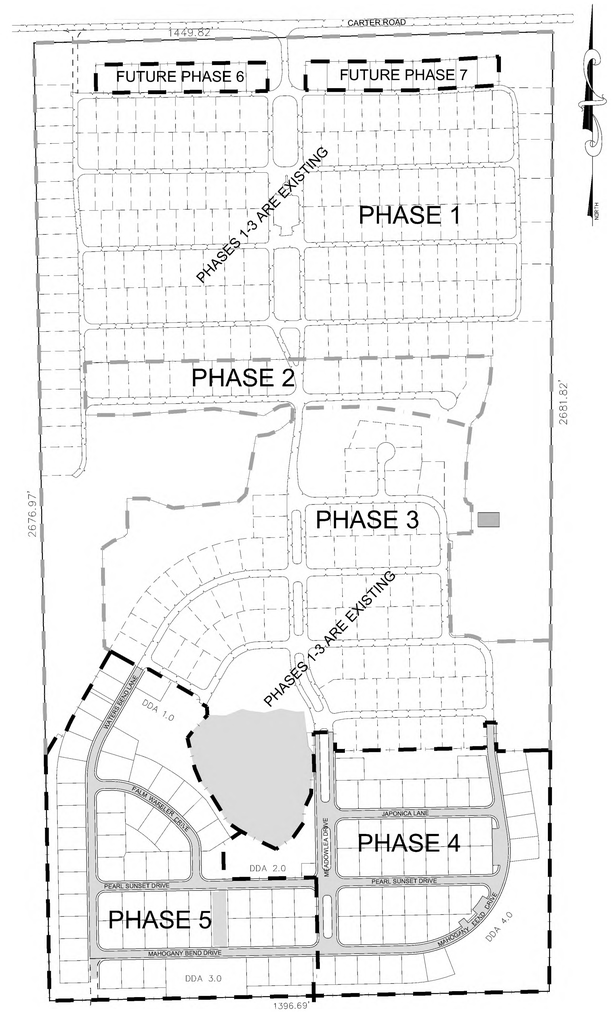

Legal Description:

THE WEST 1/2 OF THE NORTHWEST 1/4 OF SECTION 27, TOWNSHIP 16 SOUTH, RANGE 30 EAST, VOLUSIA COUNTY, FLORIDA; LESS AND EXCEPT THAT PART LYING IN COUNTY ROAD.

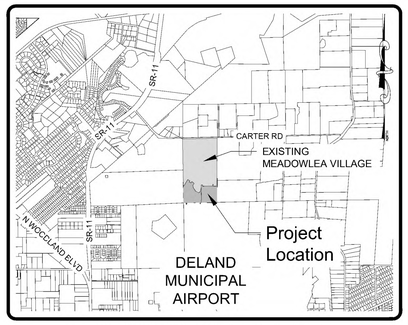

LOCATION MAP
SCALE: 1" = 3000'
DELAND, FLORIDA
SECTION 27, TOWNSHIP 16 SOUTH, RANGE 30 EAST

Site Information:

PROJECT NAME:	MEADOWLEA MASTER PLAN
PARCEL NUMBER:	6027-00-00-0110
PROJECT LOCATION:	1004 OVERLOOK DRIVE DELAND FLORIDA 32724 PH. (904)736-1853
OWNER:	MEADOWLEA VENTURE 1 LLC
CONTACT:	GARY TIMMONS
TELEPHONE:	(443) 497-7001
ADDRESS:	1901 SE 58TH AVE OCALA FL, 34480
PROJECT ENGINEER:	MICHAEL W RADCLIFFE ENGINEERING INC. 2611 SE LAKE WEIR AVE. OCALA, FLORIDA 34471
CONTACT:	CHRIS GWIN, P.E
TELEPHONE:	(352) 629-5500
TOTAL MEADOWLEA PARCEL AREA:	3,812,910 SF (87.53 AC)
TOTAL PROPOSED PH. 4 & 5 AREA:	971,749 SF (22.30 AC)
PH. 4 & 5 IMPERVIOUS AREA:	384,297 S.F. (8.82 AC.)
ZONING:	R-M
MINIMUM MOBILE HOME LOT WIDTH	30 FEET
MINIMUM MOBILE HOME LOT DEPTH	80 FEET
LAND USE:	RESIDENTIAL MOBILE HOME DISTRICT
SETBACKS:	10' FRONT SETBACK (FROM EOP) 15' SIDE SETBACKS 15' REAR SETBACK 40' BUILDING SETBACK (FROM ANY PROJECT PERIMETER PROPERTY LINE)
BUILDING(S) HEIGHT:	1 STORY

Statement of Intent:

INFRASTRUCTURE AND CONSTRUCTION FOR DEVELOPMENT OF 103 MOBILE HOME LOTS AND ACCESSORY AMENITY FACILITIES ADDED TO EXISTING MOBILE HOME PARK. MEADOWLEA VILLAGE IS AN ADULT 55+ COMMUNITY.

Index of Sheets:

C001	COVER SHEET
M001	MASTER PLAN
C002	DETAILS
C003	DRAINAGE PLAN
C004	DRAINAGE DETENTION AREAS
C005	GRADING PLAN
C006	SITE PLAN
C007	UTILITIES PLAN
C008	LANDSCAPE AND IRRIGATION
C009	TREE PLAN
C010	TREE CHART
C011	TREE DETAILS
C012-19	PLAN AND PROFILES
C020	SIGNAGE AND STRIPING
C021	SWPPP
S001-3	SURVEY
10 PAGES	CITY OF DELAND UTILITY DETAILS
# PAGES	FDOT STANDARD PLANS INDEX

Date:	By:	Reasons:
3/27/23	BIL	REVISED PER CIT OF DELAND COMMENTS.

Assigned: MWR | Scale: N/A
Drawn: BIL | Project: 2022-04
Checked: MWR | Date: 10-14-2022
File: Meadowlea Village Ph. 4-7.dwg

MICHAEL W. RADCLIFFE ENGINEERING, INC.
2611 S.E. Lake Weir Avenue Ocala, FL 34471 (352) 629-5500 FAX (352) 629-1010
Certificate No. EB-0006198 • Michael W. Radcliffe P.E. #31170 • Christopher A. Gwin P.E. #66568
www.radcliffeengineering.com

Copyright © 2023 Michael W. Radcliffe Engineering, Inc. All Rights Reserved

Project Name: Meadowlea Village Ph. 4&5
Sheet Name: Cover Sheet

Revisions to Plan Set
THIS DATE INDICATES THE LATEST DATE AT WHICH ANY PART OF THIS PLAN SET WAS REVISED.
Date: 3-27-23

Sheet No.
C001
of
C021

X:\MWRE Projects\Meadowlea MHP\2022-04 Meadowlea Village Ph. 4-7\Design\CADD\Meadowlea Village Ph. 4-7.dwg 3/28/2023 1:23 PM

Meadowlea Village
A COVE COMMUNITY

MEADOWLEA MHP - PH. 4-7 SITE PLAN
CITY OF DELAND, FLORIDA

ALL AREAS OUTSIDE THE PAVEMENT LIMITS SHALL BE SODDED

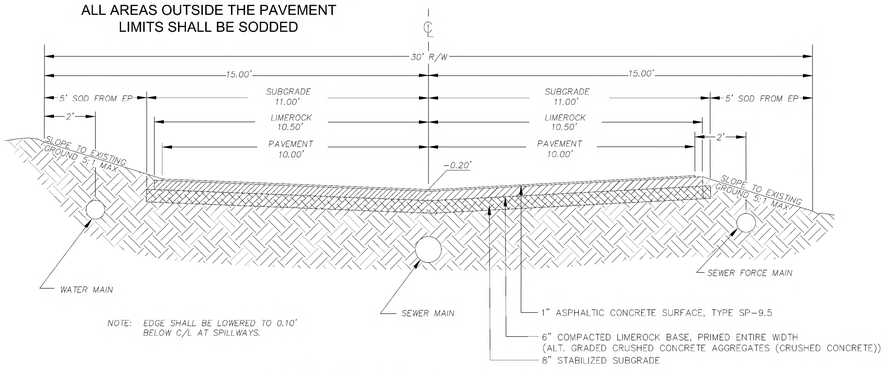

NOTE: EDGE SHALL BE LOWERED TO 0.10' BELOW C/L AT SPILLWAYS.

TYPICAL PAVEMENT SECTION INVERTED CROWN
Not to Scale

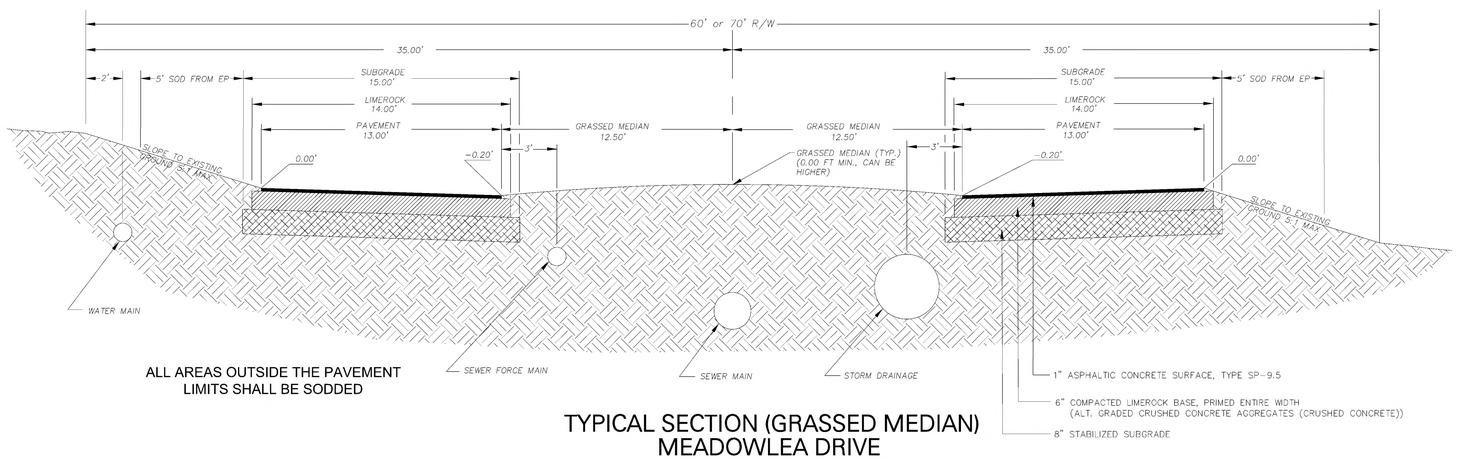

ALL AREAS OUTSIDE THE PAVEMENT LIMITS SHALL BE SODDED

TYPICAL SECTION (GRASSED MEDIAN) MEADOWLEA DRIVE
Not to Scale

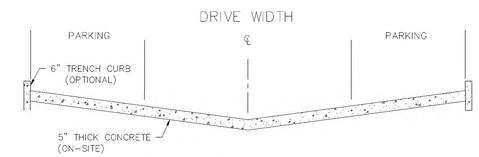

Concrete Drive Detail
Not To Scale

CONCRETE DRIVE CONSTRUCTION NOTE:

ALL CONCRETE TO BE 3,000 psi, 5" THICK WITH 6"X6"W1.4/W1.4 WWF OVER 6" STABILIZED SUBGRADE. (USE 6" THICK CONCRETE WITHIN RIGHT-OF-WAY)

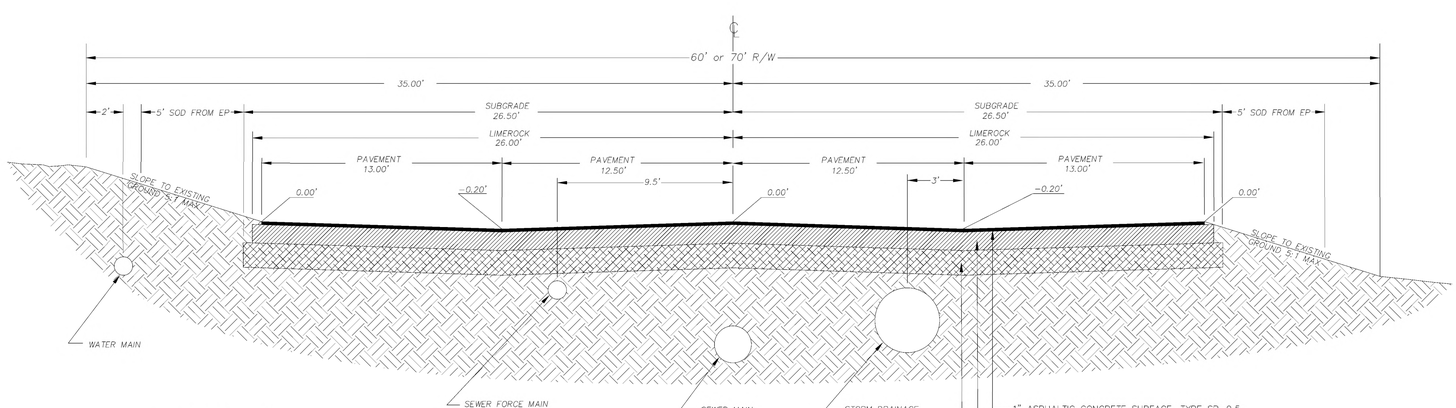

ALL AREAS OUTSIDE THE PAVEMENT LIMITS SHALL BE SODDED

TYPICAL SECTION (PAVED MEDIAN) MEADOWLEA DRIVE
Not to Scale

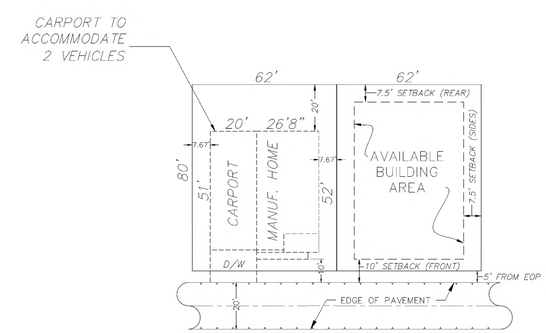

TYPICAL SPACE LAYOUT
Not To Scale

SETBACKS PER DELAND MUNICODE 33-17.11

SETBACKS FROM BOUNDARIES/BUILDING SEPARATION/IMPERVIOUS SURFACE LIMITATIONS

ACCESSORY STRUCTURE SETBACKS: NO MOBILE HOME ACCESSORY STRUCTURE SHALL BE CLOSER THAN 7.5 FEET TO ANY REAR OR SIDE MOBILE HOME LOT.

SETBACKS FROM INTERNAL STREETS: TEN FEET FROM EDGE OF PAVEMENT.

Date:	By:	Revisions:
3/27/23	BIL	REVISED PER CIT OF DELAND COMMENTS

Designed: MWR
Drawn: BIL
Checked: MWR
Scale: N.T.S.
Project: 2022-04
Date: 10-14-2022
File: Meadowlea Village Ph. 4-7.dwg

MICHAEL W. RADCLIFFE ENGINEERING, INC.
2611 S.E. Lake Weir Avenue Ocala, FL 34471 (352) 629-5500 FAX (352) 629-1010
Certificate No. EB-0006198 • Michael W. Radcliffe P.E. #31170 • Christopher A. Davis P.E. #65568
www.radcliffeengineering.com

Copyright © 2023 Michael W. Radcliffe Engineering, Inc. All Rights Reserved

Project Name: Meadowlea Village Ph. 4&5
Sheet Name: Details

Sheet No. C002 of C021

X:\MWRE Projects\Meadowlea MHP\2022-04 Meadowlea Village Ph. 4-7\dwg\CAD\Meadowlea Village Ph. 4-7.dwg 3/28/2023 12:33 PM

Meadowlea Village
A COVE COMMUNITY

MEADOWLEA MHP - PH. 4-7 SITE PLAN
CITY OF DELAND, FLORIDA

DRAINAGE SYSTEM STRUCTURES

S-1.1.0
18" Concrete MES
Northing: 1,726,123.96
Easting: 562,973.65
Inv. 62.00

S-1.1.1
FDOT Type E Inlet
Northing: 1,726,140.63
Easting: 562,932.48
Grate El. 69.11
E Inv. Out 66.90 (P-(27))

S-1.2.0
FDOT Type E Inlet
Northing: 1,726,129.32
Easting: 563,106.35
Grate El. 208.60
E Inv. Out 68.00 (P-(48) (1))

S-1.2.1
FDOT Type E Inlet
Northing: 1,726,124.80
Easting: 563,120.62
Grate El. 68.50

S-2.1.0
18" Concrete MES
Northing: 1,725,711.03
Easting: 563,273.58
Inv. 61.00

S-2.1.1
FDOT Type E Inlet
Northing: 1,725,667.06
Easting: 563,274.31
Grate El. 70.60
N Inv. Out 66.70 (P-(28))

S-2.2.0
18" Concrete MES
Northing: 1,725,765.57
Easting: 563,472.68
Inv. 62.00

S-2.2.1
FDOT Type E Inlet
Northing: 1,725,766.41
Easting: 563,517.83
Grate El. 69.75
W Inv. Out 65.56 (P-(30))

S-3.1.0
18" Concrete MES
Northing: 1,725,434.89
Easting: 563,119.76
Inv. 60.00

S-3.1.1
FDOT Type E Inlet
Northing: 1,725,474.19
Easting: 563,119.46
Grate El. 68.70
S Inv. Out 64.50 (P-(24))

S-3.2.0
FDOT Type C Inlet
Northing: 1,725,382.31
Easting: 563,290.98
Grate El. 69.50
E Inv. Out 66.60 (P-(37))

3.2.1
6" Concrete MES
Northing: 1,725,407.06
Easting: 563,890.93
Inv. 64.53

S-4.1.0
18" Concrete MES
Northing: 1,725,666.64
Easting: 564,051.71
Inv. 57.50

S-4.1.1
FDOT Type E Inlet
Northing: 1,725,680.76
Easting: 564,015.26
Grate El. 65.15
N Inv. In. 59.05 (P-(35))
E Inv. Out 60.00 (P-(29))

S-4.1.2
FDOT Type E Inlet
Northing: 1,725,870.62
Easting: 564,013.49
Grate El. 66.17
S Inv. Out 60.00 (P-(35))

S-4.2.0
24" Concrete MES
Northing: 1,725,482.26
Easting: 563,904.72
Inv. 57.50

S-4.2.1
FDOT Type E Inlet
Northing: 1,725,513.72
Easting: 563,872.86
Grate El. 65.00
W Inv. In. 60.00 (P-(31))
SE Inv. Out 59.75 (P-(32))

S-4.2.2
FDOT Type E Inlet
Northing: 1,725,489.88
Easting: 563,666.92
Grate El. 66.92
E Inv. Out 61.00 (P-(31))

DRA OVERFLOW STRUCTURES

S-2.3.0
24" x 24" Yard Inlet
Northing: 1,725,731.97
Easting: 563,366.72
Grate El. 70.60
NW Inv. In 68.0 (1 3/8 Orifice)
NE Inv. Out 69.22 (P-(48))

S-2.3.1
6" Concrete MES
Northing: 1,725,744.20
Easting: 563,372.97
Inv. 69.08

S-3.2.0
24" x 24" Yard Inlet
Northing: 1,725,382.31
Easting: 563,290.98
Grate El. 69.50
N Inv. In 66.6 (1 1/4 Orifice)
E Inv. Out 66.60 (P-(37))

3.2.1
6" Concrete MES
Northing: 1,725,407.06
Easting: 563,890.93
Inv. 64.53

S-4.3.0
FDOT Type C Inlet
Northing: 1,725,580.38
Easting: 564,084.60
Grate El. 64.65
SE Inv. In (2 1/8 Orifice)
SE Inv. Out 62.50 (P-(42))

S-4.3.1
6" Concrete MES
Northing: 1,725,566.09
Easting: 564,095.82
Inv. 61.92

GRAPHIC SCALE
60 0 30 60 120 240
(IN FEET)
1 inch = 60 ft.

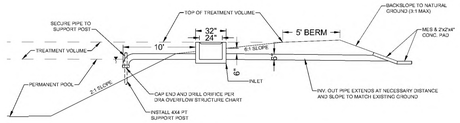

INLET DETAIL (TYP.)
Not To Scale

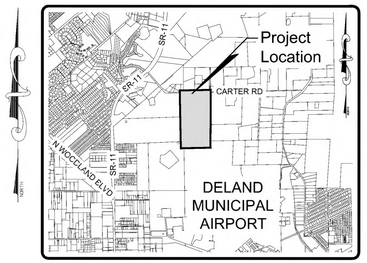

LOCATION MAP
SCALE: 1" = 4000'
DELAND, FLORIDA
SECTION 27, TOWNSHIP 16 SOUTH, RANGE 30 EAST

Legend:

- -65- = CONTOUR LABEL
- = FEMA ZONES
- = WETLAND BOUNDARY
- = WETLAND BUFFER
- = EXISTING CONTOUR (MJR)
- = EXISITNG CONTOUR (MNR)
- = PROPOSED SILT FENCE
- = DRAINAGE BASIN BOUNDARY
- = SUB BASIN BOUNDARY
- = PROP BLEED DOWN CLEANOUT
- = PHASE LINE
- C-C C-C = D.D.A. CROSS SECTION LOCATION (SEE D.D.A. SECTIONS SHEET C004)

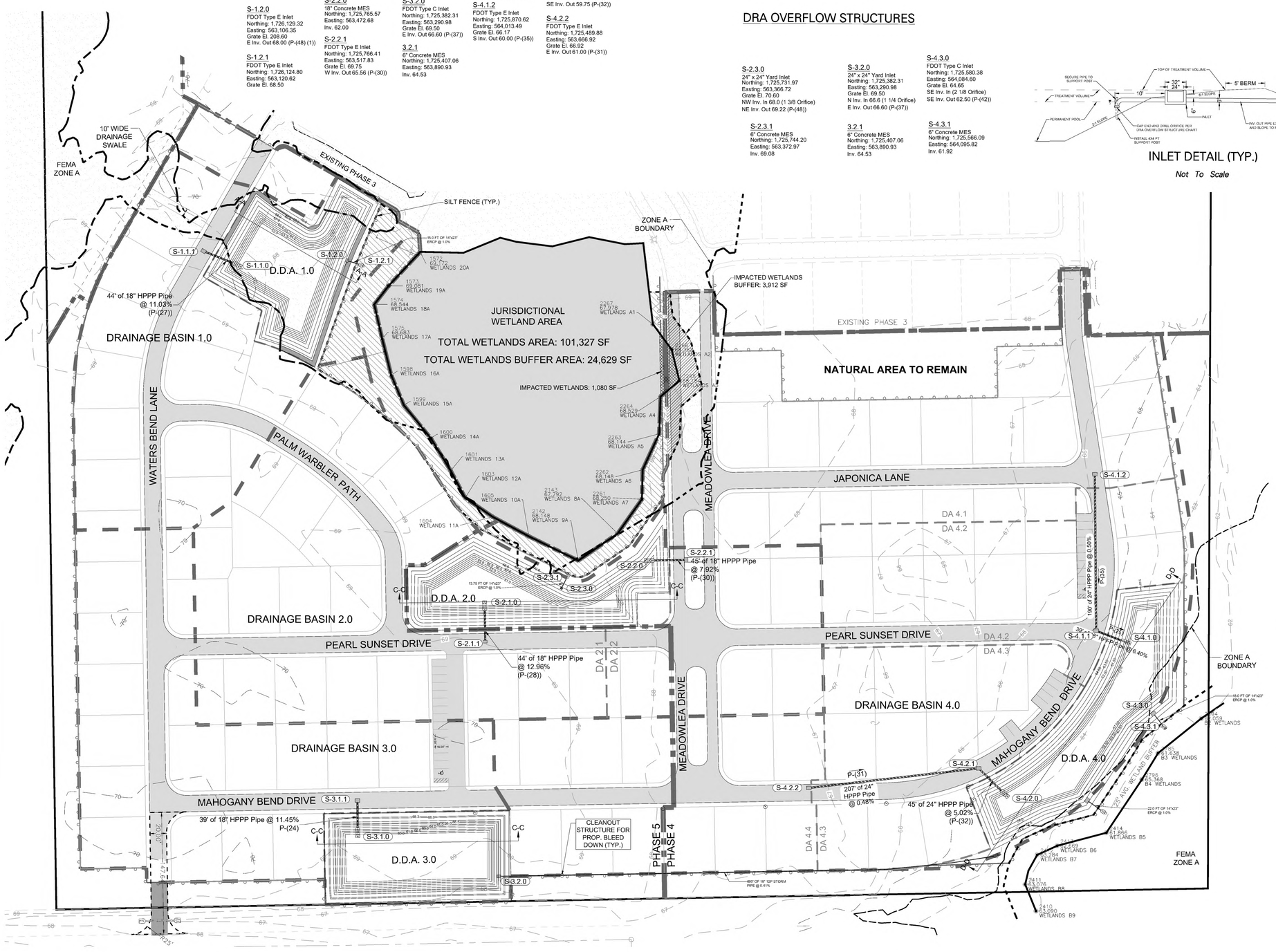

DRAINAGE BASIN 1.0
TOTAL AREA – 117,248 SF
TOTAL IMPERV. – 59,625 SF

DRAINAGE BASIN 2.1
TOTAL AREA – 131,865 SF
TOTAL IMPERV. – 68,530 SF

DRAINAGE BASIN 2.2
TOTAL AREA – 46,511 SF
TOTAL IMPERV. – 25,607 SF

DRAINAGE BASIN 3.0
TOTAL AREA – 140,086 SF
TOTAL IMPERV. – 66,033 SF

DRAINAGE BASIN 4.1
TOTAL AREA – 145,977 SF
TOTAL IMPERV. – 70,070 SF

DRAINAGE BASIN 4.2
TOTAL AREA – 66,753 SF
TOTAL IMPERV. – 40,205 SF

DRAINAGE BASIN 4.3
TOTAL AREA – 65,647 SF
TOTAL IMPERV. – 35,990 SF

DRAINAGE BASIN 4.4
TOTAL AREA – 73,111 SF
TOTAL IMPERV. – 42,649 SF

Revisions:		
Date:	By:	
3/27/23	BIL	REVISED PER CITY OF DELAND COMMENTS.

Designed: MWR	Scale: 1" = 60'		
Drawn: BIL	Project: 2022-04		
Checked: MWR	Date: 10-14-2022		
File: Meadowlea Village Ph. 4-7.dwg			

MICHAEL W. RADCLIFFE ENGINEERING, INC.
2611 S.E. Lake Weir Avenue Ocala, FL 34471 (352) 629-5500 FAX (352) 629-8010
Certificate No. EB-0006198 • Michael W. Radcliffe P.E. #31170 • Christopher A. Gwin P.E. #69358
www.radcliffeengineering.com

COPYRIGHT © 2023 Michael W. Radcliffe Engineering, Inc. All Rights Reserved

Project Name: Meadowlea Village Ph. 4&5
Sheet Name: Drainage Plan

Sheet No.
C003
of
C018

X:\MWRE Projects\Meadowlea MHP\2022-04 Meadowlea Village Ph. 4-7\Design\CADD\Meadowlea Village Ph. 4-7.dwg 3/28/2023 2:32 PM

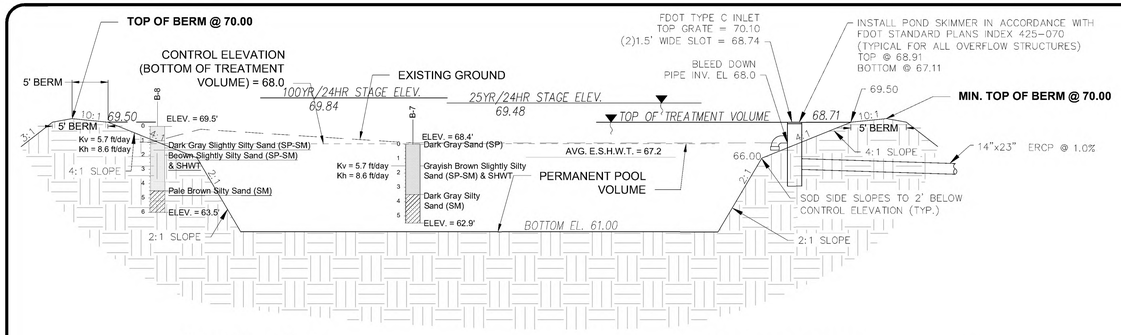

NOTE: SEE GEOTECHNICAL REPORT BY CENTRAL TESTING LABORATORY, INC. DATED JANUARY 27, 2022 INCLUDED IN STORMWATER REPORT FOR MORE DETAILED BORING INFORMATION

Section A-A
D.D.A. 1.0
Not To Scale

NOTE: SOD ALL SIDE SLOPES, BERMS AND DRA BOTTOM.

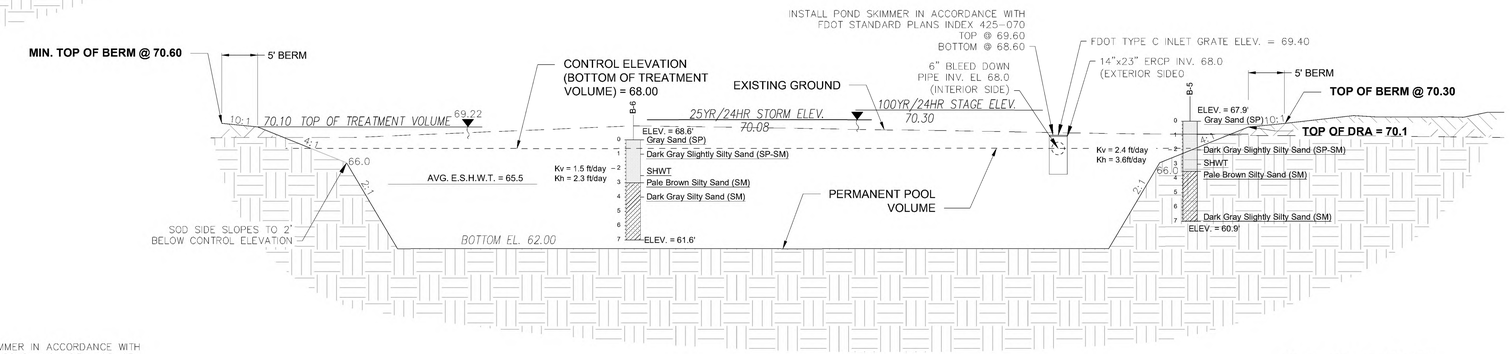

Section B-B
D.D.A. 2.0
Not To Scale

NOTE: SOD ALL SIDE SLOPES, BERMS AND DRA BOTTOM.

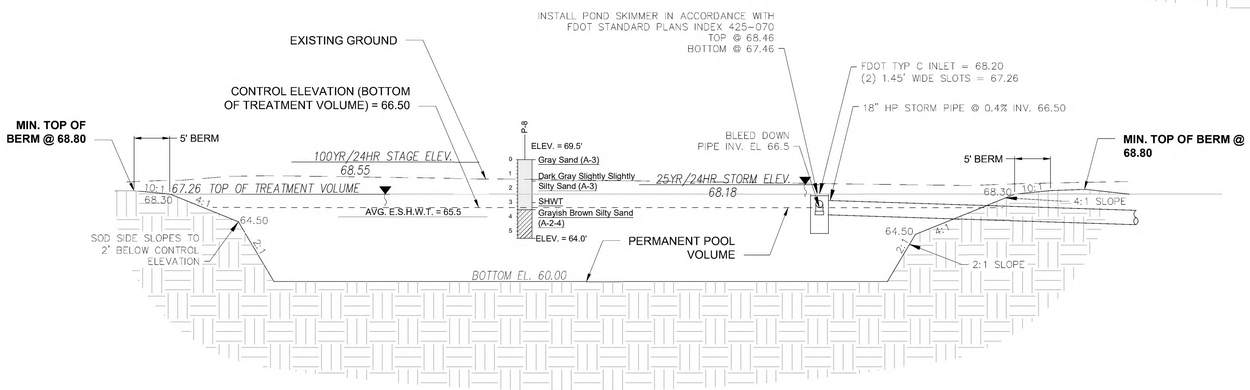

Section C-C
D.D.A. 3.0
Not To Scale

NOTE: SOD ALL SIDE SLOPES, BERMS AND DRA BOTTOM.

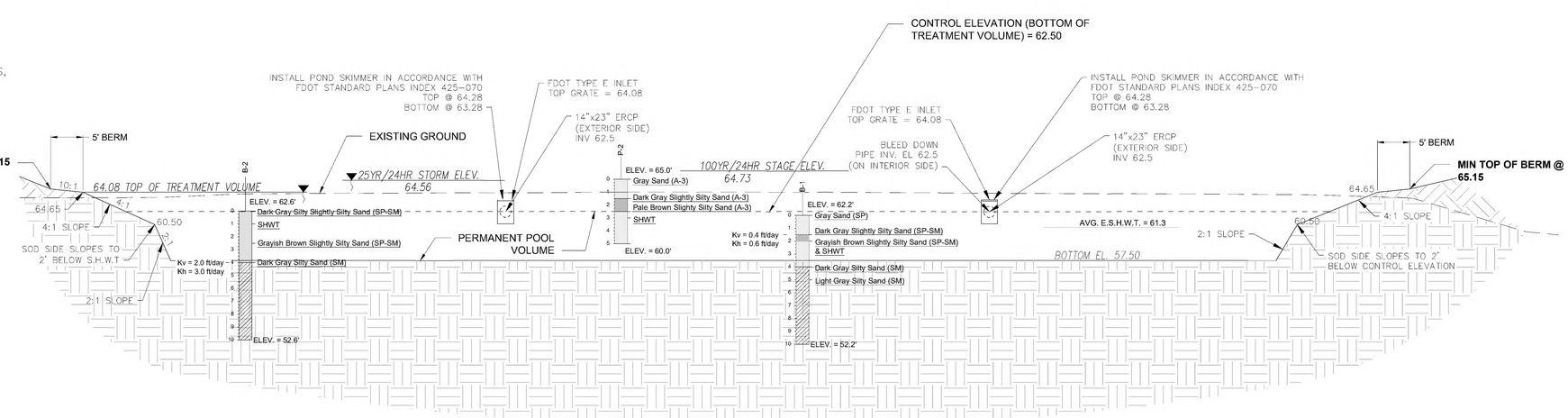

Section D-D
D.D.A. 4.0
Not To Scale

NOTE: SOD ALL SIDE SLOPES, THIS WILL BE PERMANENTLY WET

Date:	By:	Revisions:
3/27/23	BIL	REVISED PER OT OF DELAND COMMENTS

Designed: MWR
Drawn: BIL
Checked: MWR
Scale: 1" = 100'
Project: 2022-04
Date: 10-14-2022
File: Meadowlea Village Ph. 4-7.dwg

MICHAEL W. RADCLIFFE ENGINEERING, INC.
3211 S.E. Lake Weir Avenue Ocala, FL 34471 (352) 629-5500 FAX (352) 629-1010
Certificate No. EB-0006198 • Michael W. Radcliffe P.E. #31170 • Christopher A. Gwin P.E. #66568
www.radcliffeengineering.com

COPYRIGHT © 2023 Michael W. Radcliffe Engineering, Inc. All Rights Reserved.

Project Name: Meadowlea Village Ph. 4&5
Sheet Name: DDA Sections

Sheet No.
C004
of
C021

X:\MWE Projects\Meadowlea MHP\2022-04 Meadowlea Village Ph. 4-7\Design\CADD\Meadowlea Village Ph. 4-7.dwg 3/28/2023 2:45 PM

Meadowlea Village
A COVE COMMUNITY

MEADOWLEA MHP - PH. 4-7 SITE PLAN
CITY OF DELAND, FLORIDA

GRAPHIC SCALE
(IN FEET)
1 inch = 50 ft.

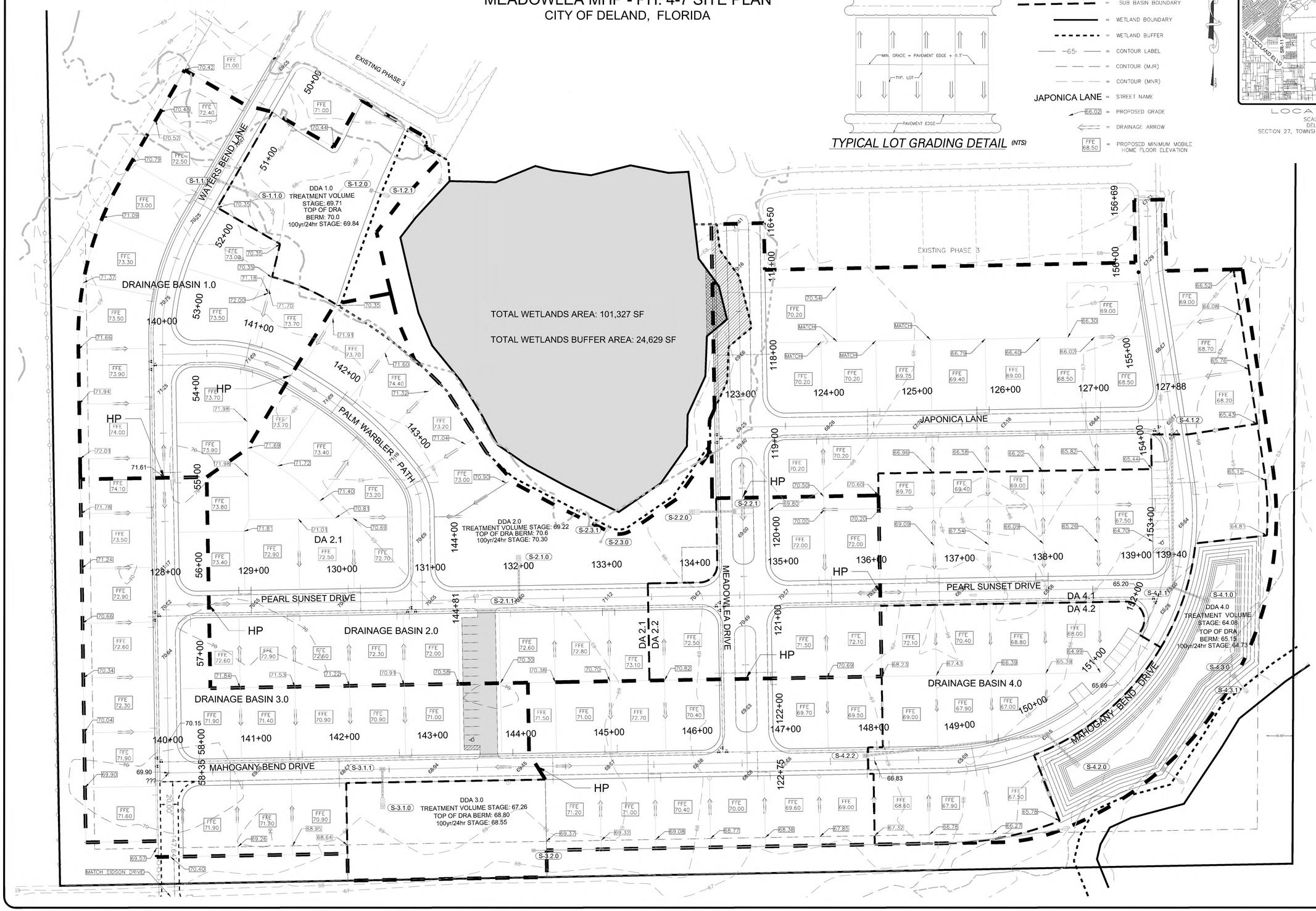

Legend:

- DRAINAGE BASIN BOUNDARY
- SUB BASIN BOUNDARY
- WETLAND BOUNDARY
- WETLAND BUFFER
- 65 — CONTOUR LABEL
- CONTOUR (MJR)
- CONTOUR (MNR)
- JAPONICA LANE — STREET NAME
- 66.02 — PROPOSED GRADE
- DRAINAGE ARROW
- FFE 68.50 — PROPOSED MINIMUM MOBILE HOME FLOOR ELEVATION

TYPICAL LOT GRADING DETAIL (NTS)

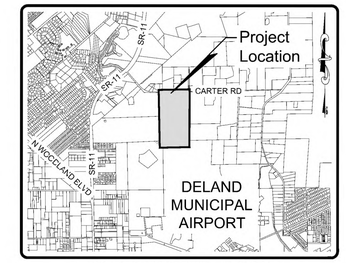

LOCATION MAP
SCALE: 1" = 4000'
DELAND, FLORIDA
SECTION 27, TOWNSHIP 16 SOUTH, RANGE 30 EAST

Date:	By:	Revisions:
3/27/23	BIL	REVISED PER CIT OF DELAND COMMENTS.

Designed: MWR
Drawn: BIL
Checked: MWR
Scale: 1" = 50'
Project: 2022-04
Date: 10-14-2022
File: Meadowlea Village Ph. 4-7.dwg

MICHAEL W. RADCLIFFE ENGINEERING, INC.
2611 S.E. Lake Weir Avenue Ocala, FL 34471 (352) 629-5500 FAX (352) 629-1010
Certificate No. EB-0005198 • Michael W. Radcliffe P.E. #31170 • Christopher A. Gwin P.E. #69568
www.radcliffeengineering.com

Copyright © 2023 Michael W. Radcliffe Engineering, Inc. All Rights Reserved.

Project Name: Meadowlea Village Ph. 4&5
Sheet Name: Grading Plan

Sheet No.
C005
of
C021

X:\MWRE Projects\Meadowlea MHP\2022-04 Meadowlea Village Ph. 4-7\Design\CADD\Meadowlea Village Ph. 4-7.dwg 5/28/2023 2:54 PM

Meadowlea Village
A COVE COMMUNITY

GRAPHIC SCALE
50 0 25 50 100 200
(IN FEET)
1 inch = 50 ft.

Legend:

- TREE PROTECTION AREA
- WETLAND BOUNDARY
- WETLAND BUFFER
- JAPONICA LANE — PROPOSED STREET NAME
- PROPOSED FIRE HYDRANT
- PHASE LINE
- FEMA ZONES

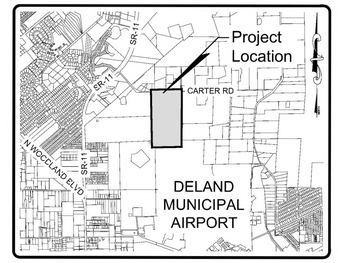

LOCATION MAP
SCALE: 1" = 4000'
DELAND, FLORIDA
SECTION 27, TOWNSHIP 16 SOUTH, RANGE 30 EAST

Revisions:			
Date:	By:		
3/27/23	BIL	REVISED PER CIT OF DELAND COMMENTS	

Designed: MWR
Drawn: BIL
Checked: MWR
Scale: 1" = 50'
Project: 2022-04
Date: 10-14-2022
File: Meadowlea Village Ph. 4-7.dwg

MICHAEL W. RADCLIFFE ENGINEERING, INC.
2811 S.E. Lake Weir Avenue Ocala, FL 34471 (352) 629-5500 FAX (352) 629-1010
Certificate No. EB-0006198 • Michael W. Radcliffe P.E. #31170 • Christopher A. Gwin P.E. #60568
www.radcliffeengineering.com

Copyright © 2023 Michael W. Radcliffe Engineering, Inc. All Rights Reserved

Project Name: Meadowlea Village Ph. 4&5
Sheet Name: Proposed Phase IV & V

Sheet No.
C006
of
C021

X:\MWRE Projects\Meadowlea MHP\2022-04 Meadowlea Village Ph. 4-7\Design\CADD\Meadowlea Village Ph. 4-7.dwg 3/28/2023 1:06 PM

Meadowlea Village
A COVE COMMUNITY

GRAPHIC SCALE
60 0 30 60 120 240
(IN FEET)
1 inch = 60 ft.

Legend:

-65-	CONTOUR LABEL
	FEMA ZONES
	WETLAND BOUNDARY
	WETLAND BUFFER
	CONTOUR (MJR)
	CONTOUR (MNR)
JAPONICA LANE	PROPOSED STREET NAME
	PROPOSED FIRE HYDRANT
	PROPOSED MANHOLE
	PROPOSED DOUBLE SEWER SERVICES
	PROPOSED DOUBLE WATER SERVICES

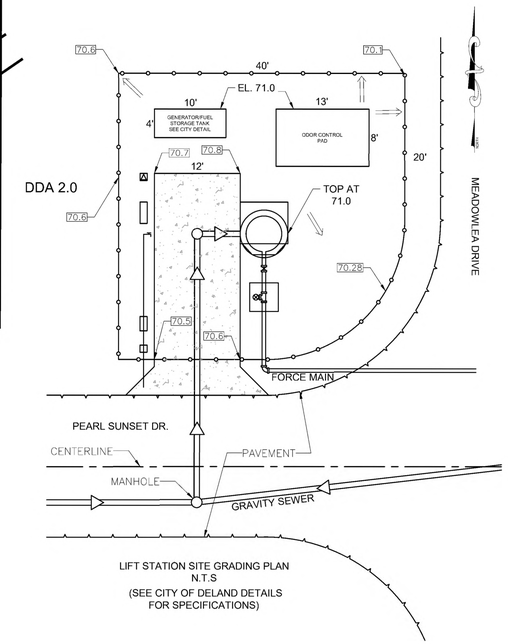

LIFT STATION SITE GRADING PLAN
N.T.S
(SEE CITY OF DELAND DETAILS FOR SPECIFICATIONS)

Date:	By:	Revisions:
3/27/23	BIL	REVISED PER CIT OF DELAND COMMENTS.

Designed: MWR
Drawn: BIL
Checked: MWR
Scale: 1" = 60'
Project: 2022-04
Date: 10-14-2022
File: Meadowlea Village Ph. 4-7.dwg

MICHAEL W. RADCLIFFE ENGINEERING, INC.
3911 S.E. Lake Weir Avenue Ocala, FL 34471 (352) 629-5500 FAX (352) 629-1010
Certificate No. EB-0006198 • Michael W. Radcliffe P.E. #31170 • Christopher A. Gwin P.E. #69568

COPYRIGHT © 2023 Michael W. Radcliffe Engineering, Inc. All Rights Reserved

Project Name: Meadowlea Village Ph. 4&5
Sheet Name: Utility Plan

Sheet No.
C007
of
C021

X:\MWRE Projects\Meadowlea MVP\2022-04 Meadowlea Village Ph. 4-7\Design\CAD\Meadowlea Village Ph. 4-7.dwg 3/28/2023 1:06 PM

Meadowlea Village
A COVE COMMUNITY

GRAPHIC SCALE
60 0 30 60 120 240
(IN FEET)
1 inch = 60 ft.

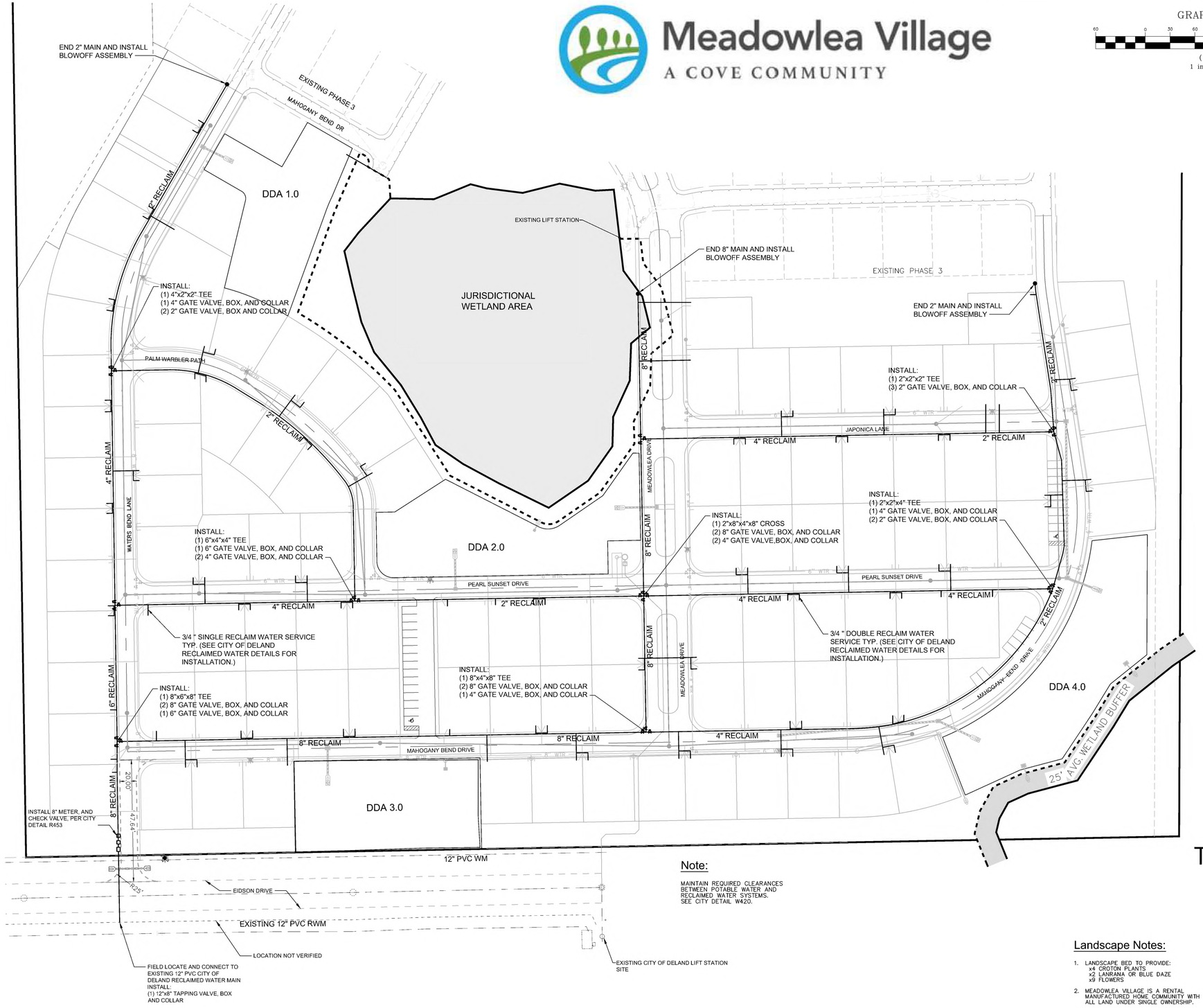

Legend:

- WETLAND BOUNDARY
- WETLAND BUFFER
- JAPONICA LANE — PROPOSED STREET NAME
- PROPOSED FIRE HYDRANT
- PROPOSED MANHOLE
- PROPOSED DOUBLE SEWER SERVICES
- PROPOSED DOUBLE WATER SERVICES
- PROPOSED DOUBLE RECLAIM SERVICES
- WV — PROPOSED WATER VALVE

Note:

MAINTAIN REQUIRED CLEARANCES BETWEEN POTABLE WATER AND RECLAIMED WATER SYSTEMS. SEE CITY DETAIL W420.

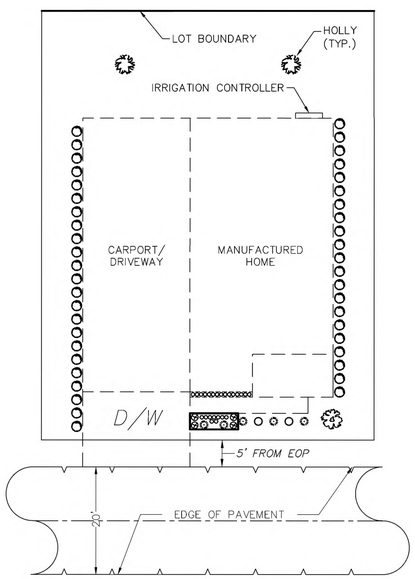

TYPICAL LOT LANDSCAPING

Not To Scale

MINIMUM TREE PLANTING SIZE PER CITY OF DELAND MUNICODE SEC.33-57.05(b)2

Landscape Notes:

1. LANDSCAPE BED TO PROVIDE:
   x4 CROTON PLANTS
   x2 LANRANA OR BLUE DAZE
   x9 FLOWERS
2. MEADOWLEA VILLAGE IS A RENTAL MANUFACTURED HOME COMMUNITY WITH ALL LAND UNDER SINGLE OWNERSHIP.
3. WATER/SEWER FOR EXISTING PHASES 1-3 IS PROVIDED BY MEADOWLEA VILLAGE

PLANT / TREE LEGEND	
LIVE OAK (x1)	
AMERICAN HOLLY (x2)	
FLOWERS (x24)	
LANTANA OR BLUE DAZE (x6)	
PODOCARPUS (x44)	
TY PLANT (x4)	
CROTON PLANT (x4)	

Date:	By:	Revisions:
2/20/23	BIL	REVISED PER CIT OF DELAND COMMENTS.

Designed: MWR
Drawn: BIL
Checked: MWR
Scale: 1" = 60'
Project: 2022-04
Date: 10-14-2022
File: Meadowlea Village Ph. 4-7.dwg

MICHAEL W. RADCLIFFE ENGINEERING, INC.
2611 S.E. Lake Weir Avenue Ocala, FL 34471 (352) 629-5500 FAX: (352) 629-1010
Certificate No. EB-0006198 • Michael W. Radcliffe P.E. #31170 • Christopher A. Gwin P.E. #66568

COPYRIGHT © 2023 Michael W. Radcliffe Engineering, Inc. all Rights Reserved

Project Name: Meadowlea Village Ph. 4&5
Sheet Name: Landscape/Irrigation Plan

Sheet No.
C007
of
C020

X:\MWRE Projects\Meadowlea MHP\2022-04 Meadowlea Village Ph. 4-7\Design\CADD\Meadowlea Village Ph. 4-7.dwg 2/20/2023 11:14 PM

Meadowlea Village
A COVE COMMUNITY

GRAPHIC SCALE
60 0 30 60 120 240
(IN FEET)
1 inch = 60 ft.

Note:

MAINTAIN REQUIRED CLEARANCES BETWEEN POTABLE WATER AND RECLAIMED WATER SYSTEMS. SEE CITY DETAIL W420.

Legend:

- WETLAND BOUNDARY
- WETLAND BUFFER
- JAPONICA LANE — PROPOSED STREET NAME
- PROPOSED FIRE HYDRANT
- PROPOSED MANHOLE
- PROPOSED DOUBLE SEWER SERVICES
- PROPOSED DOUBLE WATER SERVICES
- PROPOSED DOUBLE RECLAIM SERVICES
- WV — PROPOSED WATER VALVE

Landscape Notes:

1. LANDSCAPE BED TO PROVIDE:
   x4 CROTON PLANTS
   x2 LANRANA OR BLUE DAZE
   x9 FLOWERS
2. MEADOWLEA VILLAGE IS A RENTAL MANUFACTURED HOME COMMUNITY WITH ALL LAND UNDER SINGLE OWNERSHIP.
3. TWO TREES TO BE PLANTED PER LOT: (102 LOTS X 2 TREES = 104 TREES)
4. WATER/SEWER FOR EXISTING PHASES 1-3 IS PROVIDED BY MEADOWLEA VILLAGE.
5. TREES TO BE PLANTED AT MINIMUM SIZE:
   3" CALIPER, 8" HEIGHT, 4' SPREAD, 45 GALLON.

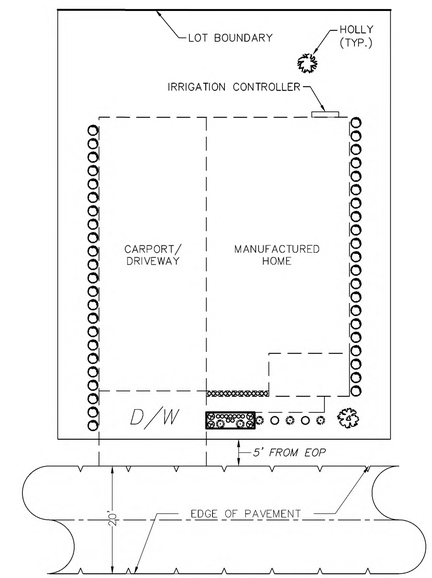

TYPICAL LOT LANDSCAPING

Not To Scale

MINIMUM TREE PLANTING SIZE PER CITY OF DELAND MUNICODE SEC.33-57.05(b)2

PLANT / TREE LEGEND	
LIVE OAK (x1)	
AMERICAN HOLLY (x2)	
FLOWERS (x24)	
LANTANA OR BLUE DAZE (x6)	
PODOCARPUS (x44)	
TY PLANT (x4)	
CROTON PLANT (x4)	

Revisions:			
Date:	By:		
3/27/23	BIL	REVISED PER OT OF DELAND COMMENTS.	

Designed: MWR
Drawn: BIL
Checked: MWR
Scale: 1" = 60'
Project: 2022-04
Date: 10-14-2022
File: Meadowlea Village Ph. 4-7.dwg

MICHAEL W. RADCLIFFE ENGINEERING, INC.
2631 S.E. Lake Weir Avenue Ocala, FL 34471 (352) 629-5500 FAX (352) 629-1010
Certificate No. EB-0006198 • Michael W. Radcliffe P.E. #31170 • Christopher A. Gwin P.E. #66558

Copyright © 2023 Michael W. Radcliffe Engineering, Inc. All Rights Reserved.

Project Name: Meadowlea Village Ph. 4&5
Sheet Name: Landscape/Irrigation Plan

Sheet No.
C007
of
C021

X:\MWRE Projects\Meadowlea MHP\2022-04 Meadowlea Village Ph. 4-7\Design\CAD\Meadowlea Village Ph. 4-7.dwg 3/28/2023 3:02 PM

Meadowlea Village
A COVE COMMUNITY

GRAPHIC SCALE
(IN FEET)
1 inch = 100 ft.

NOTES:

SEE SHEET M001 FOR TREE PROTECTION AREA CALC.

SEE SHEET C008 FOR TREE CHART

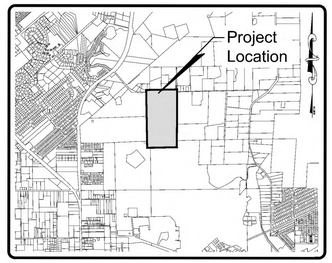

LOCATION MAP
SCALE: 1" = 4000'
DELAND, FLORIDA
SECTION 27, TOWNSHIP 16 SOUTH, RANGE 30 EAST

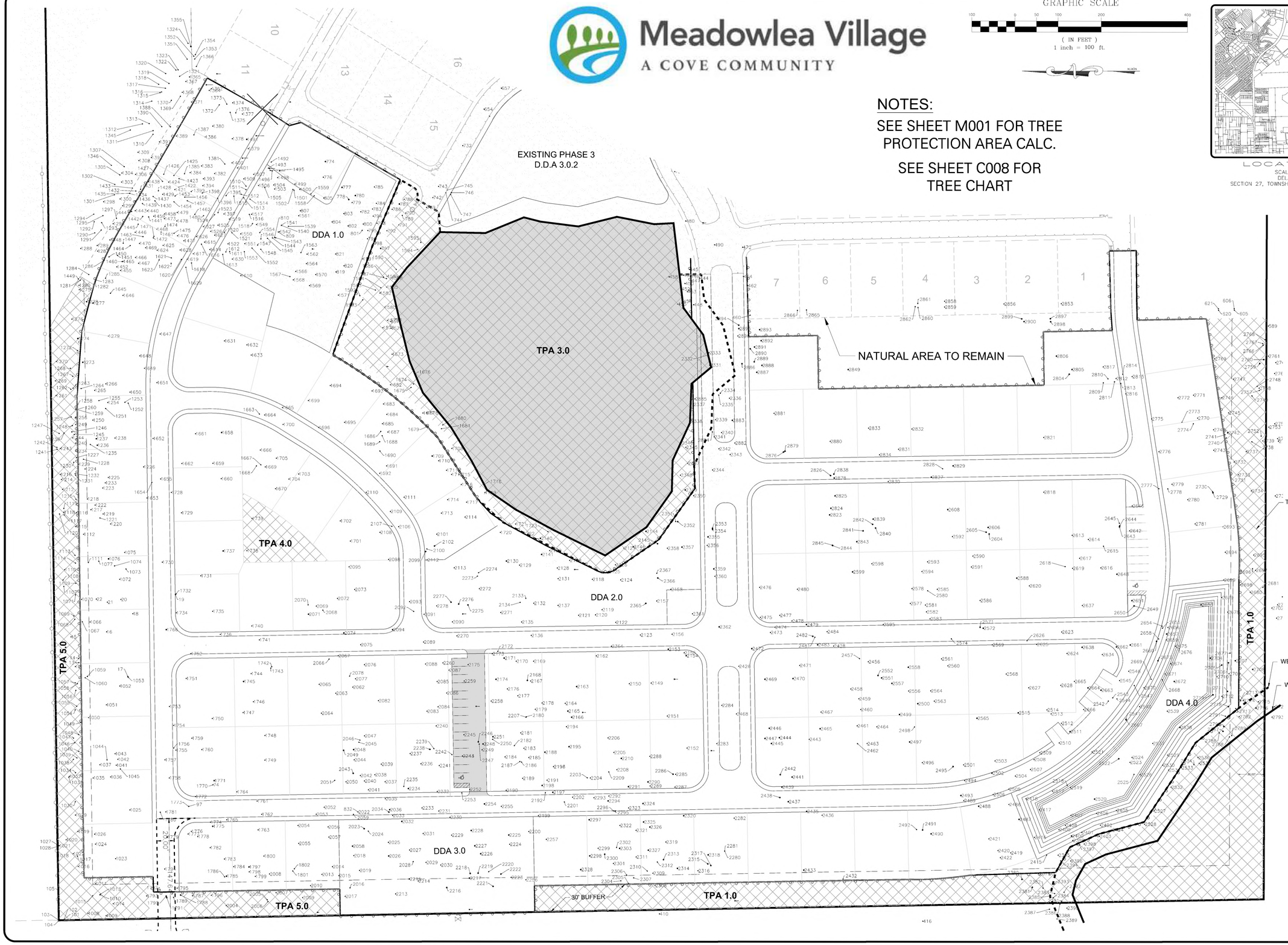

Date:	By:	Revisions:
3/27/23	BIL	REVISED PER CITY OF DELAND COMMENTS

Designed: MWR
Drawn: BIL
Checked: MWR
Scale: 1" = 50'
Project: 2022-04
Date: 10-14-2022
File: Meadowlea Village Ph. 4-7.dwg

MICHAEL W. RADCLIFFE ENGINEERING, INC.
2611 S.E. Lake Weir Avenue Ocala, FL 34471 (352) 629-5500 FAX (352) 629-1010
Certificate No. EB-0000199 Michael W. Radcliffe, P.E. #17189 Christopher A. Gwin, P.E. #66088
www.radcliffeengineering.com

COPYRIGHT © 2023 Michael W. Radcliffe Engineering, Inc. All Rights Reserved.

Project Name: Meadowlea Village Ph. 4&5
Sheet Name: Tree Plan

Sheet No.
C008
of
C021

X:\MWRE Projects\Meadowlea MHP\2022-04 Meadowlea Village Ph. 4-7\Dwgs\CADD\Meadowlea Village Ph. 4-7.dwg 3/28/2023 5:16 PM

Point #	Row Description
1	22 INCH PINE
2	CHINESE TALLOW
12	16 INCH PINE
13	9 INCH PINE
14	18IN SLASH PINE
15	14 INCH PINE
16	17 INCH PINE
17	14 INCH PINE
18	9 INCH PINE
19	10 INCH PINE
20	6 INCH PINE
21	16 INCH PINE
22	16 INCH PINE
74	14 IN PINE
97	6 IN PINE
774	TREE OAK 8IN
776	TREE PINE 6IN
777	TREE OAK 6IN
778	TREE OAK 6IN
779	TREE PINE 10IN
780	TREE OAK 8IN
782	TREE PINE 6IN
783	TREE PINE 6IN
784	TREE PINE 8IN
785	TREE PINE 10IN
786	TREE PINE 8IN
787	TREE OAK 6IN
788	TREE PINE 10IN
789	TREE PINE 10IN
790	TREE PINE 10IN
791	TREE PINE 10IN
792	TREE PINE 6IN
793	TREE PINE 8IN
794	TREE PINE 8IN
795	TREE PINE 8IN
796	TREE PINE 8IN
797	12IN CHINESE TALLOW
798	TREE PINE 6IN
800	TREE PINE 6IN
801	TREE PINE 8IN
802	TREE PINE 6IN
803	TREE PINE 6IN
804	TREE PINE 6IN
805	TREE PINE 12IN
807	TREE PINE 10IN
809	TREE PINE 10IN
810	12IN SLASH PINE
819	TREE PINE 10IN
820	TREE PINE 10IN
821	TREE PINE 10IN
832	7 INCH PINE
1008	18IN SLASH PINE
1009	13 INCH PINE
1010	17 INCH PINE
1011	15 INCH PINE
1012	8 INCH PINE
1013	14 INCH PINE
1014	9 INCH PINE
1015	13 INCH PINE
1016	16 INCH PINE
1017	14 INCH PINE
1018	7 INCH PINE
1019	15 INCH PINE
1020	12 INCH PINE
1021	13 INCH PINE
1022	15 INCH PINE
1023	15 INCH PINE
1024	34IN SLASH PINE
1025	15 INCH PINE
1026	10 INCH PINE
1027	14 INCH PINE
1028	17 INCH PINE
1029	NO TREE
1030	10 INCH PINE
1032	10 INCH PINE
1033	10 INCH PINE
1034	16 INCH PINE
1035	17 INCH PINE
1036	14 INCH PINE
1037	14 INCH PINE
1038	12 INCH PINE
1039	8 INCH PINE
1040	18IN SLASH PINE
1041	14 INCH PINE
1042	14 INCH PINE

Point #	Row Description
1043	15 INCH PINE
1044	8 INCH PINE
1045	10 INCH PINE
1046	15 INCH PINE
1047	12 INCH PINE
1048	14 INCH PINE
*1049	19 LONGLEAF PINE
1050	14 INCH PINE
1051	15 INCH PINE
1052	17 INCH PINE
1053	16 INCH PINE
1054	16 INCH PINE
1055	14 INCH PINE
1056	14 INCH PINE
1057	9 INCH PINE
1058	14 INCH PINE
1059	13 INCH PINE
1060	6 INCH PINE
1066	13 INCH PINE
1067	13 INCH PINE
1068	11 INCH PINE
1069	18 INCH SLASH PINE
1070	13 INCH PINE
1071	15 INCH PINE
1072	9 INCH PINE
1073	16 INCH PINE
1074	15 INCH PINE
1075	14 INCH PINE
1076	9 INCH OAK
1077	16 INCH PINE
1107	16 INCH PINE
1108	13 INCH PINE
1109	16 INCH PINE
1110	14 INCH PINE
1111	14 INCH PINE
1112	14 INCH PINE
1113	14 INCH PINE DEAD
1114	14 INCH PINE DEAD
1115	20 INCH SLASH PINE
1116	9 INCH PINE
1117	10 7 INCH TWIN PINE
1118	6 INCH UNKNOWN
1119	17 6 INCH TWIN PINE
1120	14 INCH PINE
1212	13 INCH PINE
1214	8 INCH PINE
1215	14 INCH PINE
1216	7 INCH PINE
1217	15 INCH PINE
1218	14 INCH PINE
1219	13 INCH PINE
1220	13 INCH PINE
1221	10 INCH PINE
1222	15 INCH PINE
1223	17 INCH PINE
1224	9 INCH PINE
1225	15 INCH PINE
1226	21 INCH SLASH PINE
1227	10 INCH PINE
1228	13 INCH PINE
1229	9 INCH PINE
1230	6 16 INCH PINE TWIN
1231	7 15 INCH PINE TWIN
1232	7 NCH PINE
1233	9 NCH PINE
1234	11 INCH PINE
1235	17 INCH PINE
1236	6 INCH BAY
1237	6 INCH BAY
1238	16 INCH PINE
1239	16 INCH PINE
1240	10 4 4 INCH PINE TRIPLE
1241	8 INCH PINE
1242	11 INCH PINE
1243	18 INCH SLASH PINE
1244	14 INCH PINE
1245	9 INCH PINE
1246	7 INCH PINE
1247	12 INCH PINE
1248	10 INCH PINE
1249	11 INCH PINE
1250	17 INCH PINE
1251	16 INCH PINE
1252	18 INCH SLASH PINE
1253	16 INCH PINE

Point #	Row Description
1254	9 INCH PINE
1255	15 INCH PINE
1256	8 INCH PINE
1257	12 INCH PINE
1258	7 INCH PINE
1259	6 INCH PINE
1260	6 INCH PINE
1261	14 INCH PINE
1262	8 INCH PINE
1263	15 INCH PINE
1264	10 INCH PINE
1265	17 INCH PINE
1266	13 INCH PINE
1267	8 INCH PINE
1268	9 INCH PINE
1269	19 INCH SLASH PINE
1270	16 INCH PINE
1272	17 INCH LONGLEAF PINE
1273	6 INCH HOLLY
1274	10 INCH HOLLY
1275	9 INCH PINE
1276	13 INCH PINE
1277	8 INCH HOLLY
1278	8 INCH HOLLY
*1279	20 INCH LONGLEAF PINE
1280	8 INCH PINE
1281	15 16 INCH PINE TWIN
1282	15 INCH PINE
1283	7 INCH PINE
1284	6 INCH PINE
1285	17 INCH PINE
1286	10 INCH PINE
1287	8 INCH PINE
1288	9 8 4 INCH PINE TRIPLE
1289	14 8 INCH PINE TWIN
1290	9 INCH PINE
1291	8 INCH PINE
1292	12 INCH PINE
1293	14 INCH PINE
1294	9 INCH PINE
1295	9 INCH PINE
1296	6 INCH PINE
1297	8 INCH PINE
1298	7 INCH PINE
1299	10 INCH PINE
1300	9 INCH PINE
1301	11 INCH PINE
1302	8 INCH PINE
1303	10 INCH PINE
1304	7 INCH PINE
1305	6 INCH PINE
1306	8 INCH PINE
1307	12 INCH PINE
1308	10 INCH PINE
1309	16 INCH PINE
1310	15 INCH PINE
1311	11 INCH PINE
1312	14 INCH PINE
1313	10 INCH PINE
1314	12 INCH PINE
1315	8 INCH PINE
1316	6 INCH PINE
1317	12 INCH PINE
1318	8 INCH PINE
1319	12 INCH PINE
1320	15 INCH PINE
1321	12 INCH PINE
1322	9 NCH PINE
1323	9 NCH PINE
1324	9 INCH PINE
1345	12 INCH PINE
1346	10 INCH PINE
1351	9 INCH PINE
1352	8 INCH PINE
1353	10 INCH PINE
1354	15 INCH PINE
1355	9 INCH OAK
1362	17 INCH PINE
1363	7 INCH CHINA BERRY
1364	11 INCH PINE
1365	7 INCH PINE
1366	12 INCH PINE
1367	12 INCH PINE
1368	7 INCH PINE
1369	10 INCH PINE

Point #	Row Description
1370	14 INCH PINE
1371	15 INCH PINE
1372	9 INCH PINE
1373	14 INCH PINE
1374	9 INCH PINE
1375	12 INCH PINE
1376	11 INCH PINE
1377	17 INCH PINE
1378	10 NCH PINE
1379	9 NCH PINE
1380	12 NCH PINE
1381	17 NCH PINE
1382	11 NCH PINE
1383	12 NCH PINE
1384	8 NCH PINE
1385	12 INCH PINE
1386	8 INCH PINE
1387	14 INCH PINE
1388	9 INCH PINE
1389	14 INCH PINE
1390	12 INCH PINE
1391	12 INCH PINE
1392	14 INCH PINE
1393	10 INCH PINE
1394	12 INCH PINE
1395	10 INCH PINE
1396	14 INCH PINE
1397	10 INCH PINE
1398	11 INCH PINE
1399	13 INCH PINE
1400	9 INCH PINE
1401	12 INCH PINE
1421	8 INCH PINE
1422	13 INCH PINE
1423	8 INCH PINE
1424	10 INCH PINE
1425	9 INCH PINE
1426	13 INCH PINE
1427	8 INCH PINE
1428	12 INCH PINE
1429	8 INCH PINE
1430	10 INCH PINE
1431	12 INCH PINE
1432	7 INCH PINE
1433	11 INCH PINE
1434	10 INCH PINE
1435	6 INCH PINE
1436	6 INCH PINE
1437	6 INCH PINE
1438	6 INCH PINE
1439	9 INCH PINE
1440	12 INCH PINE
1441	9 INCH PINE
1442	6 INCH PINE
1443	9 INCH PINE
1444	9 INCH PINE
1445	10 INCH PINE
1446	10 INCH PINE
1447	12 INCH PINE
1448	7 INCH PINE
1449	7 INCH PINE
1450	12 INCH PINE
1451	6 INCH PINE
1452	12 INCH PINE
1453	9 INCH PINE
1454	9 INCH PINE
1455	11 INCH PINE
1456	10 INCH PINE
1457	10 INCH PINE
1458	10 INCH PINE
1459	9 INCH PINE
1460	12 INCH PINE
1461	9 INCH PINE
1462	12 INCH PINE
1463	11 INCH PINE
1464	8 INCH PINE
1465	6 INCH PINE
1466	10 INCH PINE
1467	12 INCH PINE
1468	12 INCH PINE
1469	12 INCH PINE
1470	6 INCH PINE
1471	10 INCH PINE
1472	6 INCH PINE
1473	8 INCH PINE

Point #	Row Description
1474	9 INCH PINE
1475	10 INCH PINE
1476	10 INCH PINE
1477	9 INCH PINE
1478	12 INCH PINE
1479	10 INCH PINE
1480	10 INCH PINE
1491	7 INCH HOLLY
1492	6 INCH PINE
1493	22 INCH PINE
1494	6 INCH CAMPHOR
1495	7 INCH PINE
1496	7 INCH PINE
1497	8 INCH CAMPHOR
1498	13 INCH PINE
1499	13 INCH PINE
1500	11 INCH PINE
1501	12 INCH PINE
1502	9 INCH PINE
1503	11 INCH PINE
1504	12 INCH PINE
1505	12 INCH PINE
1506	7 INCH PINE
1507	14 INCH PINE
1508	10 INCH CAMPHOR
1509	12 INCH PINE
1510	9 INCH PINE
1511	12 INCH PINE
1512	10 INCH PINE
1513	7 INCH PINE
1514	12 INCH PINE
1515	12 INCH PINE
1516	10 INCH PINE
1517	10 INCH PINE
1518	9 INCH PINE
1519	11 INCH PINE
1520	10 INCH PINE
1521	11 INCH PINE
1522	11 INCH PINE
1523	9 INCH PINE
1524	9 INCH PINE
1525	11 INCH PINE
1526	6 INCH PINE
1527	11 INCH PINE
1539	7 INCH PINE
1540	15 INCH PINE
1541	15 INCH PINE
1542	16 INCH SLASH PINE
1543	18 INCH PINE
1544	6 INCH PINE
1545	12 INCH PINE
1546	10 INCH PINE
1547	10 INCH PINE
1548	6 INCH PINE
1549	10 INCH PINE
1550	10 INCH PINE
1551	14 INCH PINE
1553	14 INCH PINE
1554	6 INCH PINE
1558	18 INCH SLASH PINE
1559	8 INCH PINE
1561	7 INCH PINE
1562	7 INCH PINE
1563	6 INCH PINE
1564	7 INCH PINE
1566	7 INCH PINE
1567	6 INCH PINE
1568	8 INCH PINE
1569	7 INCH PINE
1570	7 INCH PINE
1571	7 INCH UNKNOWN
1576	7 INCH PINE
1577	13 INCH PINE
1578	7 INCH UNKNOWN
*1579	14 LOBLOLLY BAY
1580	6 INCH UNKNOWN
1581	6 INCH UNKOWN
1582	7 INCH PINE
1583	8 INCH PINE
1584	7 INCH PINE
1585	8 INCH UNKNOWN
1586	6 INCH PINE
1587	7 INCH PINE
1588	8 INCH PINE
1589	6 INCH UNKNOWN

Point #	Row Description
1590	9 INCH PINE
1592	7 INCH PINE
1593	9 INCH PINE
1594	14 INCH PINE
1595	14 INCH PINE
1610	8 INCH PINE
1611	7 INCH PINE
1612	6 INCH PINE
1613	15 INCH PINE
1614	7 INCH PINE
1615	11 INCH PINE
1616	11 INCH PINE
1617	7 INCH PINE
1618	7 INCH PINE
1619	12 INCH PINE
1620	12 INCH PINE
1621	8 INCH PINE
1622	6 INCH PINE
1623	12 INCH PINE
1624	9 INCH PINE
1625	9 INCH PINE
1626	10 INCH PINE
1627	8 INCH PINE
1628	10 INCH PINE
1629	10 INCH PINE
1630	7 INCH PINE
1631	6 INCH PINE
1632	8 INCH PINE
1633	10 INCH PINE
1645	12 INCH PINE
1646	11 INCH PINE
1647	15 INCH PINE
1649	16 INCH SLASH PINE
1650	12 INCH PINE
1651	12 INCH PINE
1652	17 INCH PINE
1653	11 INCH PINE
1654	16 INCH PINE
1655	15 INCH PINE
*1658	MULTI 12 13 14 VIRGINIA LIVE OAK
1659	12 INCH PINE
1660	12 INCH PINE
1661	10 INCH PINE
1662	23 INCH SLASH PINE
1663	7 INCH PINE
1664	15 INCH PINE
*1665	22 INCH LONGLEAF PINE
1666	10 INCH PINE
1667	14 INCH PINE
1668	13 INCH PINE
1669	9 INCH PINE
1670	16 INCH PINE
1673	17 INCH PINE
1674	16 INCH PINE
1675	8 INCH PINE
1676	MULTI 10 10 8 PINE
1677	10 INCH PINE
1678	7 INCH UNKNOWN
1679	16 INCH PINE
1680	11 INCH PINE
1681	12 INCH PINE
1682	8 INCH UNKNOWN
1683	15 INCH PINE
1684	13 INCH PINE
1685	12 INCH PINE
1686	10 INCH PINE
1687	14 INCH PINE
1688	9 INCH PINE
1689	11 INCH PINE
1690	15 INCH PINE
1691	7 INCH UNKNOWN
*1692	20 LONGLEAF PINE
1693	MULTI 10 8 8 DAHOON HOLLY
1694	17 INCH LONGLEAF PINE
*1695	19 INCH LONGLEAF PINE
*1696	20 INCH LONGLEAF PINE
1699	12 INCH LAUREL OAK
1700	8 INCH PINE
1701	12 INCH PINE
1702	11 INCH PINE
1703	14 INCH PINE
1704	8 INCH PINE
1705	10 INCH PINE
1708	10 INCH PINE
1709	TWIN 8 8 MAGNOLIA

Point #	Row Description
1710	17 INCH PINE
1711	7 INCH PINE
1712	8 INCH PINE
1713	15 INCH PINE
1714	12 INCH PINE
1715	14 INCH PINE
1716	10 INCH PINE
1717	17 LONGLEAF PINE
1718	9 INCH PINE
1719	13 INCH PINE
*1720	20 LONGLEAF PINE
1721	10 DAHOON HOLLY
1722	17 INCH PINE
1723	17 INCH PINE
1728	19 INCH SLASH PINE
1729	22 INCH SLASH PINE
1730	20 INCH SLASH PINE
1731	13 INCH PINE
1732	14 INCH PINE
1734	17 INCH PINE
1735	17 INCH PINE
1736	13 INCH PINE
1737	6 INCH OAK
1738	15 INCH PINE
1739	13 INCH PINE
1740	12 INCH PINE
1741	9 INCH PINE
1742	6 INCH PINE
1743	10 INCH PINE
1744	15 INCH PINE
1745	7 INCH OAK
1746	13 INCH PINE
1747	11 INCH PINE
1748	8 INCH PINE
1749	11 INCH PINE
1750	20 INCH POND PINE
1751	14 INCH PINE
1752	10 INCH PINE
1753	10 INCH PINE
1754	8 INCH PINE
1755	8 INCH PINE
1756	14 INCH PINE
1757	11 INCH PINE
1758	8 INCH PINE
1759	9 INCH PINE
1760	8 INCH PINE
1761	14 INCH PINE
1762	14 INCH PINE
1763	TWIN 12 12 PINE
1764	8 INCH PINE
1765	11 INCH PINE
1766	12 INCH LAUREL OAK
1770	14 IN PINE
1772	16 IN PINE
1773	6 IN PINE
1774	14 IN PINE
1775	7 IN OAK
1776	9 IN PINE
1777	10 IN PINE
1778	8 IN PINE
1780	8 IN PINE
1781	13 IN PINE
1782	13 IN PINE
1783	13 IN PINE
1784	10 IN PINE
1786	12 IN PINE
1787	9 IN PINE
1788	6 INCH HOLLY
1789	11 IN PINE
1790	7 INCH BAY
1791	6 INCH BAY
1792	11 IN PINE
1793	12 IN PINE
1794	14 IN PINE
1795	13 IN PINE
1796	13 IN PINE
1798	6 IN PINE
1799	17 IN PINE
1800	10 IN PINE
1801	8 IN PINE
1802	10 IN PINE
2004	20 INCH SLASH PINE
2005	9 INCH PINE
2006	12 INCH PINE
2007	10 INCH PINE

Point #	Row Description
2008	7 INCH PINE
2009	7 INCH PINE
2010	16 INCH SLASH PINE
2013	17 INCH PINE
2014	17 INCH PINE
2015	15 INCH PINE
2016	13 INCH PINE
2017	17 INCH LONGLEAF PINE
2018	15 INCH PINE
2019	6 INCH PINE
2022	7 INCH PINE
2023	6 INCH OAK
2024	9 INCH PINE
2025	10 INCH PINE
2026	6 INCH OAK
2027	14 INCH PINE
2028	17 INCH PINE
2029	13 INCH PINE
2030	14 INCH PINE
2031	14 INCH PINE
2033	12 INCH PINE
2034	7 INCH OAK
2035	14 INCH PINE
2036	6 INCH LAUREL OAK
2037	12 INCH PINE
2038	10 INCH PINE
2039	7 INCH PINE
2040	10 INCH PINE
2041	12 INCH PINE
2042	13 INCH PINE
2044	11 INCH PINE
2045	11 INCH PINE
2046	7 INCH PINE
2047	9 INCH PINE
2048	7 INCH OAK
2050	11 INCH PINE
2051	10 INCH PINE
2052	15 INCH PINE
2053	9 INCH PINE
2054	10 INCH PINE
*2055	20 INCH LONGLEAF PINE
2056	10 INCH PINE
2057	9 INCH PINE
2058	6 INCH HOLLY
2059	9 INCH PINE
2062	13 INCH PINE
2063	12 INCH PINE
2064	15 INCH PINE
2065	16 INCH PINE
2066	16 INCH PINE
2067	12 INCH PINE
2068	15 INCH PINE
2069	13 INCH PINE
2070	14 INCH PINE
2072	8 INCH PINE
2073	17 INCH PINE
2074	12 INCH OAK
*2075	23 LONGLEAF PINE
2076	16 INCH LONGLEAF PINE
2077	9 INCH PINE
2078	9 INCH PINE
2082	9 INCH PINE
2083	14 INCH PINE
2084	10 INCH PINE
2085	12 INCH PINE
2086	12 INCH PINE
2087	17 INCH PINE
2088	17 INCH PINE
2089	8 INCH PINE
2090	13 INCH PINE
2091	7 INCH PINE
2092	7 INCH PINE
2093	13 INCH PINE
2095	8 INCH PINE
2098	13 INCH PINE
2099	8 INCH OAK
2100	16 INCH PINE
2101	13 INCH PINE
2106	15 INCH PINE
2107	16 INCH PINE
2108	8 INCH PINE
2109	8 INCH PINE
2110	12 INCH PINE
2111	9 INCH PINE
2112	13 INCH PINE

Point #	Row Description
2113	15 INCH PINE
2114	9 INCH PINE
2118	14 INCH PINE
2119	6 INCH PINE
2120	6 INCH PINE
2121	6 INCH PINE
2122	10 INCH PINE
2123	10 INCH PINE
2124	13 INCH PINE
2125	16 INCH PINE
2126	17 INCH PINE
2127	14 INCH PINE
2128	14 INCH PINE
2129	13 INCH PINE
2130	8 INCH HOLLY
2131	17 INCH PINE
2132	13 INCH PINE
2133	13 INCH PINE
2134	12 INCH PINE
2135	13 INCH PINE
2136	16 INCH PINE
2137	15 INCH PINE
2138	6 INCH PINE
2139	6 INCH PINE
2141	6 INCH OAK
2145	8 INCH OAK
2149	14 INCH PINE
*2150	22 INCH LONGLEAF PINE
2151	17 INCH PINE
2152	14 INCH PINE
*2155	22 INCH LONGLEAF PINE
*2156	18 INCH LONGLEAF PINE
2157	16 INCH PINE
2158	20 INCH SLASH PINE
*2162	21 INCH LONGLEAF PINE
2163	7 INCH BAY
*2164	19 INCH LONGLEAF PINE
2165	12 INCH LAUREL OAK
2166	8 INCH OAK
2167	13 INCH PINE
2168	10 INCH DAHOON HOLLY
2169	17 INCH PINE
2170	12 INCH PINE
2171	12 LAUREL OAK
2172	15 INCH PINE
2173	14 INCH PINE
2174	12 INCH LAUREL OAK
2175	15 INCH PINE
*2176	20 INCH LONGLEAF PINE
2177	15 INCH PINE
2178	12 INCH PINE
2179	16 INCH PINE
2180	14 INCH PINE
2181	14 INCH PINE
2182	14 INCH PINE
2183	13 INCH PINE
2184	14 INCH PINE
2185	15 INCH PINE
2186	13 INCH PINE
2187	8 INCH PINE
2188	7 INCH OAK
2189	14 INCH PINE
2190	17 INCH PINE
2191	16 INCH PINE
2192	10 INCH PINE
2193	16 INCH PINE
2194	17 INCH PINE
2195	8 INCH OAK
*2196	18 LONGLEAF PINE
2197	9 INCH OAK
2198	TWIN AMERICAN HOLLY 6 10
2199	17 INCH LONGLEAF PINE
2200	17 INCH PINE
2201	12 INCH PINE
2202	17 INCH LONGLEAF PINE
2203	16 INCH PINE
2204	9 INCH PINE
2205	17 LONGLEAF PINE
2206	16 INCH PINE
2207	14 INCH PINE
2208	13 INCH PINE
2209	15 INCH PINE
2210	9 INCH OAK
2213	LONGLEAF PINE
*2214	19 INCH LONGLEAF PINE

Point #	Row Description
2216	7 INCH OAK
*2217	19 INCH LONGLEAF PINE
2218	8 INCH OAK
2219	13 INCH LONGLEAF
2220	QUAD 12 LAUREL OAKS
2221	6 INCH OAK
2222	8 INCH OAK
2223	14 INCH PINE
2224	16 INCH PINE
2225	8 INCH OAK
2226	12 INCH LAUREL OAK
2227	6 INCH OAK
2228	10 INCH LONGLEAF PINE
*2229	19 INCH LONGLEAF PINE
2230	15 INCH PINE
2231	13 INCH PINE
2232	15 INCH PINE
2233	13 INCH PINE
2234	8 INCH OAK
2235	13 INCH PINE
2236	13 INCH PINE
2237	12 INCH PINE
2238	9 INCH OAK
2239	16 INCH PINE
2240	14 INCH PINE
2241	14 INCH PINE
2242	14 INCH PINE
2243	14 INCH PINE
2244	14 INCH PINE
*2245	20 INCH LONGLEAF PINE
2246	8 INCH OAK
2247	13 INCH PINE
2248	12 INCH LAUREL OAK
2249	17 INCH LONGLEAF PINE
2250	17 INCH PINE
2251	9 INCH OAK
2252	14 INCH PINE
2253	17 INCH PINE
2254	8 INCH OAK
2255	17 INCH PINE
2256	14 INCH PINE
2257	16 INCH PINE
2258	16 INCH PINE
*2259	18 INCH LONGLEAF PINE
2260	15 INCH PINE
2270	15 INCH PINE
2271	15 INCH PINE
2272	16 INCH PINE
2273	10 INCH PINE
2274	14 INCH PINE
2275	7 INCH MAGNOLIA
2276	9 INCH MAGNOLIA
2277	6 INCH MAGNOLIA
2278	16 INCH PINE
2280	14 INCH PINE
2281	14 INCH PINE
2282	17 INCH SLASH PINE
2283	16 INCH PINE
2284	16 INCH PINE
2285	18 INCH SLASH PINE
2286	TWIN 7 INCH 7 INCH OAK
2287	22 INCH SLASH PINE
2288	15 INCH LONGLEAF PINE
2289	12 INCH PINE
2290	TWIN 6 INCH 6 INCH OAK
2291	14 INCH LONGLEAF PINE
2292	15 INCH PINE
2293	15 INCH PINE
2294	10 INCH AMERICAN HOLLY
2295	10 INCH AMERICAN HOLLY
2296	15 INCH PINE
2297	14 LONGLEAF PINE
2298	12 INCH LAUREL OAK
2299	14 INCH PINE
2300	12 INCH LAUREL OAK
2301	17 INCH PINE
2302	16 INCH LONGLEAF PINE
2303	12 INCH LONGLEAF OAK
2304	14 INCH PINE
2305	8 INCH OAK
2306	17 INCH LONGLEAF PINE
2307	15 INCH PINE
2308	17 INCH PINE
2309	13 INCH PINE
2310	15 INCH PINE

Point #	Row Description
2311	16 INCH PINE
2312	17 INCH PINE
2313	LAUREL OAK
2314	10 INCH DAHOON
2315	LAUREL OAK
2316	15 INCH PINE
2317	12 INCH LAUREL OAK
2318	10 INCH LAUREL OAK
2319	19 INCH SLASH PINE
2320	LAUREL OAK
2321	17 INCH SLASH PINE
2322	15 INCH LONGLEAF PINE
2323	14 INCH PINE
2324	11 INCH LAUREL OAK
2325	6 INCH OAK
2326	9 INCH OAK
2327	LAUREL OAK
2328	6 INCH OAK
2331	12 CHINESE TALLOW
2333	12 CHINESE TALLOW
2336	10 CHINESE TALLOW
2337	6 INCH PINE
2338	8 INCH PINE
2340	12 CHINESE TALLOW
2341	10 CHINESE TALLOW
2342	TWIN 7 10 CHINESE TALLOW
2345	16 INCH PINE
2346	8 INCH PINE
2347	14 INCH PINE
2348	11 INCH PINE
2349	8 INCH OAK
*2350	18 INCH LONGLEAF PINE
*2351	18 INCH LONGLEAF PINE
2352	QUAD OAK 6 6 5 5
2353	TWIN OAK 7 3
2354	9 INCH OAK
2355	TRIPLET 8 7 5 INCH OAK
2356	8 INCH PINE
2357	TRIPLET 6 6 6 OAK
2358	11 INCH PINE
2359	7 INCH OAK
2360	8 INCH PINE
2361	10 INCH PINE
2362	8 INCH OAK
*2364	12 INCH LOBLOLLY BAY
2365	8 INCH OAK
2366	6 INCH OAK
2367	18 INCH SLASH PINE
2379	11 IN PINE
*2380	14 INCH SAND LIVE OAK
2381	8 IN WATER OAK
2383	16 IN PINE
2384	16 INCH PINE
2385	6 INCH PINE
2391	11 INCH GUM
2392	6 INCH GUM
2393	6 INCH LAUREL
2394	18 IN SLASH PINE
2395	8 IN PINE
2396	11 LOBLOLLY BAY
2399	16 IN PINE
2400	9 IN WATER OAK
2402	16 IN PINE
2404	15 IN PINE
2405	13 IN PINE
2406	15 IN PINE
2408	19 IN SLASH PINE
2416	16 IN PINE
2417	13 IN PINE
2418	15 IN PINE
*2426	18 INCH LONGLEAF PINE
*2428	18 INCH LONGLEAF PINE
2432	12 IN PINE
2433	TRIPLE 9 9 9 LAUREL OAK
2435	TRIPLE 7 7 7 LAUREL OAK
2436	15 IN PINE
2437	6 IN OAK
2438	TWIN 7 7 LAUREL OAK
2439	TWIN 8 8 TWIN OAK
2441	TWIN 7 7 LAUREL OAK
2442	TWIN 9 9 LAUREL OAK
2443	10 IN PINE
2446	TWIN 10 11 LAUREL OAK
2447	TWIN 7 7 LAUREL OAK
2456	11 IN PINE

Point #	Row Description
2457	11 IN PINE
2458	9 IN PINE
2459	13 IN PINE
2460	7 IN PINE
2461	8 IN PINE
2462	6 IN PINE
2463	6 IN PINE
2464	8 IN PINE
2467	8 IN PINE
2468	17 IN PINE
*2469	16 INCH SAND LIVE OAK
2470	TWIN 10 12 LAUREL OAK
2471	17 IN PINE
2473	9 IN PINE
2474	9 IN PINE
2475	13 IN SLASH PINE
2476	15 IN PINE
2477	10 IN PINE
2478	7 IN PINE
2479	10 IN LAUREL OAK
2480	9 IN PINE
2481	10 IN PINE
2482	6 IN OAK
2483	TWIN 9 9 LAUREL OAK
*2484	TWIN 11 12 LOBLOLLY BAY
2486	8 IN PINE
2487	7 IN OAK
2488	10 IN LAUREL OAK
2489	8 IN PINE
2490	10 IN LAUREL OAK
2491	TWIN 10 10 LAUREL OAK
2493	7 IN OAK
2494	7 IN PINE
2495	TWIN 8 9 LAUREL OAK
2496	9 IN PINE
2497	8 IN OAK
*2498	19 INCH LONGLEAF PINE
2499	10 IN LAUREL OAK
*2500	12 INCH SAND LIVE OAK
2501	9 IN PINE
2502	10 IN LAUREL OAK
*2503	18 INCH LONGLEAF PINE
2504	6 IN PINE
2505	10 LOBLOLLY BAY
2506	6 IN PINE
2507	8 IN PINE
2508	10 IN PINE
2509	9 IN PINE
2510	9 IN PINE
2511	13 IN LAUREL OAK
2512	10 IN PINE
2513	10 IN PINE
2514	6 IN PINE
2515	14 IN LAUREL OAK
2517	13 INCH PINE
2518	12 INCH PINE
2519	15 INCH PINE
*2520	14 INCH SAND LIVE OAK
2521	17 INCH PINE
*2522	12 INCH SAND LIVE OAK
2523	12 INCH PINE
2524	16 INCH PINE
2525	12 INCH PINE
2526	15 INCH PINE
2527	10 INCH PINE
2529	16 IN PINE
2530	12 IN PINE
2531	12 IN PINE
2532	11 IN PINE
2534	8 INCH LAUREL
2535	7 INCH LAUREL
2536	15 IN PINE
*2537	15 LOBLOLLY BAY
2538	14 IN OAK
2539	12 IN PINE
2540	10 IN PINE
2541	MULTI 6 6 8 8 OAK
2542	11 IN PINE
2543	10 IN PINE
2544	8 IN PINE
2545	11 IN PINE
2546	7 IN PINE
2547	6 IN PINE
2551	TWIN 10 9 LAUREL OAK

Point #	Row Description
2552	TWIN 9 9 OAK
2556	10 PINE
2557	TWIN OAK 7 6
*2558	12 INCH SAND LIVE OAK
2560	10 PINE
2561	14 PINE
2563	6 PINE
2564	12 PINE
2565	19 LAUREL OAK
2568	14 PINE
*2569	19 INCH LONGLEAF PINE
2571	8 OAK
2572	8 OAK
2574	14 PINE
2577	12 PINE
2578	12 PINE
2580	10 PINE
2581	14 PINE
2582	6 PINE
2583	12 PINE
2585	10 PINE
2586	10 PINE
2590	20 SLASH PINE
2591	8 PINE
2592	10 PINE
2593	12 PINE
2594	16 LONGLEAF PINE
2595	10 PINE
2599	TWIN LAUREL OAK 18 10
2604	6 OAK
2605	TWIN 10 8 OAK
2606	6 OAK
2608	TRIPLE 14 10 6 LAUREL OAK
2613	12 PINE
2614	12 PINE
2615	12 PINE
2616	8 PINE
2617	14 PINE
2618	12 PINE
2619	8 PINE
*2620	19 INCH LONGLEAF PINE
2623	8 PINE
2624	16 PINE
2625	6 PINE
2626	14 PINE
2627	6 PINE
2628	6 PINE
*2634	21 INCH LONGLEAF PINE
2637	16 PINE
*2638	11 INCH SAND LIVE OAK
2642	6 PINE
2643	8 OAK
2644	6 OAK
2645	8 PINE
2646	8 PINE
2648	TRIPLE 6 5 4 OAK
2649	10 OAK
*2650	11 INCH SAND LIVE OAK
2651	10 OAK
2653	TWIN 10 10 LAUREL OAK
2654	8 PINE
2655	8 PINE
2656	10 PINE
2657	6 OAK
2658	12 PINE
2659	10 PINE
2660	6 OAK
2661	TRIPLE 6 4 3 OAK
2662	8 OAK
*2663	20 INCH LONGLEAF PINE
2664	8 OAK
2665	12 PINE
2666	12 PINE
2667	PENTA 8 8 8 6 6 OAK
2668	8 PINE
2669	12 PINE
2670	10 PINE
2671	8 PINE
2673	8 OAK
2674	10 PINE
2675	6 PINE
2676	8 PINE
2677	14 PINE
2678	12 PINE
2679	16 PINE

Point #	Row Description
2680	14 PINE
2681	14 PINE
2682	10 LAUREL OAK
2693	20 LONGLEAF PINE
2694	20 SLASH PINE
2695	16 PINE
2696	10 PINE
2697	18 SLASH PINE
2698	10 PINE
2699	18 SLASH PINE
2700	16 PINE
2701	14 PINE
2702	16 PINE
2703	14 PINE
2704	6 OAK
2705	6 OAK
2706	8 OAK
2707	6 OAK
*2708	12 LAUREL OAK
2709	20 INCH LONG LEAF PINE
2710	8 PINE
2711	10 LAUREL OAK
2712	12 PINE
2713	6 PINE
2714	10 PINE
2715	14 PINE
2716	8 INCH BAY
2717	10 PINE
2718	8 OAK
2719	6 OAK
2720	6 PINE
2721	6 OAK
2729	16 LAUREL OAK
2730	16 PINE
2731	10 PINE
2732	8 PINE
2733	10 PINE
2734	18 SLASH PINE
2735	10 LAUREL OAK
2736	24 SLASH PINE
2737	12 PINE
2738	12 PINE
2739	8 PINE
2740	10 PINE
2741	6 PINE
2742	16 LAUREL OAK
2743	14 PINE
2744	12 PINE
2745	22 SLASH PINE
2746	10 PINE
2747	14 PINE
2748	10 PINE
2749	10 PINE
2752	8 PINE
2753	12 PINE
2754	12 PINE
2755	8 PINE
2756	10 PINE
2757	10 PINE
2758	10 PINE
2759	8 OAK
2760	6 OAK
2761	14 PINE
2762	10 PINE
2763	14 PINE
2764	8 PINE
2765	12 PINE
2766	8 PINE
2767	10 PINE
2768	14 PINE
2769	10 PINE
2770	14 PINE
2771	14 PINE
2772	8 PINE
2773	10 PINE
2774	6 PINE
2775	16 PINE
2776	14 PINE
2777	8 PINE
2778	10 PINE
2779	8 PINE
2780	10 PINE
2781	12 PINE
2786	8 INCH PINE
2787	6 INCH OAK

Point #	Row Description
2788	12 INCH PINE
2789	8 INCH PINE
2790	8 INCH OAK
2791	16 INCH PINE
2792	14 INCH PINE
2793	18 INCH SLASH PINE
*2804	8 OAK
2805	10 INCH SAND LIVE OAK
2806	9 SAND LIVE OAK
2809	8 PINE
2810	10 PINE
2811	8 PINE
2812	6 PINE
2813	8 PINE
2814	10 PINE
2815	10 PINE
2816	8 PINE
2817	12 PINE
2818	12 PINE
2821	6 PINE
2823	6 INCH CHINESE TALLOW
2824	6 INCH CHINESE TALLOW
*2825	8 INCH CHINESE TALLOW
*2826	7 INCH CHINESE TALLOW
2827	QUAD 9 10 11 12 SAND LIVE OAK
2828	19 INCH LONGLEAF PINE
2829	6 OAK
2830	14 PINE
2831	15 SLASH PINE
2832	10 PINE DR
2833	16 PINE DR
2834	16 PINE
2838	9 INCH CHINESE TALLOW
2839	8 CHINESE TALLOW
2840	10 CHINESE TALLOW
2841	QUAD 10 6 4 CHINESE TALLOW
2842	10 CHINESE TALLOW
2843	6 CHINESE TALLOW
2844	6 CHINESE TALLOW
2845	TRIPLE 8 6 6 CHINESE TALLOW
2849	7 INCH CHINESE TALLOW
2876	TRIPLET CHINA BERRY 12 12 10
2878	7 INCH CHINESE TALLOW
2879	QUAD CHINA BERRY 12 11 9 6
2880	18 CHINA BERRY
2881	18 CHINA BERRY
2882	18 CHINESE TALLOW
2883	10 CHINESE TALLOW
2884	14 CABBAGE PALM
2886	10 INCH CHINESE TALLOW
2887	8 INCH CHINESE TALLOW
2888	TWIN 10 8 INCH CHINESE TALLOW
2889	8 INCH CHINESE TALLOW
2890	CHINESE TALLOW CLUSTER 14 10 10 8 6 6
2891	6 INCH CHINESE TALLOW
2892	10 INCH CHINESE TALLOW
2893	6 INCH CHINESE TALLOW
2894	18 INCH CAMPHOR
2895	6 INCH CHINESE TALLOW
2897	8 INCH OAK
2898	8 INCH OAK
2899	6 INCH OAK
2900	6 INCH OAK
1790	7 INCH BAY
1791	6 INCH BAY

SEE CITY OF DELAND TREE PROTECTION
AREA WORKSHEET FOR CALCULATIONS

Point #	Row Descripton

SHADED = TREES TO BE SAVED

* Pt #	Row Descripton

SPECIMEN TREES MARKED WITH AND ASTERISK

MICHAEL W. RADCLIFFE ENGINEERING, INC.
2611 S.E. Lake Weir Avenue Ocala, FL 34471 (352) 629-5500 FAX (352) 629-1010
Certificate No. EB-0006198 • Michael W. Radcliffe P.E. #31170 • Christopher A. Gwin P.E. #66568
www.radcliffeengineering.com

COPYRIGHT © 2023 Michael W. Radcliffe Engineering, Inc. All Rights Reserved.

Project Name: Meadowlea Village Ph. 4&5
Sheet Name: Tree Chart

Designed: MWR | Scale: N/A
Drawn: BIL | Project: 2022-04
Checked: MWR | Date: 10-14-2022
File: Meadowlea Village Ph. 4-7.dwg

Date:	By:	Revisions:
3/27/23	BIL	REVISED PER CIT OF DELAND COMMENTS.

Sheet No. C009 of C021

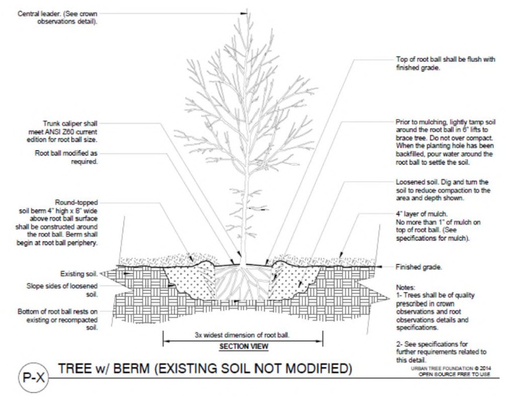

P-X TREE w/ BERM (EXISTING SOIL NOT MODIFIED)

Date: December 11, 2015 | TREE PLANTING WITH BERM -- EXISTING SOIL NOT MODIFIED | P110

City of DeLand Standard Details

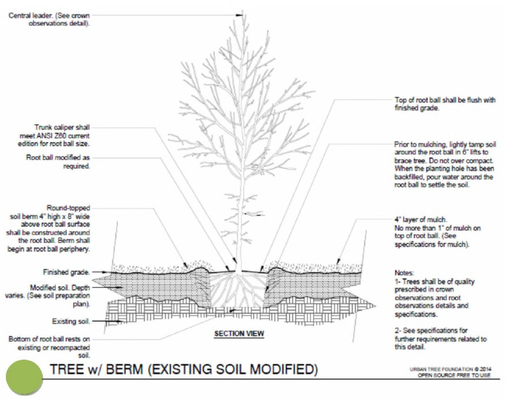

TREE w/ BERM (EXISTING SOIL MODIFIED)

Date: December 11, 2015 | TREE PLANTING WITH BERM -- EXISTING SOIL MODIFIED | P115

City of DeLand Standard Details

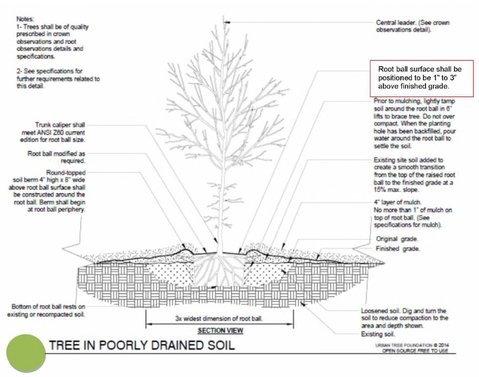

TREE IN POORLY DRAINED SOIL

Date: December 11, 2015 | TREE IN POORLY DRAINED SOIL | P100

City of DeLand Standard Details

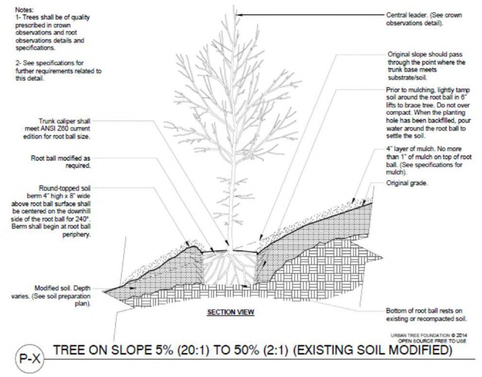

P-X TREE ON SLOPE 5% (20:1) TO 50% (2:1) (EXISTING SOIL MODIFIED)

Date: December 11, 2015 | TREE ON SLOPE -- EXISTING SOIL MODIFIED | P125

City of DeLand Standard Details

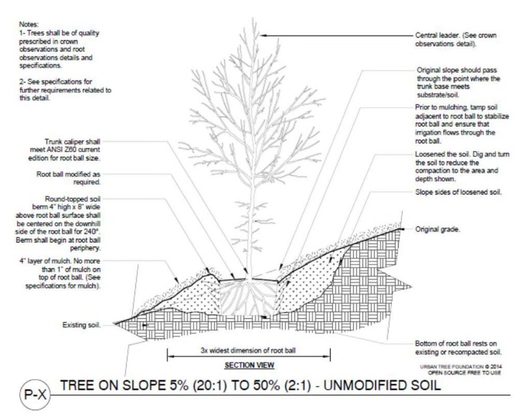

P-X TREE ON SLOPE 5% (20:1) TO 50% (2:1) - UNMODIFIED SOIL

Date: December 11, 2015 | TREE ON SLOPE – UNMODIFIED SOIL | P120

City of DeLand Standard Details

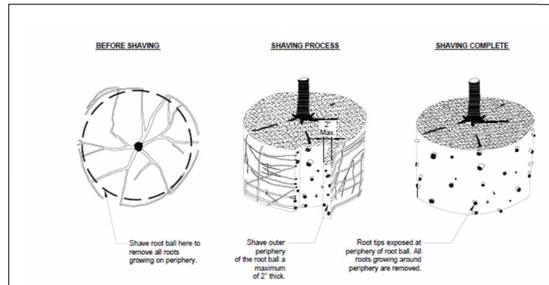

ROOT BALL SHAVING CONTAINER DETAIL

Date: December 11, 2015 | ROOT BALL SHAVING CONTAINER DETAIL | P140

City of DeLand Standard Details

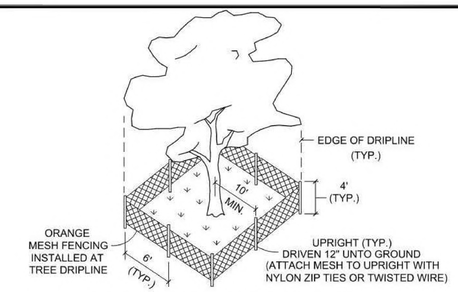

TYP. CITY TREE BARRICADE DETAIL

N.T.S.

TREE BARRICADES ARE REQUIRED AROUND ALL TREES WHICH HAVE BEEN DESIGNATED ON THE SITE PLAN TO BE RETAINED AND PROTECTED. PRIOR TO ANY CLEARING OR CONSTRUCTION ACTIVITY OCCURRING ON THE SITE, TREE BARRICADES SHALL BE CONSTRUCTED BY THE CONTRACTOR AND APPROVED BY THE CITY. TREE BARRICADES SHALL BE PLACED AT THE EDGE OF THE DRIPLINE OR A MINIMUM OF 10' FROM THE TRUNK OF THE TREE, WHICH EVER IS GREATER.

FOR THE BARRIER THE CITY RECOMMENDS SAFETY BARRICADE FENCING.

NOTE: EXISTING TREES IN LANDSCAPE BUFFER SHALL ALSO BE PROTECTED.

DATE: JANUARY 31, 2023 | **TREE BARRICADE DETAIL** | **M112**

City of DeLand - Standard Details

MINIMUM TREE PLANTING SIZE PER CITY OF DELAND MUNICODE SEC.33-57.05(b)2

Revision:	By:	Date:
REVISED PER CIT OF DELAND COMMENTS.	BIL	3/27/23

Designer: MWR
Drawn: BIL
Checked: MWR
Scale: N.I.S.
Project: 2022-04
Date: 10-14-2022
File: Meadowlea Village Ph. 4-7.dwc

MICHAEL W. RADCLIFFE ENGINEERING, INC.
3801 S.E. Lake Weir Avenue Ocala, FL 34471 (352) 629-5300 FAX (352) 629-1010
Certificate No. EB 0006198 • Michael W. Radcliffe P.E. #31170 • Christopher A. Geib P.E. #66568
www.radcliffeengineering.com

COPYRIGHT © 2023 Michael W. Radcliffe Engineering, Inc. All Rights Reserved

Project Name: Meadowlea Village Ph. 4&5
Sheet Name: Landscape Details

Sheet No. C010 of C021

X:\MWRE Projects\Meadowlea MHP\2022-04 Meadowlea Village Ph. 4-7\Design\CADD\Meadowlea Village Ph. 4-7.dwg 3/28/2023 1:07 PM

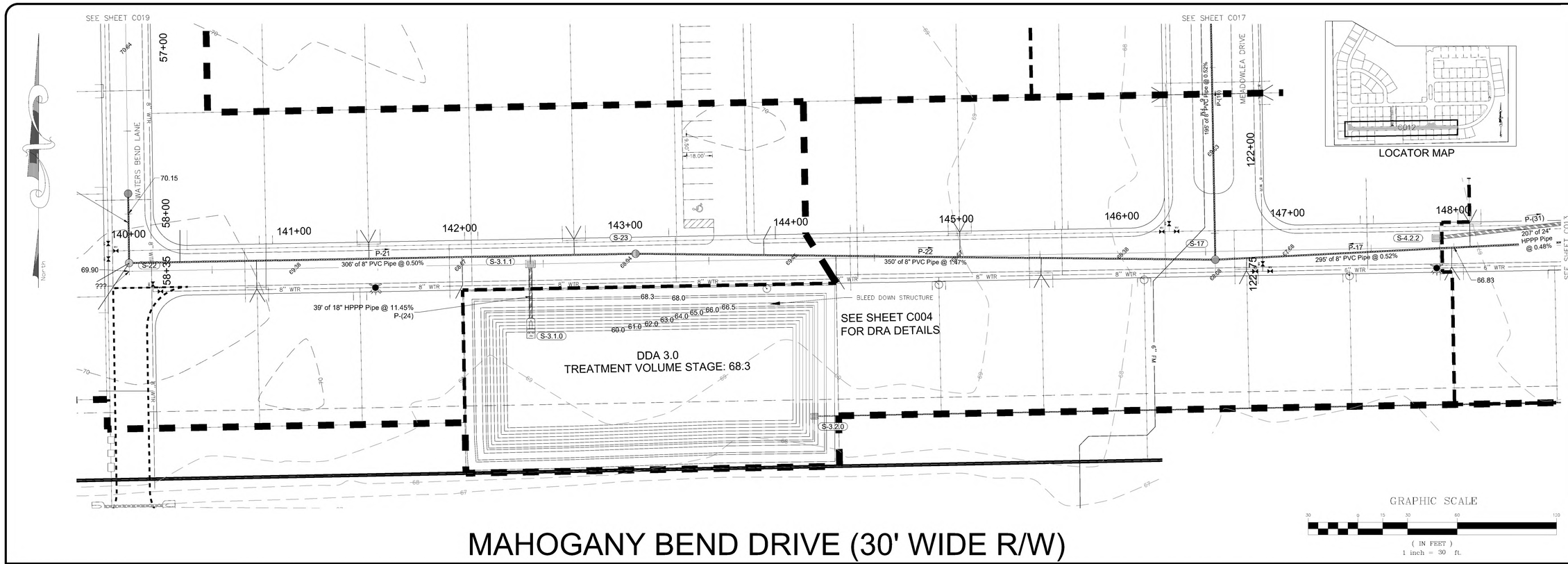

MAHOGANY BEND DRIVE (30' WIDE R/W)

HORIZONTAL: 1" = 30'
VERTICAL: 1" = 3'

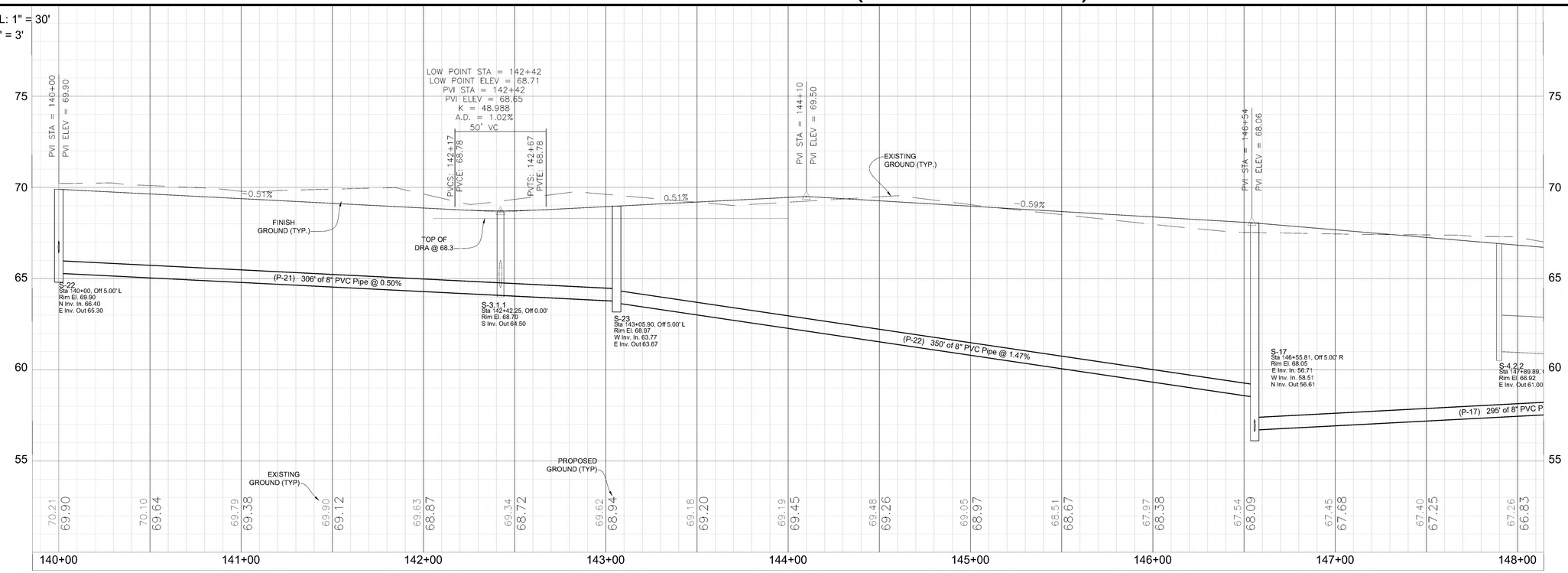

Date:	By:	Revisions:
3/27/23	BIL	REVISED PER OT OF DELAND COMMENTS

Designed: MWR
Drawn: BIL
Checked: MWR
Scale: 1" = 30'
Project: 2022-04
Date: 10-14-2022
File: Meadowlea Village Ph. 4-7.dwg

MICHAEL W. RADCLIFFE ENGINEERING, INC.
2411 S.E. Lake Weir Avenue • Ocala, FL 34480 • (352) 629-5300 • FAX (352) 629-5301
Certificate No. 6 Registered Professional Engineers • Michael W. Radcliffe P.E. #31176 • Christopher A. Lewis P.E. #58646
www.radcliffeengineering.com

Copyright © 2023 Michael W. Radcliffe Engineering, Inc. All Rights Reserved

Project Name: Meadowlea Village Ph. 4&5
Sheet Name: Plan / Profile Mahogany Bend Drive

Sheet No. C012 of C021

X:\MWRE Projects\Meadowlea MHP\2022-04 Meadowlea Village Ph. 4-7\Design\CADD\Meadowlea Village Ph. 4-7.dwg 3/28/2023 1:12 PM

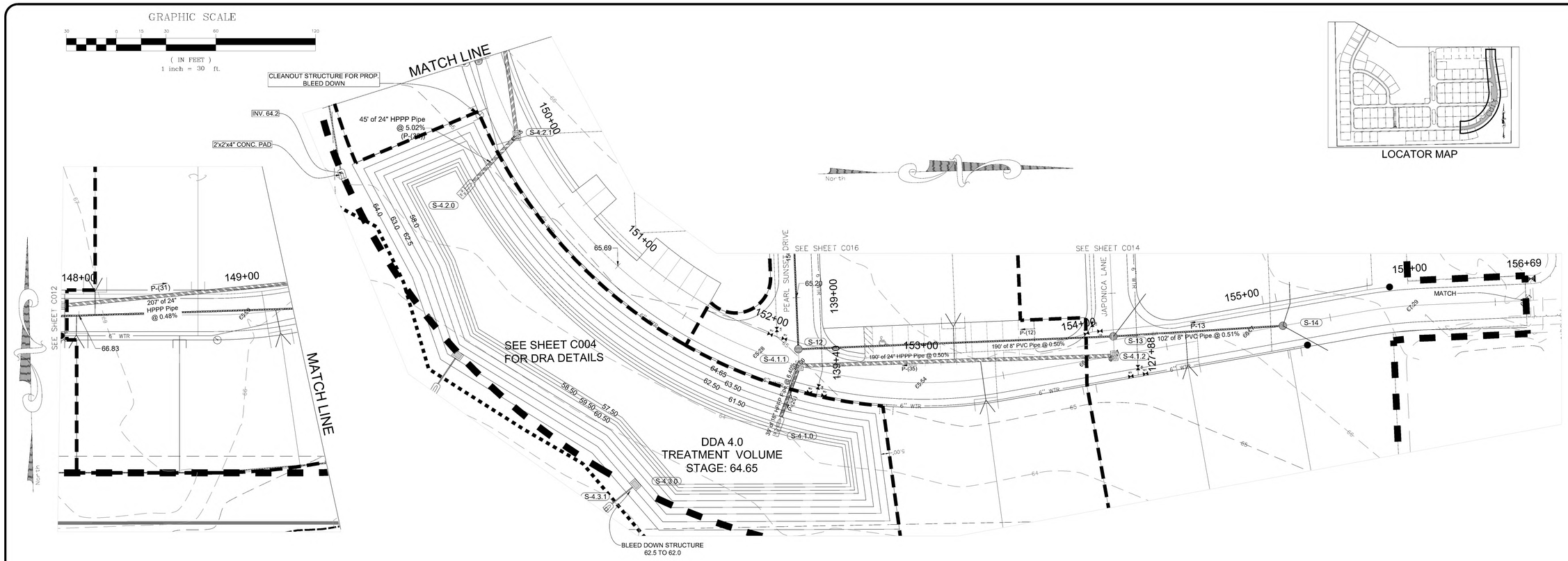

MAHOGANY BEND DRIVE (30' WIDE R/W)

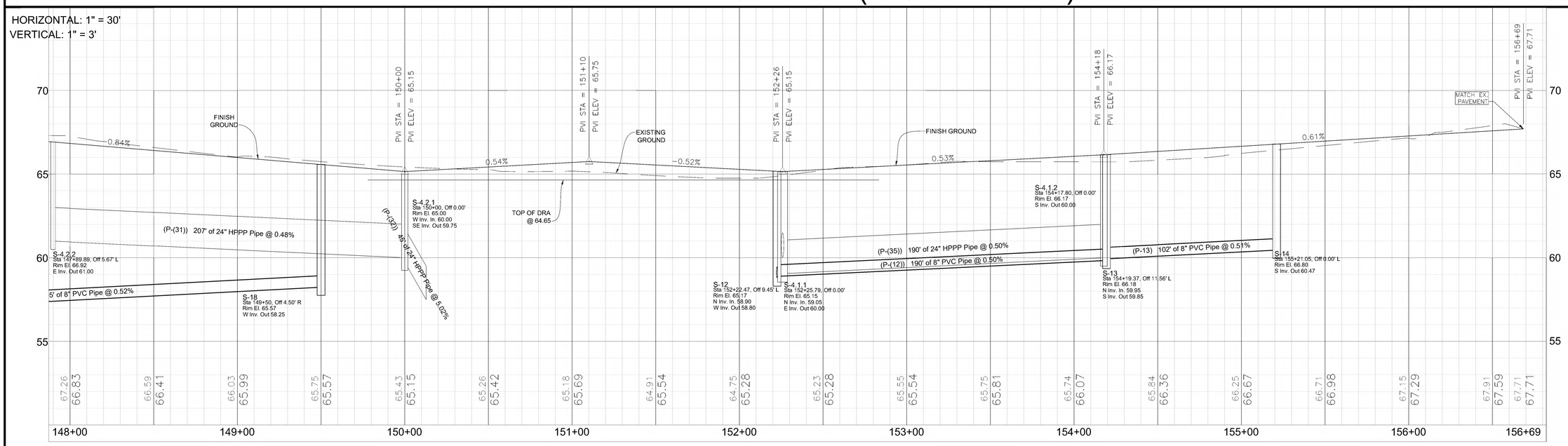

Revisions		
Date:	By:	
3/27/23	BIL	REVISED PER OT OF DELAND COMMENTS.

Engineer: MWR
Drawn: BIL
Scale: 1" = 30'
Project: 2022-04
Checked: MWR
Date: 10-14-2022
File: Meadowbrook Village Ph. 4-7.dwg

MICHAEL W. RADCLIFFE ENGINEERING, INC.
2811 S.E. Lake Weir Avenue Ocala, FL 34471 (352) 629-5500 FAX (352) 629-1010
Certificate No. EB-0006198 • Michael W. Radcliffe P.E. #31170 Christopher A. Lewis P.E. #66568

Plan / Profile
Mahogany Bend Drive

Project Name:
Sheet Name:

Sheet No.
C013
of

X:\MWRE Projects\Meadowbrook MHP\2022-04 Meadowbrook Village Ph. 4-7\Dwgs\CADD\Meadowbrook Village Ph. 4-7.dwg 3/28/2023 1:15 PM

GRAPHIC SCALE

(IN FEET)
1 inch = 30 ft.

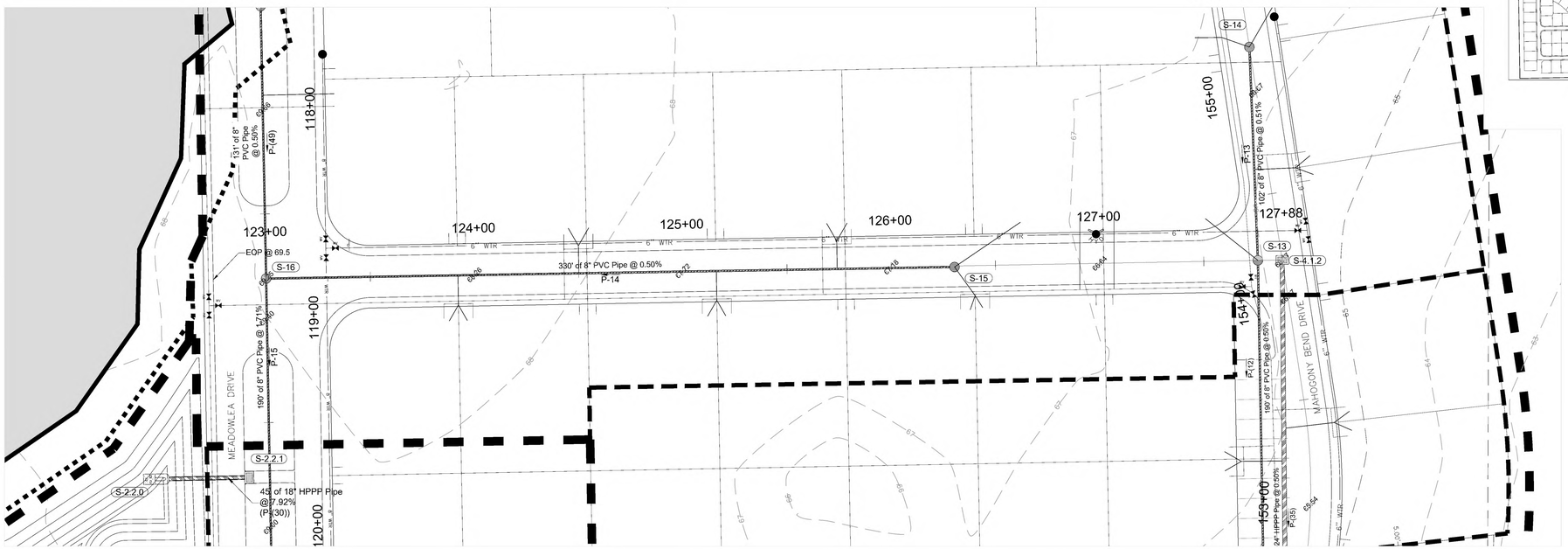

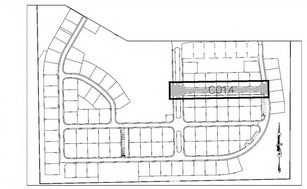

LOCATOR MAP

JAPONICA LN (30' WIDE R/W)

HORIZONTAL: 1" = 30'
VERTICAL: 1" = 3'

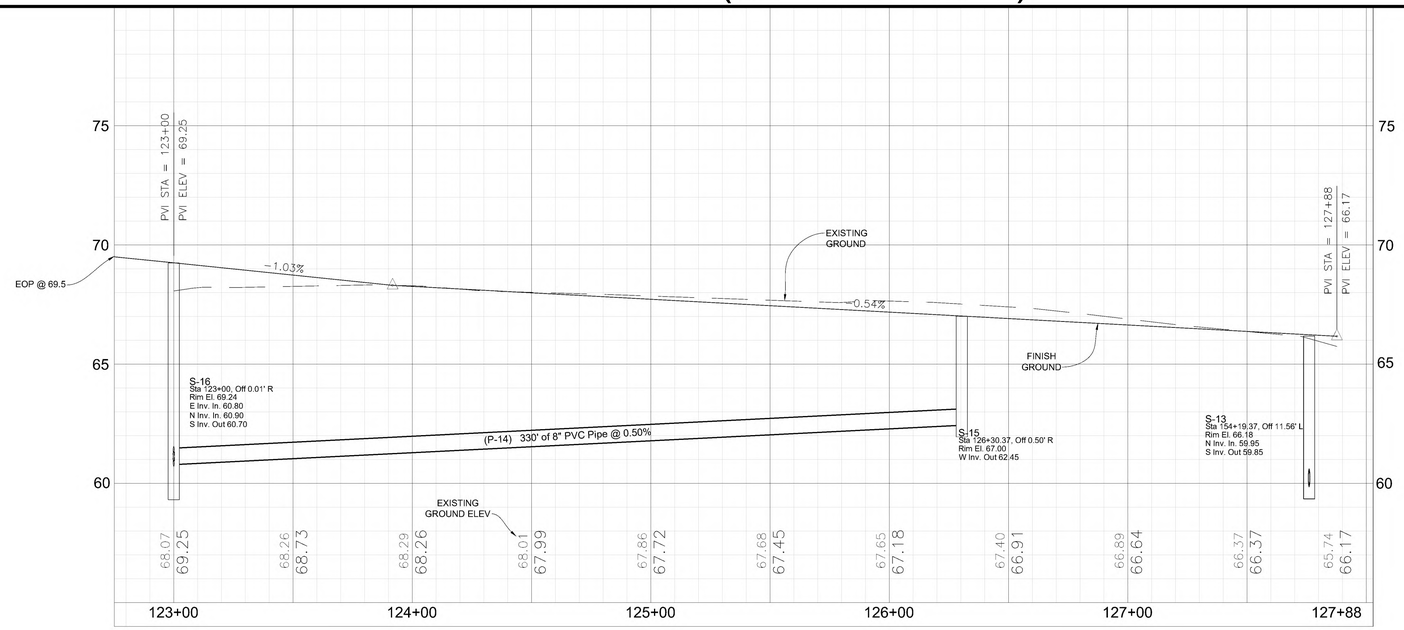

Revisions:		
Date:	By:	
3/27/23	BIL	REVISED PER OJT OF DELAND COMMENTS.

Designed: MWR
Drawn: BIL
Checked: MWR
Scale: 1" = 30'
Project: 2022-04
Date: 10-14-2022
File: Meadowlea Village Ph. 4-7.dwg

MICHAEL W. RADCLIFFE ENGINEERING, INC.
1811 S.E. Lake Weir Avenue • Ocala, FL 34471 • (352) 629-3560 • FAX (352) 629-9015
Certificate No. Eb-0005198 • Michael W. Radcliffe P.E. (#11170) • Christopher A. Cahill P.E. (#65568
www.radcliffeengineering.com

Copyright © 2023 Michael W. Radcliffe Engineering, Inc. All Rights Reserved

Project Name: Meadowlea Village Ph. 4&5
Sheet Name: Plan / Profile Japonica Ln

Sheet No.
C014
of
C021

X:\MWRE Projects\Meadowlea MHP\2022-04 Meadowlea Village Ph. 4-7\Design\CADD\Meadowlea Village Ph. 4-7.dwg 3/28/2023 1:15 PM

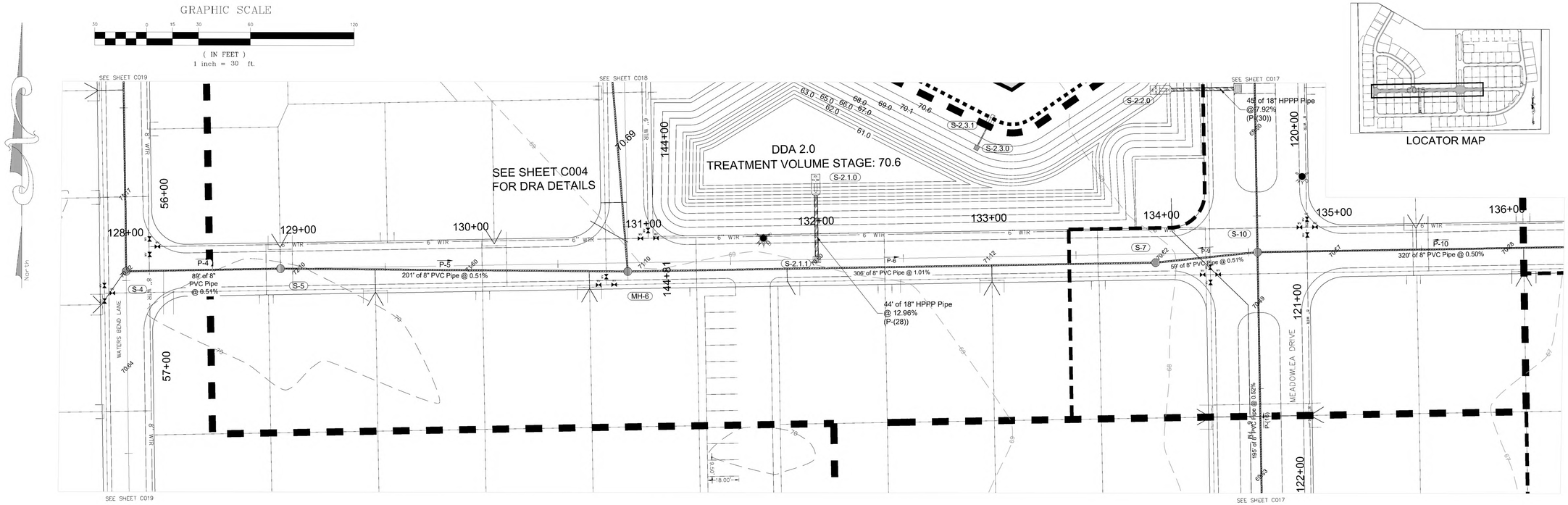

PEARL SUNSET DRIVE (30' WIDE R/W)

HORIZONTAL: 1" = 30'
VERTICAL: 1" = 3'

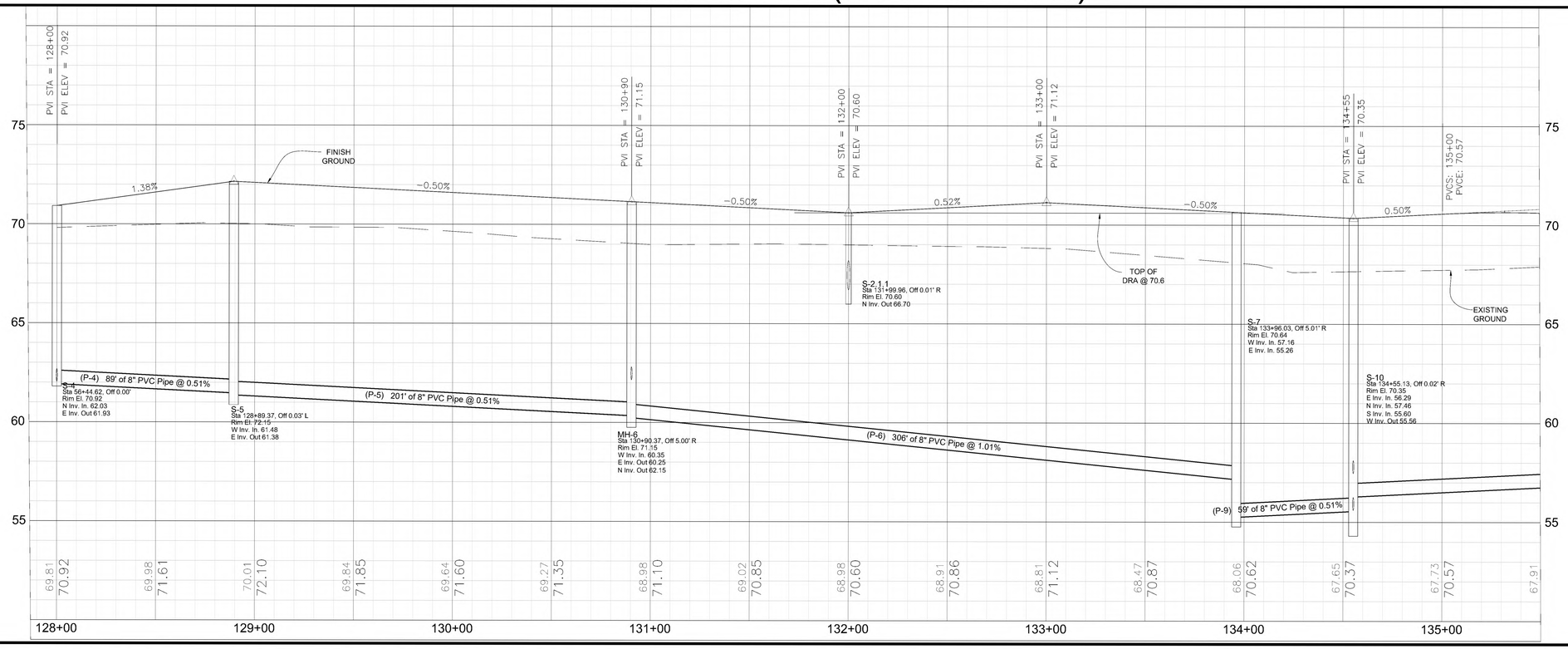

Date:	By:	Revisions:
3/27/23	BIL	REVISED PER OT OF DELAND COMMENTS

Assigned: MWR
Drawn: BIL
Checked: MWR
Scale: 1" = 30'
Project: 2022-04
Date: 10-14-2022
File: Meadowlea Village Ph. 4-7.dwg

MICHAEL W. RADCLIFFE ENGINEERING, INC.
1861 S.E. Lake Weir Avenue - Ocala, FL 34471 - (352) 629-5500 - FAX (352) 629-1015
Certificate No. EB-0005198 - Michael W. Radcliffe P.E. #35170 - Christopher A. Gwin P.E. #66568
www.radcliffeengineering.com

MWR Engineering, Inc. All Rights Reserved

Project Name: Meadowlea Village Ph. 4&5
Sheet Name: Plan / Profile Pearl Sunset Drive

Sheet No.
C015
of
C021

X:\MWRE Projects\Meadowlea MHP\2022-04 Meadowlea Village Ph. 4-7\Design\CADD\Meadowlea Village Ph. 4-7.dwg 3/28/2023 3:23 PM

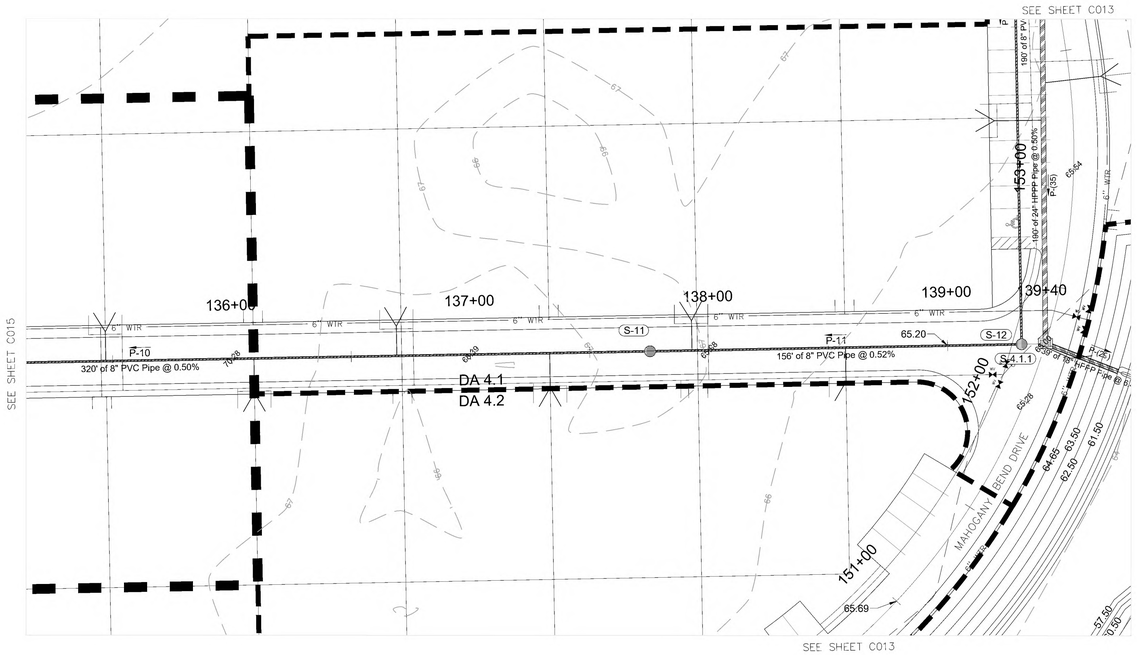

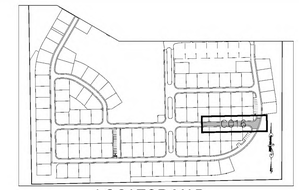

LOCATOR MAP

NORTH

GRAPHIC SCALE

30 0 15 30 60 120

(IN FEET)
1 inch = 30 ft.

PEARL SUNSET DRIVE (30' WIDE R/W)

HORIZONTAL: 1" = 30'
VERTICAL: 1" = 3'

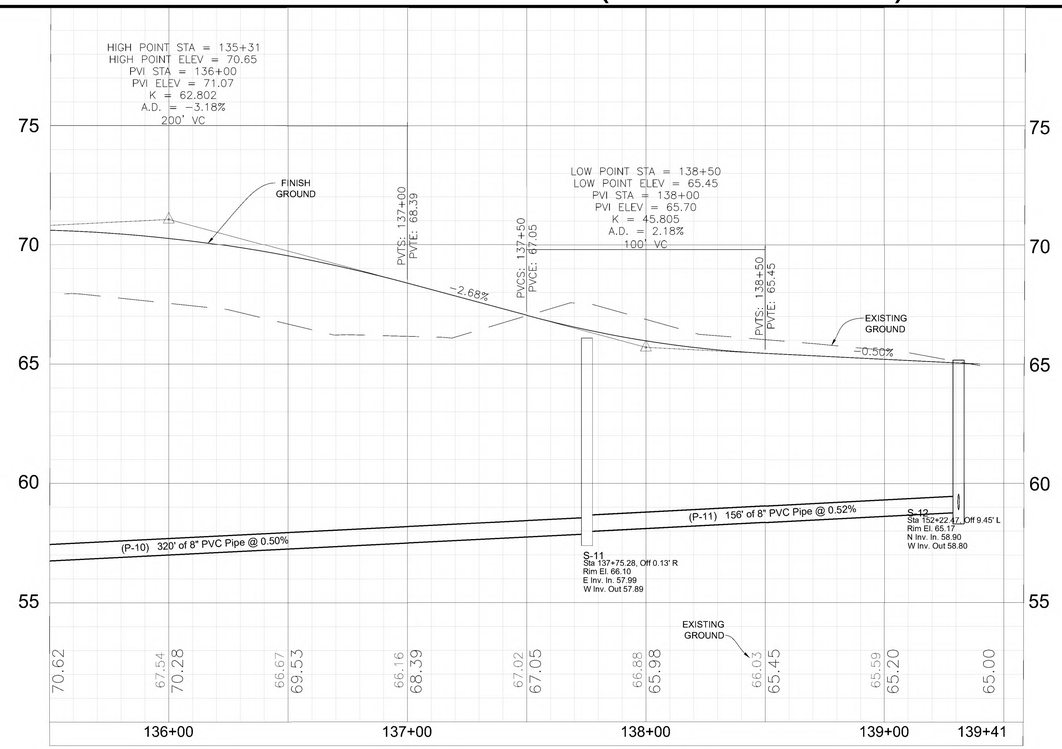

Revisions:		
Date:	By:	
3/27/23	BIL	REVISED PER OT OF DELAND COMMENTS.

Designed: MWR
Drawn: BIL
Checked: MWR
Scale: 1" = 30'
Project: 2022-04
Date: 10-14-2022
File: Meadowlea Village Ph. 4-7.dwg

MICHAEL W. RADCLIFFE ENGINEERING, INC.
2811 S.E. Lake Weir Avenue • Ocala, FL 34471 • (352) 624-5500 • FAX (352) 624-0101
Certificate No. EB-0006198 • Michael W. Radcliffe P.E. #31170 • Christopher A. Cash P.E. #65588
www.radcliffeengineering.com

COPYRIGHT © 2023 Michael W. Radcliffe Engineering, Inc. All Rights Reserved

Project Name: Meadowlea Village Ph. 4&5
Sheet Name: Plan / Profile Pearl Sunset Drive

Sheet No.
C016
of
C021

X:\MWRE Projects\Meadowlea MHP\2022-04 Meadowlea Village Ph. 4-7\Design\CADD\Meadowlea Village Ph. 4-7.dwg 3/28/2023 1:18 PM

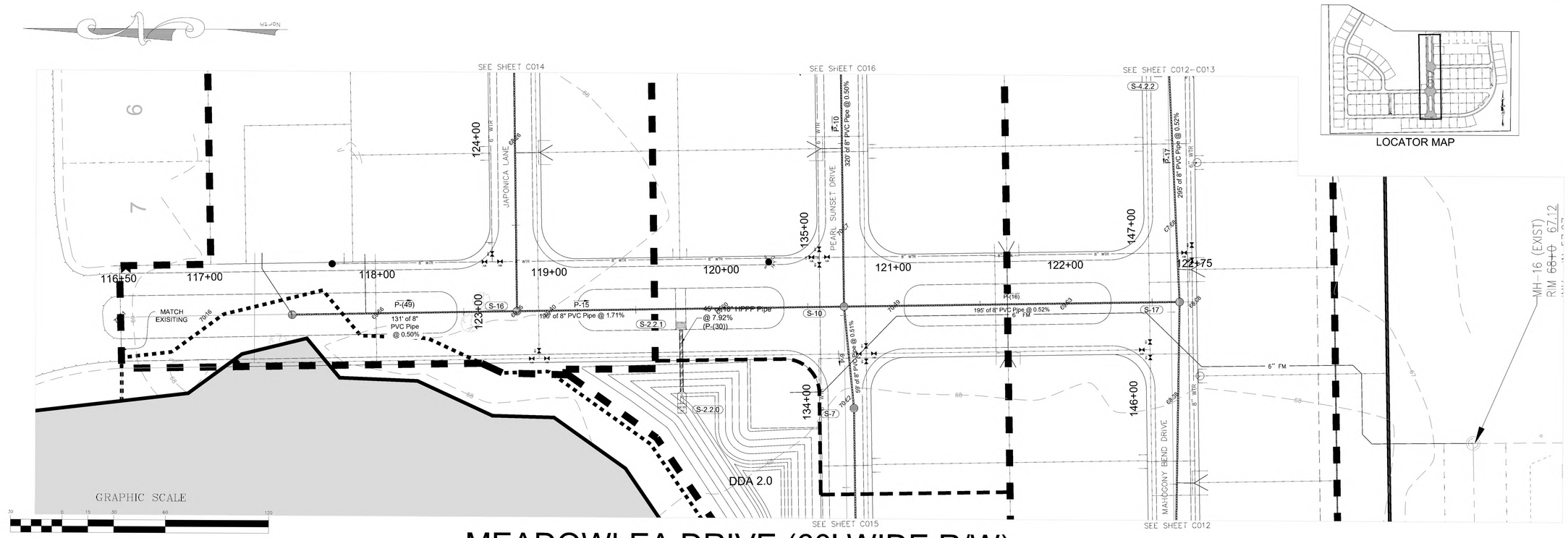

LOCATOR MAP

MEADOWLEA DRIVE (60' WIDE R/W)

HORIZONTAL: 1" = 30'
VERTICAL: 1" = 3'

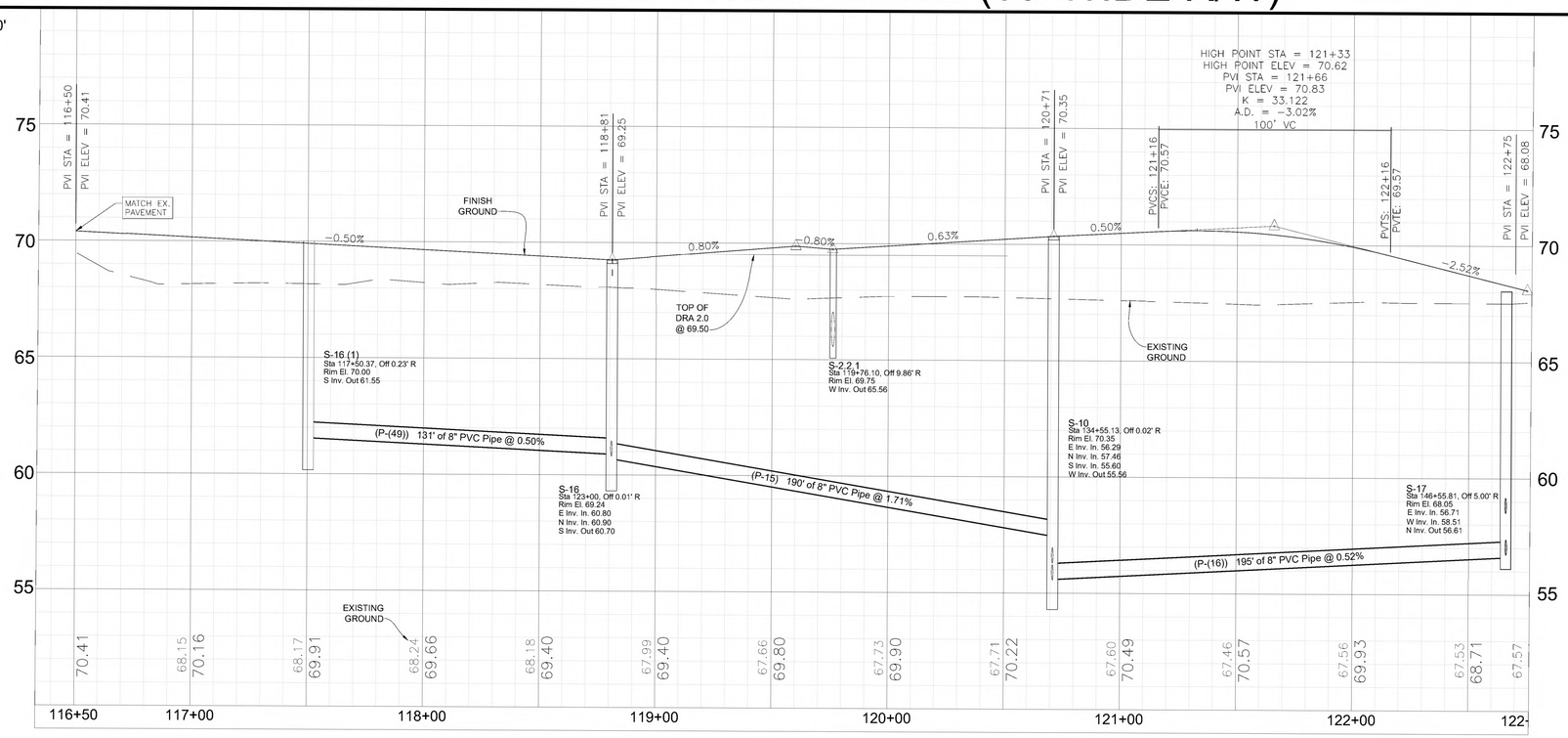

Revisions:		
Date:	By:	
3/27/23	BIL	REVISED PER CIT OF DELAND COMMENTS.

Designed: MWR
Drawn: BIL
Checked: MWR
File: Mastermaster Village Ph. 4-7.dwg

Scale: 1" = 30'
Project: 2022-04
Date: 10-14-2022

MICHAEL W. RADCLIFFE ENGINEERING, INC.
2611 S.E. Lake Weir Avenue Ocala, FL 34471 (352) 629-5500 FAX (352) 629-0170
Certificate No. EB-0006198 - Michael W. Radcliffe P.E. #31170 Christopher A. Gwin P.E. #95568
www.radcliffeengineering.com

COPYRIGHT © 2023 Michael W. Radcliffe Engineering, Inc. All Rights Reserved

Project Name: Meadowlea Village Ph. 4&5
Sheet Name: Plan / Profile Meadowlea Drive

Sheet No.
C017
of
C021

X:\MWE Projects\Meadowlea MHP\2022-04 Meadowlea Village Ph. 4-7\Design\CADD\Meadowlea Village Ph. 4-7.dwg 3/29/2023 1:19 PM

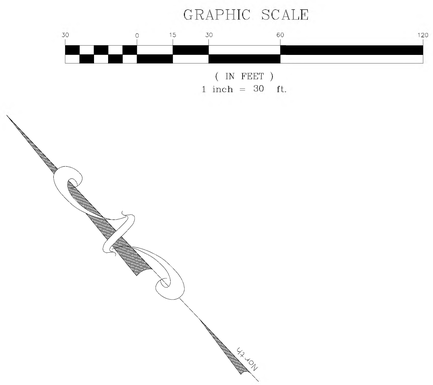

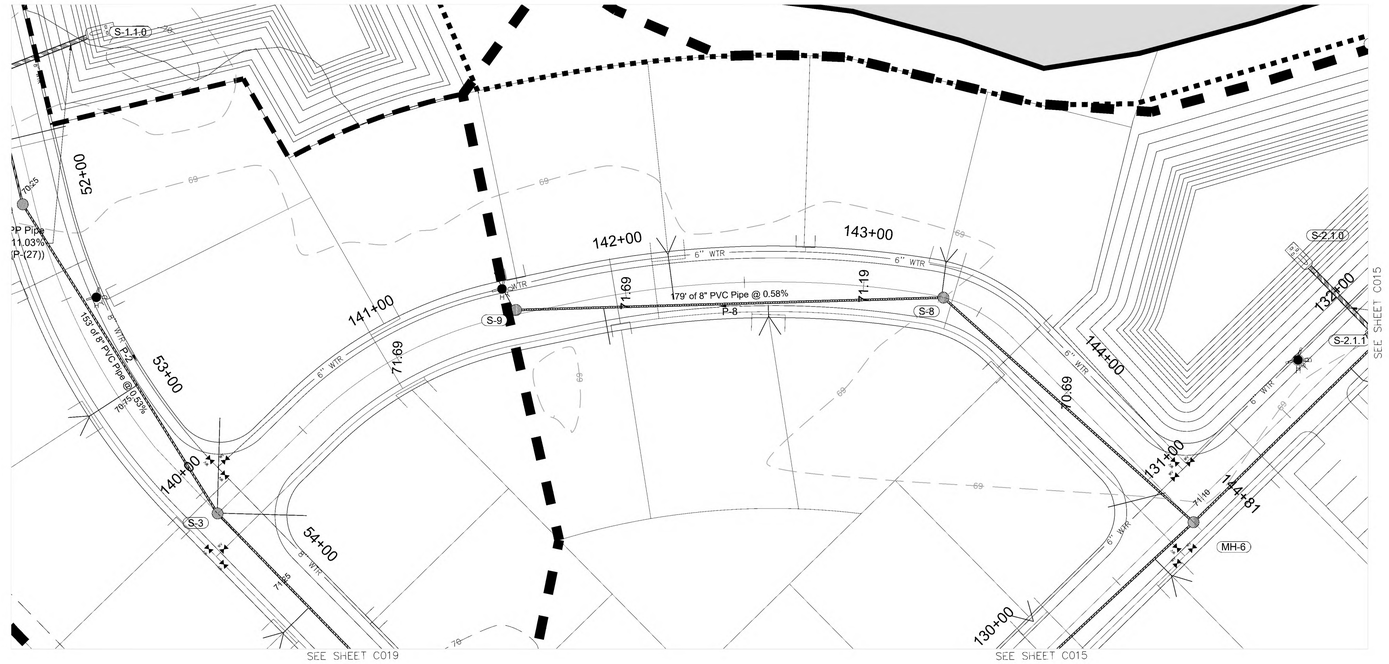

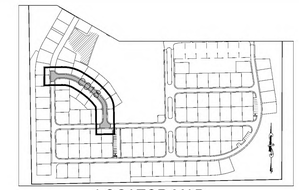

PALM WARBLER PATH (30' WIDE R/W)

HORIZONTAL: 1" = 30'
VERTICAL: 1" = 3'

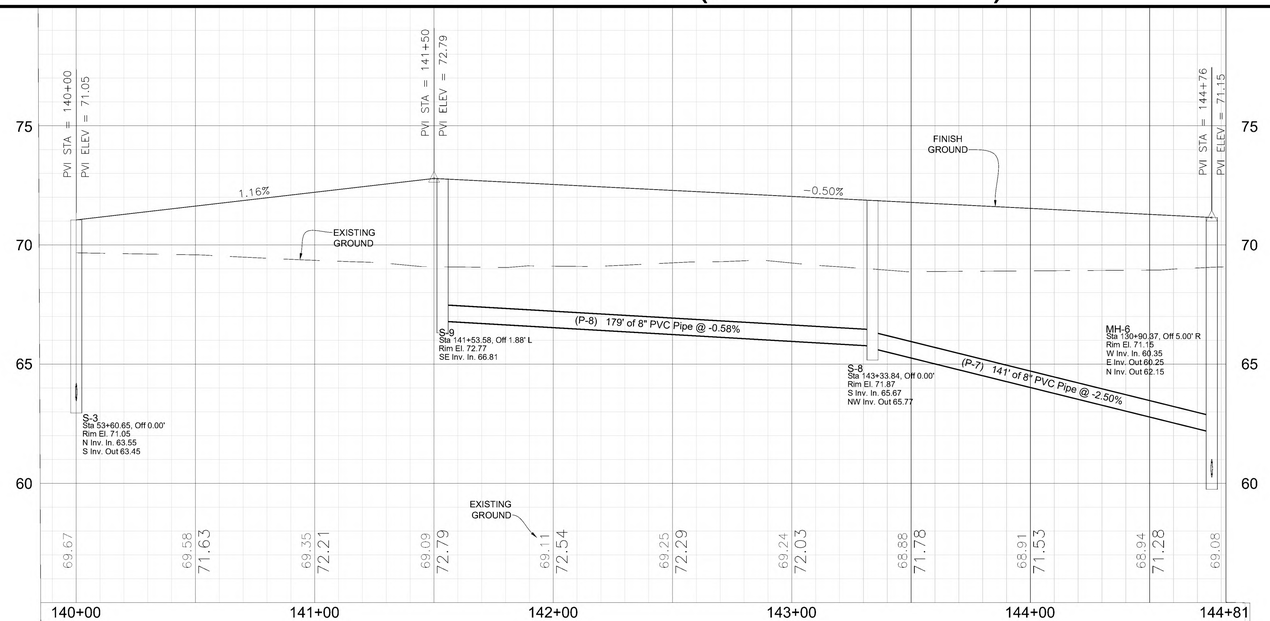

Date:	By:	Revisions:
3/27/23	BIL	REVISED PER CIT OF DELAND COMMENTS.

Designed: MWR
Drawn: BIL
Checked: MWR
Scale: 1" = 50'
Project: 2022-04
Date: 10-14-2022
File: Meadowlea Village Ph. 4-7.dwg

MICHAEL W. RADCLIFFE ENGINEERING, INC.
1811 S.E. Lake Weir Avenue Ocala, FL 34471 (352) 629-3500 FAX (352) 629-8015
Certificate No. Eb-0005198 - Michael W. Radcliffe P.E. #31170 Christopher A. Cahill P.E. #65588
www.radcliffeengineering.com

Copyright © 2023 Michael W. Radcliffe Engineering, Inc. All Rights Reserved

Project Name: Meadowlea Village Ph. 4&5
Sheet Name: Plan / Profile Palm Warbler Path

Sheet No.
C018
of
C021

X:\MWRE Projects\Meadowlea MHP\2022-04 Meadowlea Village Ph. 4-7\Design\CADD\Meadowlea Village Ph. 4-7.dwg 3/28/2023 3:22 PM

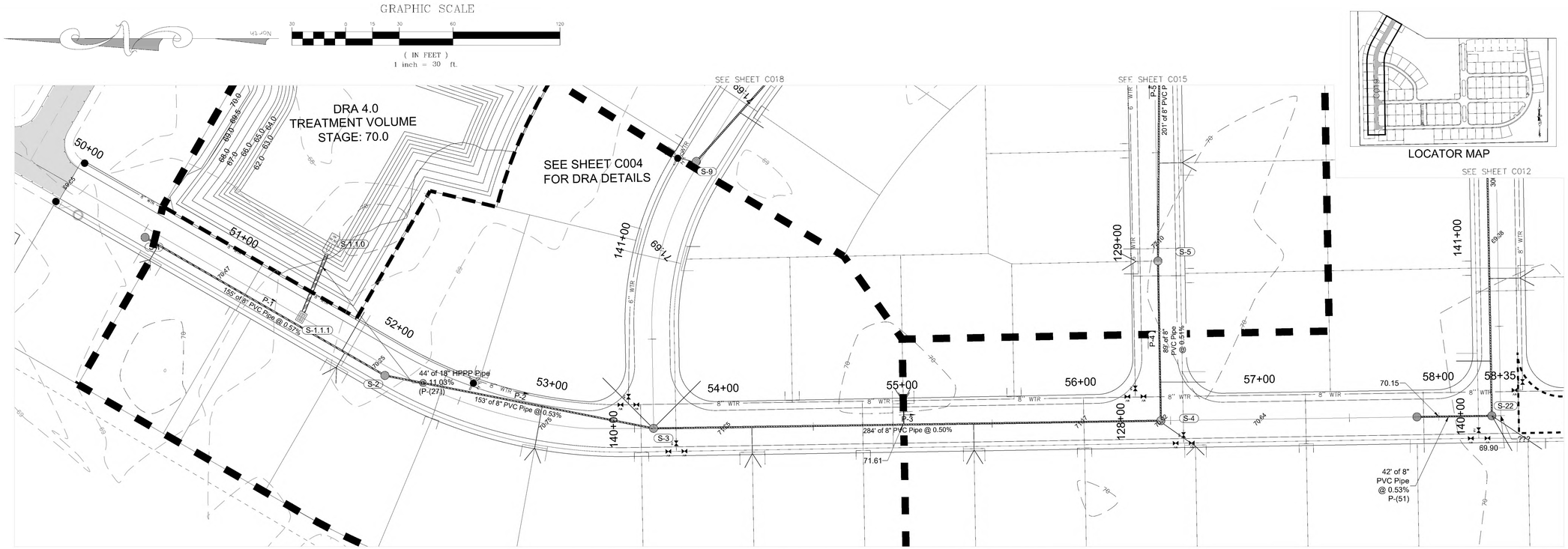

WATERS BEND LANE (30' WIDE R/W)

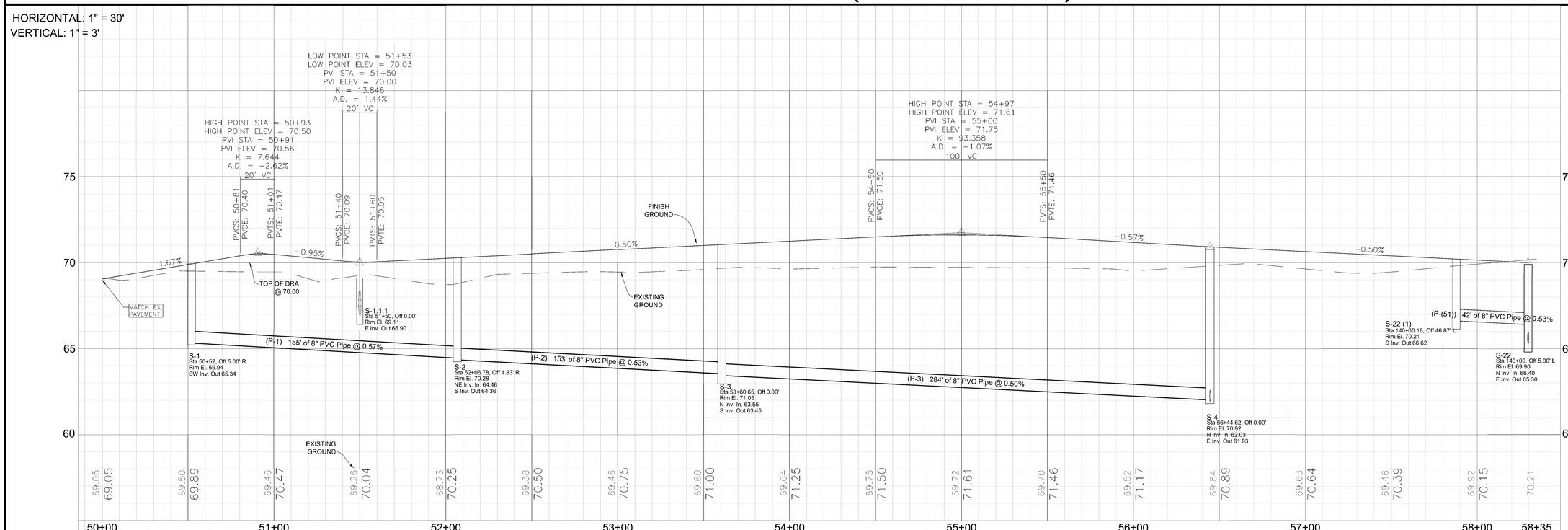

Revisions:			
Date:	By:		
3/27/23	BIL	REVISED PER OT OF DELAND COMMENTS.	

Designed: MWR	Scale: 1" = 30'		
Drawn: BIL	Project: 2022-04		
Checked: MWR	Date: 10-14-2022		
File: Meadowlea Village Ph. 4-7.dwg			

MICHAEL W. RADCLIFFE ENGINEERING, INC.
7811 S.E. Lake Weir Avenue, Ocala, FL 34471 (352) 624-5500 FAX (352) 624-0115
Certificate No. EB-0006198 • Michael W. Radcliffe P.E. #31170 Christopher A. Cahill P.E. #65568
www.radcliffeengineering.com

Copyright © 2023 Revised & Reserved Michael W. Radcliffe Engineering, Inc. All Rights Reserved

Project Name: Meadowlea Village Ph. 4&5

Sheet Name: Plan / Profile Waters Bend Lane

Sheet No. C019 of C021

X:\MWRE Projects\Meadowlea MHP\2022-04 Meadowlea Village Ph. 4-7\Design\CADD\Meadowlea Village Ph. 4-7.dwg 3/28/2023 3:26 PM

GRAPHIC SCALE

50 0 25 50 100 200

(IN FEET)
1 inch = 50 ft.

NORTH

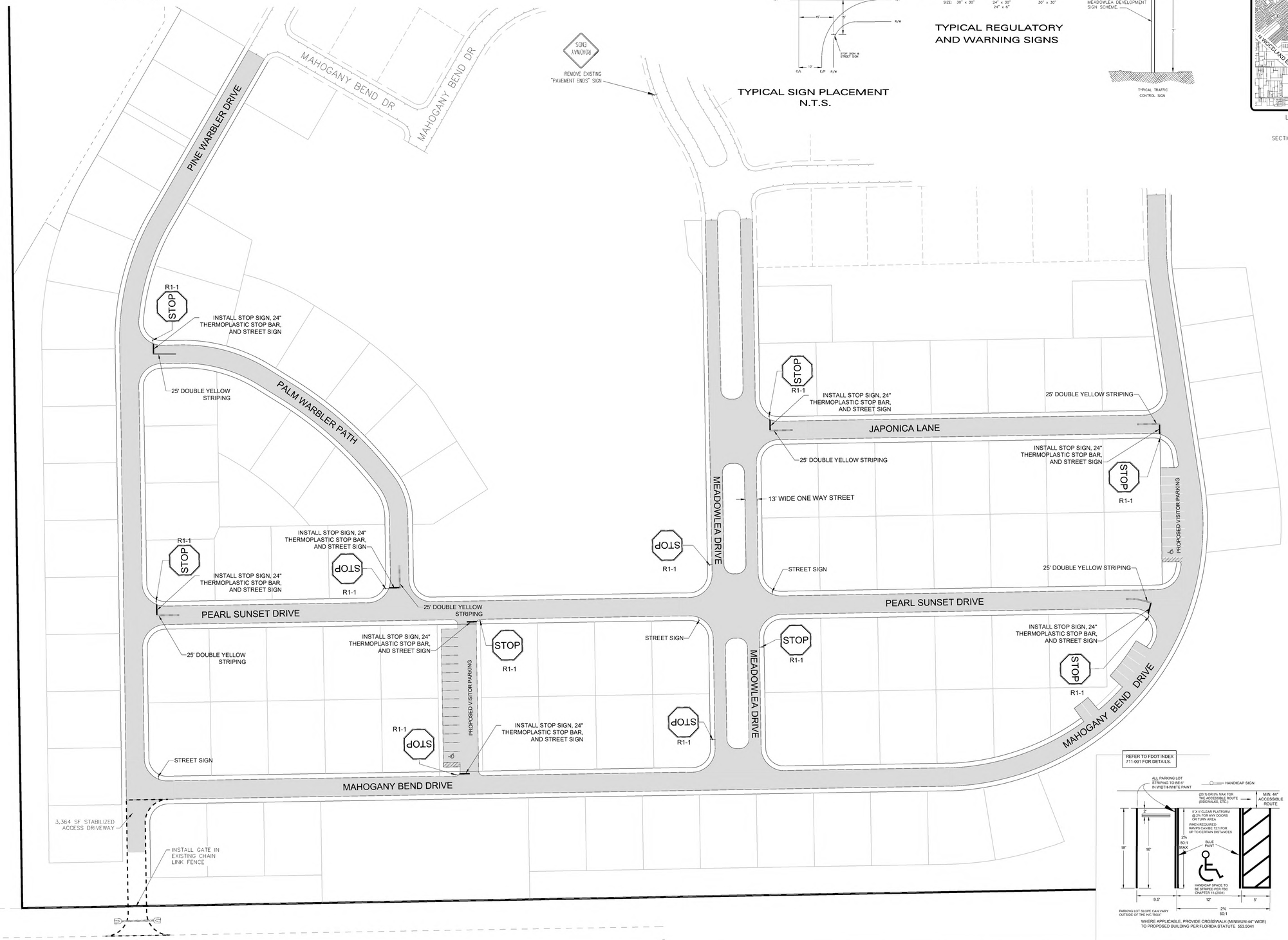

TYPICAL SIGN PLACEMENT
N.T.S.

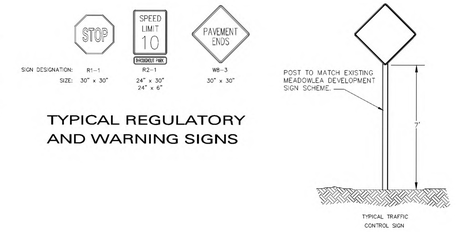

TYPICAL REGULATORY AND WARNING SIGNS

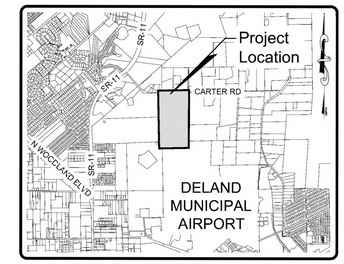

LOCATION MAP
SCALE: 1" = 4000'
DELAND, FLORIDA
SECTION 27, TOWNSHIP 16 SOUTH, RANGE 30 EAST

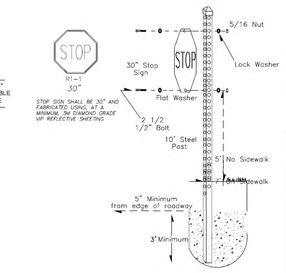

Sign Detail
Not to Scale

Revisions:		
Date:	By:	
3/27/23	BIL	REVISED PER CIT OF DELAND COMMENTS

Designed: MWR
Drawn: BIL
Checker: MWR
Scale: 1" = 50'
Project: 2022-04
Date: 10-14-2022
File: Meadowlea Village Ph. 4-7.dwg

MICHAEL W. RADCLIFFE ENGINEERING, INC.
2811 S.E. Lake Weir Avenue • Ocala, FL 34471 (352) 629-5500 FAX (352) 629-1010
Certificate No. EB-0006198 • Michael W. Radcliffe P.E. #31170 • Christopher A. Gwin P.E. #66568
www.radcliffeengineering.com

Copyright © 2023 Michael W. Radcliffe Engineering, Inc. All Rights Reserved

Project Name: Meadowlea Village Ph. 4&5
Sheet Name: Signage and Striping

Sheet No.
C020
of
C021

X:\MWRE Projects\Meadowlea Mvl\2022-04 Meadowlea Village Ph. 4-7\Design\CADD\Meadowlea Village Ph. 4-7.dwg 3/28/2023 1:23 PM

Meadowlea Village
A COVE COMMUNITY

MEADOWLEA MHP - PH. 4-7 SITE PLAN
CITY OF DELAND, FLORIDA

GRAPHIC SCALE
60 0 30 60 120 240
(IN FEET)
1 inch = 60 ft.

LEGEND:

PROP D.D.A. 2.0	DRAINAGE RETENTION AREA
	SILT FENCE LOCATION
	INLET PROTECTION

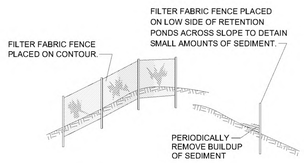

1. FILTER FABRIC FENCE SHALL BE EMBEDDED IN THE SOIL A MIN. OF 4".
2. INSPECTION SHALL BE FREQUENT AND REPAIR OR REPLACEMENT SHALL BE MADE PROMPTLY AS NEEDED.
3. FILTER FABRIC FENCE SHALL BE REMOVED WHEN IT HAS SERVED ITS USEFULNESS SO AS NOT TO BLOCK OR IMPEDE STORM FLOW OR DRAINAGE.

SILT FENCE DETAIL
Not to Scale

SILT FENCE PROTECTION
IN DITCHES WITH INTERMITTENT FLOW
Not to Scale

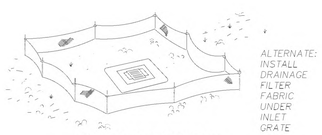

SILT FENCE PROTECTION
IN DITCHES WITH INTERMITTENT FLOW
Not to Scale

EROSION CONTROLS & BEST MANAGEMENT PRACTICES (BMP's)

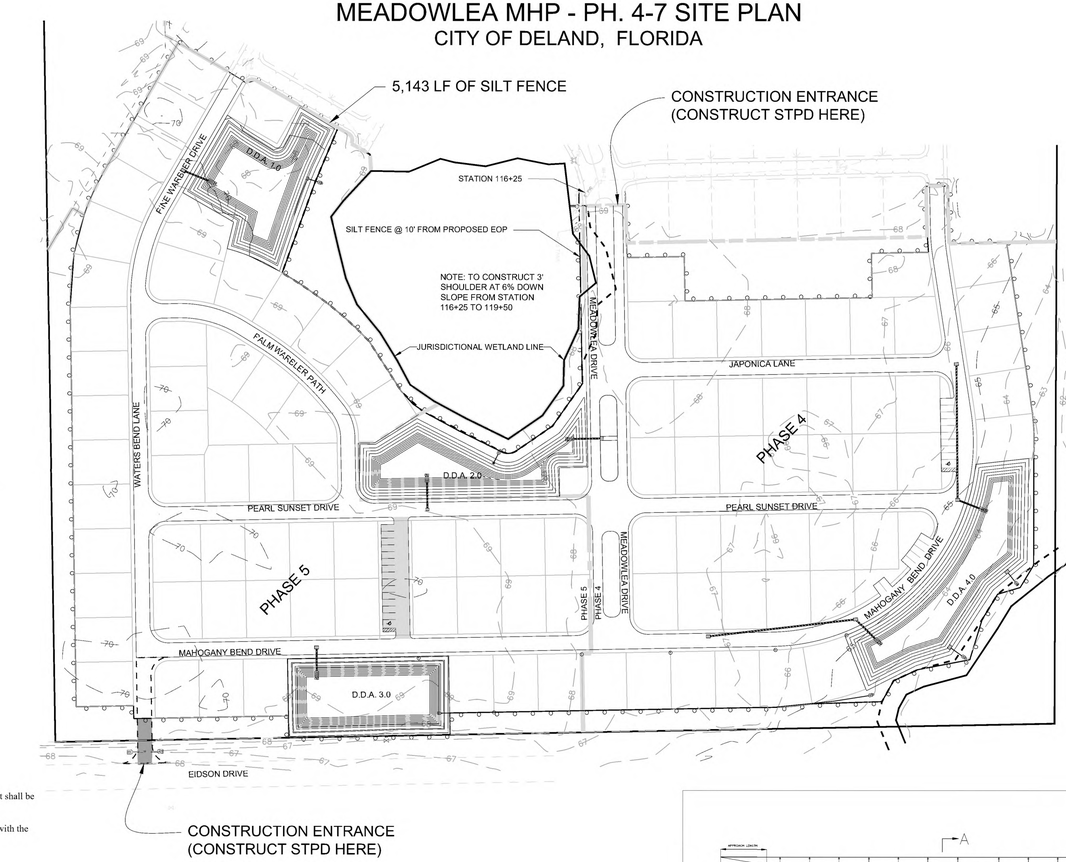

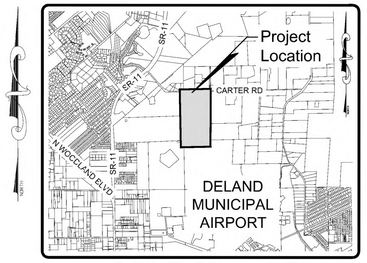

LOCATION MAP
SCALE: 1" = 4000'
DELAND, FLORIDA
SECTION 27, TOWNSHIP 16 SOUTH, RANGE 30 EAST

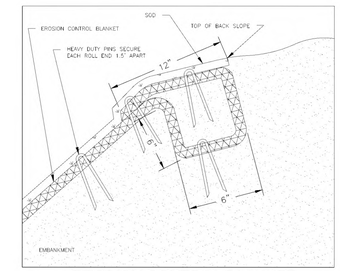

EROSION CONTROL BLANKET
GROUND FASTENING DETAIL
Not to Scale

INSTALL TOTAL OF 2,517 LF
FABRIC SILT FENCE

CITY OF DELAND PROJECT
No. SP22-211

General Notes:

1. A copy of the Notice of Intent (NOI) or letter from the Department of Environmental Protection (DEP) confirming coverage under this Generic Permit shall be posted at the construction site in a prominent place for public viewing (such as alongside a building permit).
2. The discharge of hazardous substances or oil in the stormwater discharge(s) from a facility or activity shall be prevented or minimized in accordance with the applicable stormwater pollution prevention plan for the facility or activity.
3. The permittee shall provide for compliance with the terms and schedule of this plan beginning with the initiation of construction activities.
4. Permittee shall adhere to the State of Florida DEP Generic Permit for Stormwater Discharge from Large and Small Construction Activities.
5. Preserve existing vegetation where attainable and stabilize disturbed portions of the site to prevent erosion. Stabilization measures include permanent seeding, sod, preservation of existing mature vegetation and protection of existing trees. Stabilization measures shall be initiated as soon as practicable, but in no case more than 7 days, in portions of the site where construction activities have temporarily or permanently ceased.
6. Each plan shall include a description of structural practices, to divert flows from exposed soils, store flows, retain sediment on-site, or otherwise limit runoff and the discharge of pollutants from exposed areas of the site. Such practices may include silt fences, swales, check dams, storm drain inlet protection, permanent sediment basins or Drainage Retention Areas (D.R.A.'s).
7. Construct temporary Sediment Control Basins at each point of discharge into D.R.A.'s.
8. Controls for Other Potential Pollutants.
   (1) Waste Disposal. The plan shall assure that waste, such as discarded building materials, chemicals, litter, and sanitary waste are properly controlled in accordance with all applicable state, local, and federal regulations. This permit does not authorize the discharge of solid materials, including building materials, to surface waters of the State or an Municipal Separate Storm Sewer System (MS4).
   (2) The plan shall assure that off-site vehicle tracking of sediments and the generation of dust is minimized.
   (3) The plan shall be consistent with applicable State and local waste disposal, sanitary sewer or septic system regulations.
   (4) The plan shall address the proper application rates and methods for the use of fertilizers, herbicides and pesticides at the construction site and set forth how these procedures will be implemented and enforced. Nutrients shall be applied only at rates necessary to establish and maintain vegetation.
   (5) The plan shall ensure that the application, generation, and migration of toxic substances is limited and that toxic materials are properly stored and disposed.
9. **A qualified inspector (provided by the operator) shall inspect all points of discharge into surface waters of the State or a Municipal Separate Storm Sewer System (MS4); disturbed areas of the construction site that have not been finally stabilized; areas used for storage of materials that are exposed to precipitation; structural controls; and, locations where vehicles enter or exit the site, at least once every seven calendar days and within 24 hours of the end of a storm that is 0.50 inches or greater in accordance with the Generic Permit.**
10. The permittee shall retain copies of stormwater pollution prevention plans and all reports required by this permit, and records of all data used to complete the NOI to be covered by this permit, for a period of at least three years from the date that the site is finally stabilized.
11. The permittee shall retain a copy of the stormwater pollution prevention plan and all reports, records and documentation required by this permit at the construction site, or an appropriate alternative location as specified in the NOI, from the date of project initiation to the date of final stabilization.
12. The permittee shall submit a completed Notice of Termination (NOT) (DEP Form 62-621.300(6)), signed in accordance with Part VII.C. of this permit, within 14 days of final stabilization of the site to terminate coverage under this permit.
13. A permittee shall submit a NOI to the following address:

    NPDES Stormwater Notices Center, MS# 2510
    Florida Department of Environmental Protection
    2600 Blair Stone Road
    Tallahassee, Florida 32399-2400

14. Projects that discharged stormwater associated with construction activity to a MS4 shall submit a copy of the NOI to the operator of the MS4.

Notes:

1. All existing storm water drainage patterns and channels outside the construction areas shown on these plans are to be maintained. The contractor shall notify the engineer if the work appears to interrupt an existing storm water drainage pattern. The contractor shall maintain a clear path for all surface water drainage structures and ditches during all phases of construction such that impact to construction and/or surrounding facilities is minimized. The contractor shall be responsible for any erosion, sediment transport, disturbed foundations, impact to structures, and any other damage caused during construction.
2. The contractor shall prevent the discharge of sediment due to construction operations. Approved erosion control devices shall be installed to prevent discharge of sediment into a dry or wet watercourse. Recommended erosion control shall consist of silt fence, or other erosion control methods as shown or approved by the project engineer. All new and existing drain pipes and structures shall be flushed clean after construction.
3. Provide erosion control blanket for all slopes 2:1 (horizontal to vertical) or steeper.
5. Swales and disturbed areas shall be sodded or seeded and mulched as soon as practical.
6. Should additional erosion and sedimentation controls be needed, then the contractor needs to prevent the discharge of turbid waters off the project site.
7. This plan provides reasonable assurance that the proposed construction activities will not result in erosion and sediment deposition in wetlands or off-site, adverse impacts to wetlands, off-site flooding or violation of water quality standards.

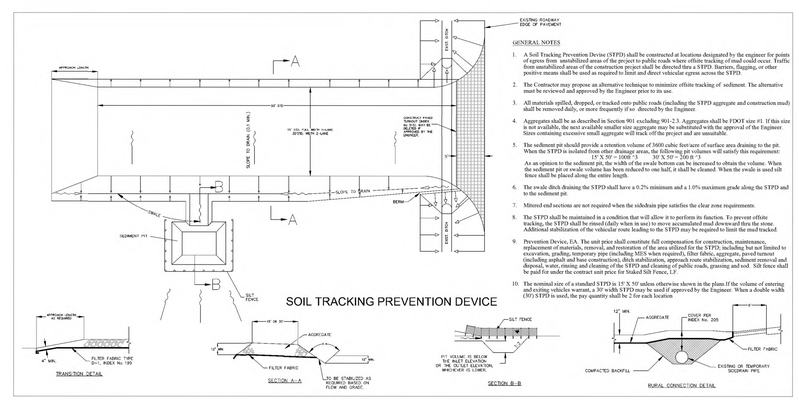

SOIL TRACKING PREVENTION DEVICE

Project Information:

1. This plan is intended for use in conjunction with the Major Site Plan for this project.
2. The construction activities on this site consist of and will be performed in the following order: clearing and grubbing, excavation of the proposed roadway and drainage, construct improvements.
3. The estimated project area is 22.31 acres. The area to be disturbed by construction is 22.31 acres.
4. The topography of the area is gently sloping to sloping and naturally delineates the drainage basins as shown on the Predevelopment Plan and Drainage Plan. Existing soils are 100% Candler Sand, a type "A" hydrologic soil, which is well-drained to excessively drained sand according to the National Resource Conservation Service (NRCS) classification.

Stabilization Schedule:
(Required to be completed by Contractor)

Major Construction Activities:
Start Date
End Date_____

Cease Construction Activities:
Temporary Dates_____
_____
_____

Permanent Date_____

Date that Stabilization Measures were Initiated:_____

Note: Install erosion control features prior to any construction activities on this site.

Permittee's Certification:

The undersigned ensures that the surface water and stormwater management measures proposed in the plan will be effectively implemented until completion of the project or until the permanent surface water management system is operational.

_____ _____
Signature Date

_____
Print Name

Contractor's Certification:

"I certify under penalty of law that I understand, and shall comply with, the terms and conditions of the State of Florida Generic Permit for Stormwater Discharge from Large and Small Construction Activities and this Stormwater Pollution Prevention Plan prepared thereunder."

_____ _____
Signature Date

_____
Print Name

_____
Address

_____
Phone Number

INFORMATION FOR ELECTRONICALLY SIGNED AND SEALED DOCUMENTS

IF THIS ITEM HAS BEEN ELECTRONICALLY SIGNED AND SEALED IT USES A SHA-1 AUTHENTICATION CODE. PRINTED COPIES OF THIS DOCUMENT ARE NOT CONSIDERED SIGNED AND SEALED AND THE SHA-1 AUTHENTICATION CODE MUST BE VERIFIED ON ANY ELECTRONIC COPIES.

NOTWITHSTANDING, PRINTED COPIES ARE VALID IF PHYSICALLY SIGNED, DATED AND SEALED WITH THE ENGINEER'S EMBOSSED SEAL.

Date:	By:	Revisions:
3/27/23	BIL	REVISED PER CIT OF DELAND COMMENTS.

Designed: MWR
Drawn: BIL
Checked: MWR
Scale: 1" = 60'
Project: 2022-04
Date: 10-14-2022
File: Meadowlea Village Ph. 4-7.dwg

MICHAEL W. RADCLIFFE ENGINEERING, INC.
2911 S.E. Lake Weir Avenue Ocala, FL 34471 (352) 629-5500 FAX (352) 629-8010
Certificate No. EB-0006198 • Michael W. Radcliffe P.E. #31170 • Christopher A. Gwin P.E. #68568
www.radcliffeengineering.com

COPYRIGHT © 2023 Michael W. Radcliffe Engineering, Inc. All Rights Reserved

Project Name: Meadowlea Village Ph. 4&5
Sheet Name: Drainage Plan

Sheet No. C021 of C021

X:\MWRE Projects\Meadowlea MHP\2022-04 Meadowlea Village Ph. 4-7\Dwgs\CAD\Meadowlea Village Ph. 4-7.dwg 3/28/2023 3:25 PM

Notes:
1.All tracer wire shall be 10 gauge. Directional bores require to have two 10 gauge wires that are pulled with directional drill. Open cut may use only one 10 gauge wire. Wire length must have enough slack to be extended a minimum of 18" above grade for use.
2. Mechanical Joint Valve shall be manufactured by Clow, Mueller, Kennedy, or American Flow Control.

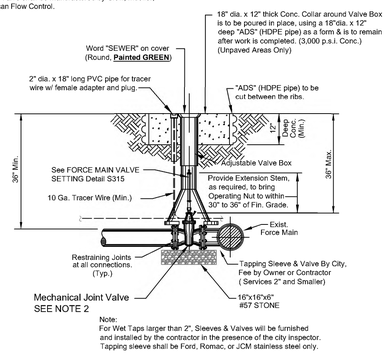

Note:
For Wet Taps larger than 2", Sleeves & Valves will be furnished and installed by the contractor in the presence of the city inspector. Tapping sleeve shall be Ford, Romac, or JCM stainless steel only.

DATE: 11/05/2021 | **FORCE MAIN TAPPING SLEEVE & VALVE** | **S407**

City of DeLand - Standard Details

CITY OF DELAND, FLORIDA
1102 S. GARFIELD AVENUE, DELAND, FLORIDA 32724

DATE: *11/05/2021*
CHECKED BY: *NAME*
SCALE: *NOT TO SCALE*
DRAWN BY: *ERIC SAMPSON*

TITLE: *SANITARY DETAILS*
FILE: *drive letter/details locations*

PAGE 1 OF 5

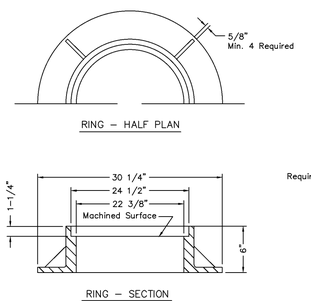

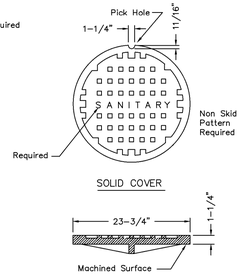

NOTE:
Manufacturers model of storm ring and cover to be approved by City Engineer.

DATE: 11/05/2021 **SANITARY MANHOLE COVER - USF 170-E** **S301**

City of DeLand - Standard Details

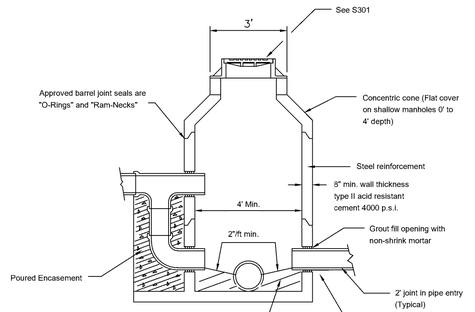

NOTES
1. Precast manhole drop may be approved by City Engineer. Shop drawing submittal required.
2. Drop required when 2' or over.
3. Manholes shall have an interior and exterior coating of at least 15 mils dry thickness PROLO EP214-351 Epoxi-Mastic
4. Polymer concrete manholes are accepted upon review and approval by the City of DeLand Engineering Dept.

SEE S303 FOR PLAN VIEW

DATE: 11/05/2021 **SANITARY MANHOLE** **S302**

City of DeLand - Standard Details

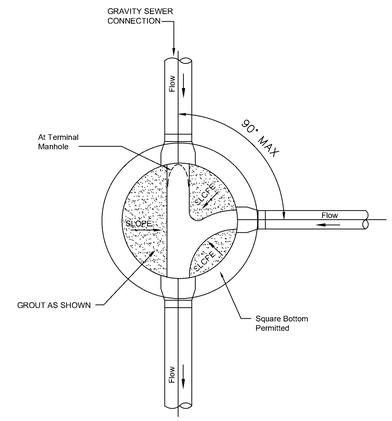

SEE S302 FOR SECTION

DATE: 11/05/2021 **SANITARY MANHOLE** **S303**

City of DeLand - Standard Details

NOTES
1. PRECAST MANHOLE DROP MAY BE APPROVED BY CITY ENGINEER. SHOP DRAWING SUBMITTAL REQUIRED.
2. DROP REQUIRED WHEN 2' OR OVER.
3. MANHOLES SHALL HAVE AN INTERIOR AND EXTERIOR COATING OF AT LEAST 15 MILS DRY THICKNESS PROLO EP214–351 EPOXI–MASTIC OR KOPPERS BITUMASTIC BLACK SOLUTION 300M.

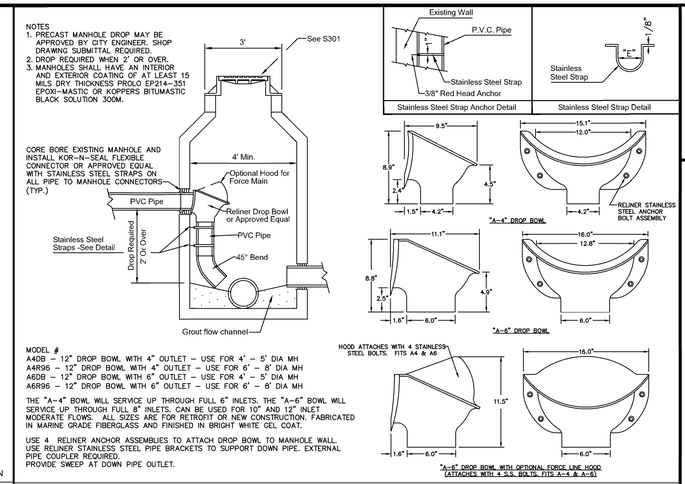

MODEL #
A4DB – 12" DROP BOWL WITH 4" OUTLET – USE FOR 4' – 5' DIA MH
A4R96 – 12" DROP BOWL WITH 4" OUTLET – USE FOR 6' – 8' DIA MH
A6DB – 12" DROP BOWL WITH 6" OUTLET – USE FOR 4' – 5' DIA MH
A6R96 – 12" DROP BOWL WITH 6" OUTLET – USE FOR 6' – 8' DIA MH

THE "A–4" BOWL WILL SERVICE UP THROUGH FULL 6" INLETS. THE "A–6" BOWL WILL SERVICE UP THROUGH FULL 8" INLETS. CAN BE USED FOR 10" AND 12" INLET MODERATE FLOWS. ALL SIZES ARE FOR RETROFIT OR NEW CONSTRUCTION. FABRICATED IN MARINE GRADE FIBERGLASS AND FINISHED IN BRIGHT WHITE GEL COAT.

USE 4 RELINER ANCHOR ASSEMBLIES TO ATTACH DROP BOWL TO MANHOLE WALL. USE RELINER STAINLESS STEEL PIPE BRACKETS TO SUPPORT DOWN PIPE. EXTERNAL PIPE COUPLER REQUIRED.
PROVIDE SWEEP AT DOWN PIPE OUTLET.

DATE: 11/05/2021 **SANITARY MANHOLE - INSIDE DROP FOR GRAVITY & FORCEMAIN** **S304**

City of DeLand - Standard Details

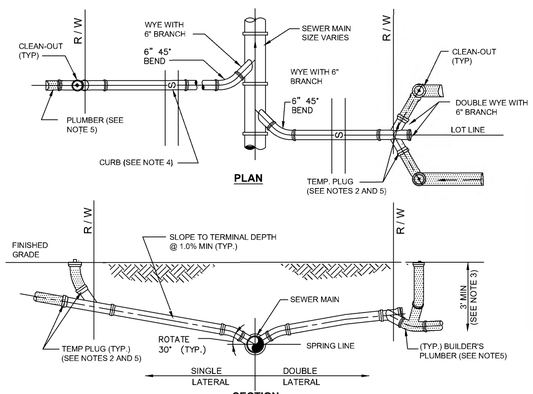

NOTES:
1. INVERT OF SERVICE LATERAL MUST BE ABOVE SPRING LINE.
2. SERVICE LATERAL SHALL BE CAPPED BY THE CONTRACTOR.
3. WYE SHALL BE NO SHALLOWER THAN 3-FEET AND NO DEEPER THAN 5-FEET.
4. CUT OR CAST "S" IN CONCRETE CURB AT SEWER LATERAL LOCATION AND PAINT GREEN.
5. PLUMBER SHALL REMOVE PLUG, INSTALL CLEAN-OUT, AND CONNECT SERVICE LATERAL TO HOUSE.

DATE: 11/05/2021 **SANITARY SERVICE LATERIALS** **S305**

City of DeLand - Standard Details

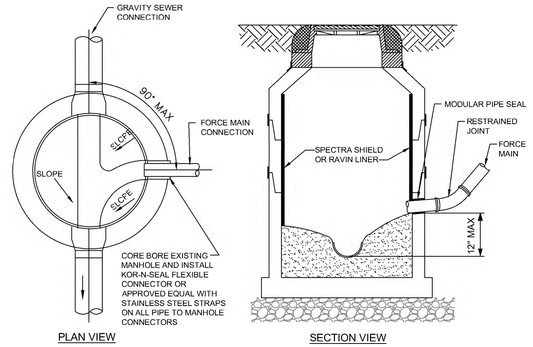

NOTES:
1. FORCE MAIN ORIENTED TO FACILITATE FLOW AND SHALL ENTER MANHOLE WITHIN 1' ABOVE INVERT OF THE EFFLUENT PIPE.
2. BENCH AS REQUIRED FOR NEW FORCE MAIN.
3. MANHOLE RECEIVING FORCE MAIN AND NEXT MANHOLE SHALL BE LINED. EXISTING MANHOLES RECEIVING FORCE MAIN SHALL BE LINED WITH SPECTRA SHIELD OR RAVIN.
4. CONTRACTOR TO COORDINATE THE PRESENCE OF UTILITIES INSPECTOR DURING CORING AND CONNECTIONS TO EXISTING MANHOLES.

DATE: 11/05/2021 **FORCE MAIN TO GRAVITY SEWER CONNECTION** **S306**

City of DeLand - Standard Details

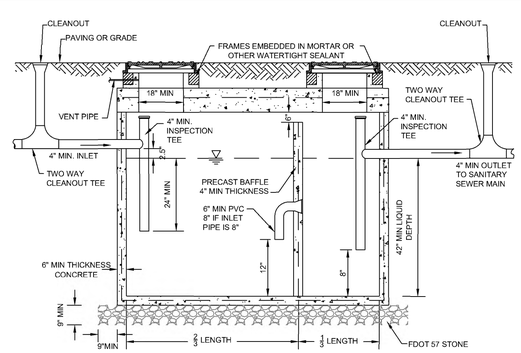

NOTES:
1. SPECIFIC DESIGN DETAILS MUST IN ALL ASPECTS MEET APPLICABLE FLORIDA PLUMBING AND ADMINISTRATIVE CODE.
2. SIZE GREASE INTERCEPTOR - MINIMUM SIZE 750 GAL; MAXIMUM SIZE 1250 GAL.
3. INTERCEPTORS SHALL BE WATER AND GAS TIGHT.
4. ALL FIXTURES LOCATED IN FOOD AND BEVERAGE PREPARATION AREAS SHALL BE ROUTED THOUGH GREASE INTERCEPTOR. RESTROOM WASTE SHALL NOT BE ROUTED THROUGH INTERCEPTOR.
5. BAFFLE REQUIRED; ALTERNATIVE DESIGNS ARE ACCEPTABLE THAT MEET FLORIDA PLUMBING AND ADMINISTRATIVE CODE.
6. LOADS:COVER TO MEET H-20 TRUCK WHEELS WITH 30% IMPACT PER AASHTO. TRAFFIC BEARING FRAME AND COVER TO MEET FDOT STANDARDS AND SHALL BE IMPRINTED WITH THE WORDS "GREASE TRAP".

DATE: 11/05/2021 **GREASE TRAP** **S307**

City of DeLand - Standard Details

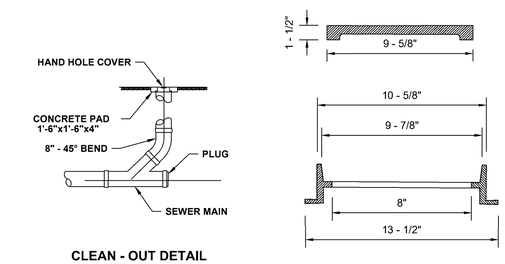

NOTE: HAND HOLE COVER TO BE U.S. FOUNDRY 7621 OR EQUAL

DATE: 11/05/2021 **CLEAN - OUT** **S308**

City of DeLand - Standard Details

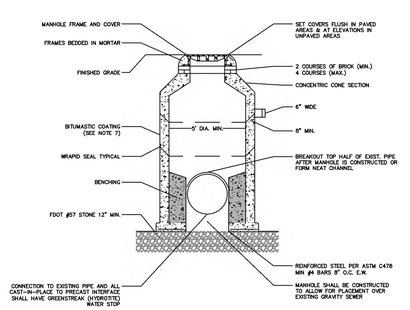

NOTES:
1. DOGHOUSE OPENING MAY ONLY BE USED WHEN PLACING A NEW MANHOLE OVER AN EXISTING LINE; OTHERWISE, THE OPENING MUST BE CAST. SIZE, LOCATION AND ANGLE OF ENTRY SHOULD BE AS REQUIRED BY THE PLANS.
2. OPENINGS IN PRE–CAST UNITS ARE TO BE 4" MINIMUM TO 8" MAXIMUM LARGER THAN THE OUTSIDE DIAMETER OF THE PROPOSED PIPE.
3. MANHOLE COVERS TYPICAL FOR ALL FRAME TYPES.
4. WRAPID SEAL MUST BE USED ON ALL JOINTS, CASTINGS AND RISER RINGS: ON ALL JOINTS ON ROUND AIR RELEASE AND ROUND MANHOLE STRUCTURES.
5. WRAPID SEAL MUST BE USED IN ACCORDANCE WITH MANUFACTURER'S RECOMMENDATIONS.
6. MAX. MANHOLE DEPTH SHALL BE 15' TO LOWEST PIPE INVERT.
7. MANHOLES SHALL HAVE AN INTERIOR AND EXTERIOR COATING OF AT LEAST 15 MILS DRY THICKNESS PROLO EP214–351 EPOXI–MASTIC OR KOPPERS BITUMASTIC BLACK SOLUTION 300M.
8. POLYMER CONCRETE MANHOLES ARE ACCEPTED UPON REVIEW AND APPROVAL BY THE CITY OF DELAND ENGINEERING DEPT.

DATE: 11/05/2021 **DOGHOUSE MANHOLE** **S309**

City of DeLand - Standard Details

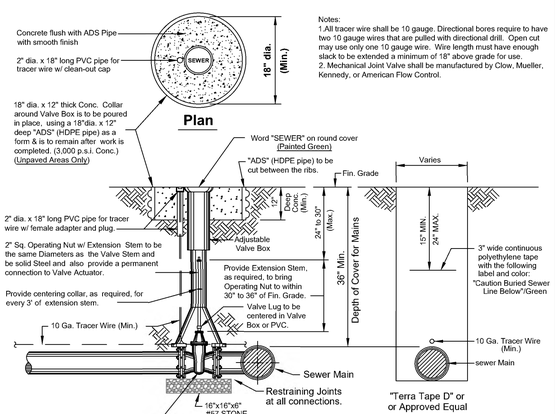

Notes:
1.All tracer wire shall be 10 gauge. Directional bores require to have two 10 gauge wires that are pulled with directional drill. Open cut may use only one 10 gauge wire. Wire length must have enough slack to be extended a minimum of 18" above grade for use.
2. Mechanical Joint Valve shall be manufactured by Clow, Mueller, Kennedy, or American Flow Control.

DATE: 11/05/2021 **FORCE MAIN VALVE SETTING** **S315**

City of Deland - Standard Details

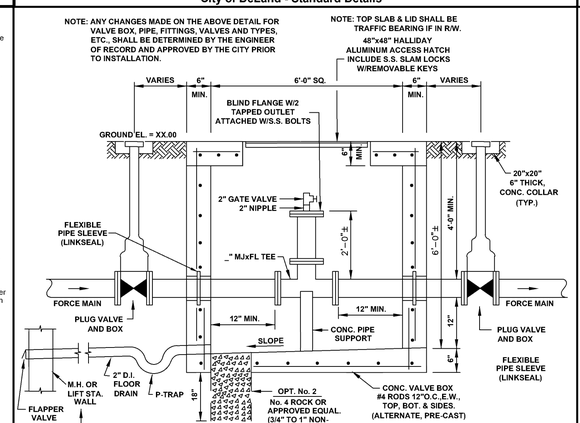

DATE: 11/05/2021 **POLY PIG LAUNCHER** **S310**

City of DeLand - Standard Details

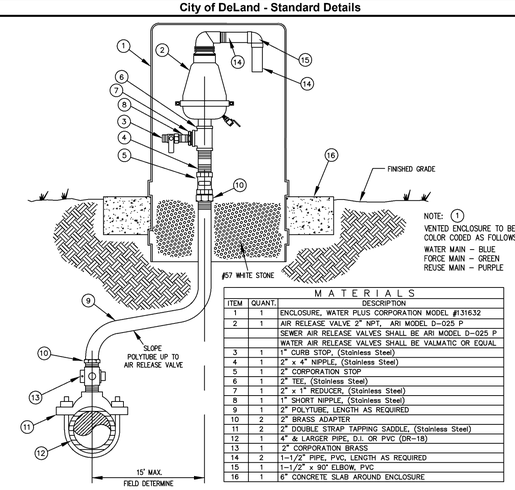

MATERIALS		
ITEM	QUANT.	DESCRIPTION
1	1	ENCLOSURE, WATER PLUS CORPORATION MODEL #131632
2	1	AIR RELEASE VALVE 2" NPT, ARI MODEL D–025 P SEWER AIR RELEASE VALVES SHALL BE ARI MODEL D–025 P WATER AIR RELEASE VALVES SHALL BE VALMATIC OR EQUAL
3	1	1" CURB STOP, (Stainless Steel)
4	1	2" x 4" NIPPLE, (Stainless Steel)
5	1	2" CORPORATION STOP
6	1	2" TEE, (Stainless Steel)
7	1	2" x 1" REDUCER, (Stainless Steel)
8	1	1" SHORT NIPPLE, (Stainless Steel)
9	1	2" POLYTUBE, LENGTH AS REQUIRED
10	2	2" BRASS ADAPTER
11	2	2" DOUBLE STRAP TAPPING SADDLE, (Stainless Steel)
12	1	4" & LARGER PIPE, D.I. OR PVC (DR–18)
13	1	2" CORPORATION BRASS
14	2	1–1/2" PIPE, PVC, LENGTH AS REQUIRED
15	1	1–1/2" x 90° ELBOW, PVC
16	1	6" CONCRETE SLAB AROUND ENCLOSURE

DATE: 11/05/2021 **OFFSET AIR RELEASE VALVE** **S311**

City of DeLand - Standard Details

CITY OF DELAND, FLORIDA
1102 S. GARFIELD AVENUE, DELAND, FLORIDA 32724

DATE: 11/05/2021
CHECKED BY: NAME
SCALE: NOT TO SCALE
DRAWN BY: ERIC SAMPSON

TITLE: SANITARY DETAILS

FILE: drive letter/details locations

PAGE 2 OF 5

SPARE PARTS

1. VACUUM PUMP AND FLOAT CHECK VALVE
2. CHECK VALVE
3. CW OR CCW IMPELLER
4. PARKER SOLENOID VALVE (25 PSI)
5. MECHANICAL SEAL
6. SONIC START VACUUM DOME HOUSING
7. SONIC START REPLACEMENT PRIME SENSOR

MOTORS:
THE PUMP MOTORS SHALL BE VERTICAL, SOLID SHAFT, NEMA P-BASE, SQUIRREL-CAGE INDUCTION TYPE, SUITABLE FOR 3 PHASE, 60 CYCLE, 480 VOLT ELECTRIC CURRENT. THEY SHALL HAVE CLASS F INSULATION. INSULATION TEMPERATURE SHALL, HOWEVER, BE LIMITED TO CLASS B. THE MOTORS SHALL HAVE NORMAL STARTING TORQUE AND LOW-STARTING CURRENT, AS SPECIFIED BY NEWMAN DESIGN B CHARACTERISTICS. THEY SHALL BE OPEN DRIP-PROOF DESIGN WITH FORCED AIR CIRCULATION BY INTEGRAL FAN. OPENINGS FOR VENTILATION SHALL BE UNIFORMLY SPACED AROUND THE FRAME. LEADS SHALL BE TERMINATED IN CAST CONNECTION BOX AND SHALL BE CLEARLY IDENTIFIED.
THE MOTORS SHALL HAVE 1.15 SERVICE FACTOR. THE SERVICE FACTOR SHALL BE RESERVED THE OWNER'S PROTECTION. THE MOTORS SHALL NOT BE OVERLOADED BEYOND THEIR NAMEPLATE RATING, AT THE DESIGN CONDITIONS, NOR AT ANY HEAD IN THE OPERATING RANGE AS SPECIFIED UNDER OPERATING CONDITIONS.
THE MOTOR-PUMP SHAFT SHALL BE CENTERED, IN RELATION TO THE MOTOR BASE, WITHIN 0.005".
THE SHAFT RUBOUT SHALL NOT EXCEED 0.003".
THE MOTORS SHAFT SHALL BE EQUAL OR EXCEED THE DIAMETER SPECIFIED UNDER MAIN PUMPS AT ALL POINTS FROM IMMEDIATELY BELOW THE TOP BEARING TO THE TOP OF THE IMPELLER HUB. A BEARING CAP SHALL BE PROVIDED TO HOLD THE BOTTOM MOTOR BEARING IN A FIXED POSITION. BEARING HOUSINGS SHALL BE PROVIDED WITH FITTING FOR LUBRICATION AS WELL AS PURGING OLD LUBRICANT. THE MOTORS SHALL BE FITTED WITH HEAVY LIFTING EYES OR LUGS, EACH CAPABLE OF SUPPORTING THE ENTIRE WEIGHT OF THE PUMP AND MOTOR.

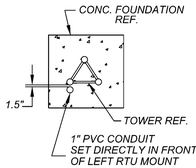

CONDUIT DETAIL

SECTION "A-A"
N.T.S.

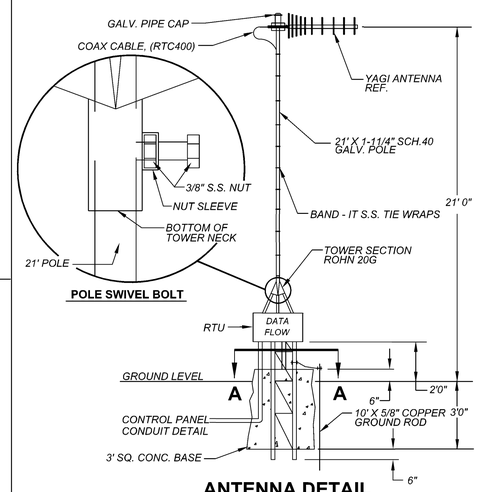

ANTENNA DETAIL
N.T.S.

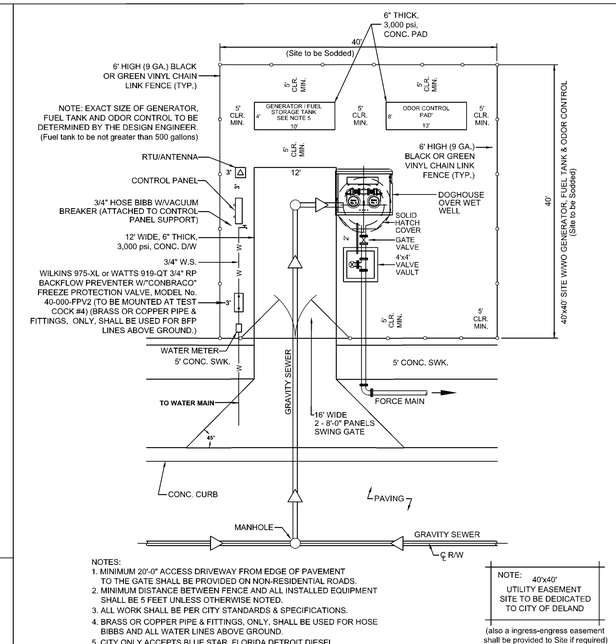

NOTES:
1. MINIMUM 20'-0" ACCESS DRIVEWAY FROM EDGE OF PAVEMENT TO THE GATE SHALL BE PROVIDED ON NON-RESIDENTIAL ROADS.
2. MINIMUM DISTANCE BETWEEN FENCE AND ALL INSTALLED EQUIPMENT SHALL BE 5 FEET UNLESS OTHERWISE NOTED.
3. ALL WORK SHALL BE PER CITY STANDARDS & SPECIFICATIONS.
4. BRASS OR COPPER PIPE & FITTINGS, ONLY, SHALL BE USED FOR HOSE BIBBS AND ALL WATER LINES ABOVE GROUND.
5. CITY ONLY ACCEPTS BLUE STAR, FLORIDA DETROIT DIESEL, OR CATERPILLAR GENERATORS.
6. POLYMER CONCRETE WET WELLS ARE ACCEPTED UPON REVIEW AND APPROVAL BY THE CITY OF DELAND ENGINEERING DEPT.

NOTE: 40'x40' UTILITY EASEMENT SITE TO BE DEDICATED TO CITY OF DELAND
(also a ingress-egress easement shall be provided to Site if required)

LIFT STATION SITE PLAN

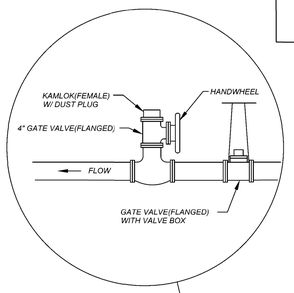

SEE PAGE 2 & 3 FOR CONTROL PANEL RACK AND SET-UP

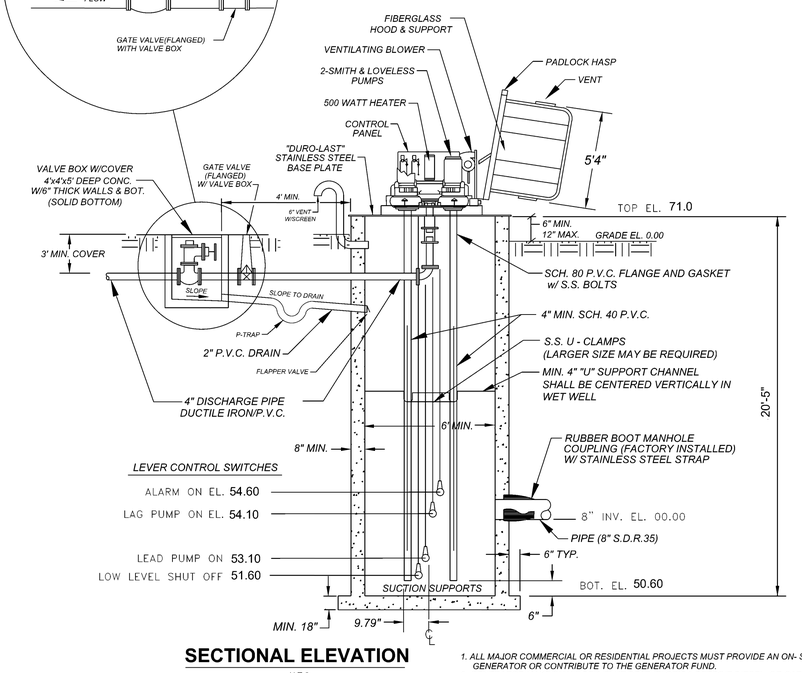

SECTIONAL ELEVATION
N.T.S.

1. ALL MAJOR COMMERCIAL OR RESIDENTIAL PROJECTS MUST PROVIDE AN ON- SITE GENERATOR OR CONTRIBUTE TO THE GENERATOR FUND.
2. GENERATOR MAKE SHALL BE A BLUE STAR, FLORIDA DETROIT DIESEL, OR CATERPILLAR.
3. DIESEL FUEL TANK WITH THREE DAY RUN TIME MIN. (500 Gallon Maximum Storage)
4. AUTOMATIC TRANSFER SWITCH SHALL BE REQUIRED.
5. GENERATOR SHALL BE CONNECTED TO THE REMOTE TELEMETRY UNIT FOR MONITORING.
6. NEW SUBDIVISIONS OF 80 HOMES OR MORE WILL BE REQUIRED TO PROVIDE A UNIT W/ GENERATOR. (LESS THAN 80 HOMES WILL PAY A PRO RATA SHARE $450 PER UNIT)
7. POLYMER CONCRETE WET WELLS ARE ACCEPTED UPON REVIEW AND APPROVAL BY THE CITY OF DELAND ENGINEERING DEPT.

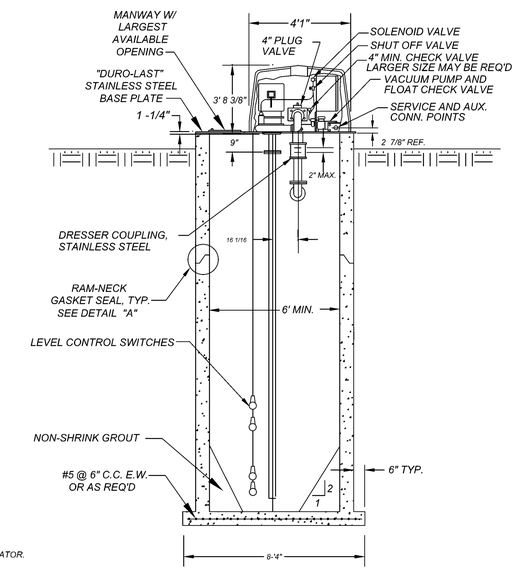

CROSS SECTION
N.T.S.

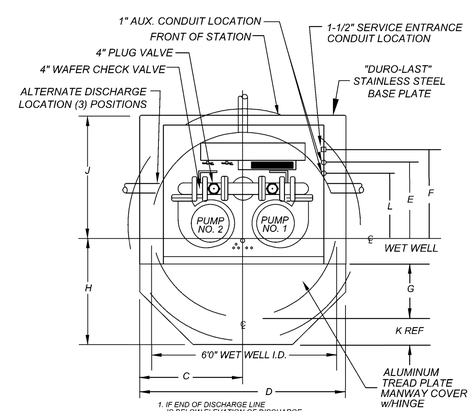

1. IF END OF DISCHARGE LINE IS BELOW ELEVATION OF DISCHARGE LINE @ POINT OF LEAVING WET WELL a PRIMING LOCK LOOP MAY BE REQ.'D. (CONSULT FACTORY)
2. IF DISCHARGE LINE IS LESS THAN 200' IN LENGTH AN ADDITIONAL CHECK VALVE OR PRIMING LOCK LOOP MAY BE REQ.'D. (CONSULT FACTORY)
3. PROVIDE 60" SLOPE IN WET WELL, AS REQ'D.
4. VOLUME IN GALLONS BETWEEN L.L. ON AND L.L. OFF SHOULD BE EQUAL OR GREATER THAN THE PUMPING RATE IN G.P.M.
5. MAXIMUM CAPACITY - 400 G.P.M.

PLAN VIEW
N.T.S.

MACH. CHAMBER (SHOWN LESS HOOD)

GENERAL SITE PLAN NOTES:

1. BACKFLOW PREVENTER SHALL BE, WILKINS 3/4" 975-XL RP or WATTS 3/4" 919-QT RP , W/ "CONBRACO" FREEZE PROTECTION VALVE, MODEL No. 40-000-FPV2, TO BE MOUNTED AT TEST COCK #4.
2. ALL 3/4" HOSE BIBBS SHALL ALSO HAVE A VACUUM BREAKER.
3. LIFT STATION SITE SHALL BE SODDED.
4. PRIOR TO ACCEPTANCE OF THIS LIFT STATION, CITY STAFF WILL OBSERVE THAT THIS STATION WILL PUMP DOWN TO THE CITY'S SPECIFIED CUT-OFF LEVEL UNDER THE CONDITIONS OF A FULL DISCHARGE PRESSURE SEWER, BEING PRESSURIZED W/ ALL OTHER PUMP STATIONS OPERATING, IF THERE EXISTS A MANIFOLD CONDITION. THE DEVELOPER WILL SUPPLY LABOR AND MATERIALS FOR THIS DEMONSTRATION.
5. DO NOT PLACE TRANSFORMERS OR OTHER APPURTENANCES WITHIN THE DESIGNATED EASEMENT THAT WILL IMPEDE MAINTENANCE ACTIVITIES OF THIS STATION.
6. ORIENTATE THE MANWAY TOWARD THE STREET SIDE FOR EASY ACCESS BY OPERATING & MAINTENANCE PERSONNEL.
7. PROVIDE ADEQUATE PAVING (CONC. OR ASPHALT) 12' WIDE DRIVE FROM STREET TO PUMP STATION FOR SAFE ACCESS OF EMERGENCY GENERATOR, SEWER CLEANER, AND OTHER MAINTENANCE VEHICLES.
8. FENCE WITH 6' HIGH COMMERCIAL GRADE CYCLONE FENCE, USING TWO 8 FOOT GATES . FENCE SHOULD BE LOCATED IN SUCH A WAY AS NOT TO INTERFERE WITH ANY PANEL DOORS OR HATCH OPENINGS, AND GATE POSITIONED TO ALLOW EASY ACCESS TO WET WELL. (BLACK OR GREEN VINYL COATED), (REFER TO SITE PLAN)
9. A 40' x 40' TRACT SHALL BE DEDICATED TO THE CITY OF DELAND FOR THE LIFT STATION SITE.
10. PROVIDE "DURO-LAST" STAINLESS STEEL BASE PLATE ON LIFT STATION.
11. BRASS OR COPPER PIPE & FITTINGS, ONLY, SHALL BE USED FOR BFP & HOSE BIBBS AND LINES ABOVE GROUND.
12. ALL SEWER AIR RELEASE VALVES SHALL BE 2" A.R.I. MODEL D-025TPO2.
13. MIN. 2'x2' AROUND AND 6' CLEARANCE ABOVE METER

CONTROLS:
THE CONTROL EQUIPMENT SHALL BE MOUNTED IN A NEMA TYPE 1 STEEL ENCLOUSURE WITH A REMOVABLE ACCESS COVER. THE CIRCUIT BREAKERS, STARTER RESET BUTTONS, AND CONTROL SWITCHES SHALL BE OPERABLE WITHOUT REMOVING THE ACCESS COVER, FOR DEADFRONT OPERATION.
A GFCI TYPE CONVENIENCE OUTLET SHALL BE PROVIDED ON THE SIDE OF THE CABINET FOR OPERATION OF 120 VOLT AC DEVICES. THERMAL MAGNETIC AIR CIRCUIT BREAKERS SHALL BE PROVIDED FOR BRANCH DISCONNECT SERVICE AND SHORT CIRCUIT PROTECTION OF ALL MOTOR CONTROL AND AUXILIARY CIRCUITS.
MAGNETIC ACROSS-THE-LINE STARTERS WITH UNDER-VOLTAGE RELEASE AND OVERLOAD COILS FOR EACH PHASE SHALL BE PROVIDED FOR EACH PUMP MOTOR TO GIVE POSITIVE PROTECTION. EACH SINGLE-PHASE AUXILIARY MOTOR SHALL BE EQUIPPED WITH AN OVER-CURRENT PROTECTION DEVICE IN ADDITION TO THE BRANCH CIRCUIT BREAKER, OR SHALL BE IMPEDANCE PROTECTED. ALL SWITCHES SHALL BE LABELED AND A CODED WIRING DIAGRAM SHALL BE PROVIDED.
TO CONTROL THE OPERATION OF THE PUMPS WITH VARIATIONS OF LIQUID LEVEL IN THE WET WELL, A MINIMUM OF FOUR (4) DISPLACEMENT SWITCHES SHALL BE PROVIDED. A 30' CORD SHALL BE PROVIDED WITH EACH SWITCH. THE CORD SHALL HAVE A CORROSION-RESISTANT VINYL JACKET AND BE MULTI-STRANDED IN ORDER TO PREVENT FATIGUE.
AN AUTOMATIC ALTERNATOR WITH MANUAL SWITCH SHALL BE PROVIDED TO CHANGE THE SEQUENCE OF OPERATION OF THE PUMPS EVERY EIGHT HOURS. ALTERNATING THE PUMPS AT LESS THAN EIGHT HOUR INTERVALS WILL NOT BE ACCEPTABLE. PROVISIONS SHALL ALSO BE MADE FOR THE PUMPS TO OPERATE IN PARALLEL SHOULD THE LEVEL IN THE WET WELL CONTINUE TO RISE ABOVE THE STARTING LEVEL FOR THE LAG PUMP.

WET WELL DIA.	DIM "A"	DIM "B"	DIM "C"	DIM "D"	DIM "E"	DIM "F"	DIM "G"	DIM "H"	DIM "J"	DIM "K"	DIM "L"
6'- 0"	2"	1'-1 13/16"	3'-4"	6'-8"	2'-1 3/8"	2'-5 7/8"	1'-8"	3'-10"	3'-5 1/2"	10"	1'-8 7/8"

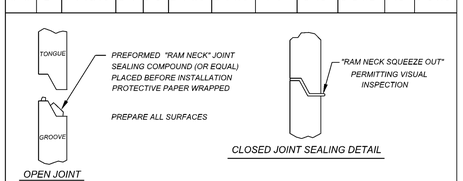

DETAIL "A"
N.T.S.

Note:
Air release valves shall be provided at all high points on force main.

Wet Well (Anti-Floation)

Displacement = XX,XXX lbs. Up
Structure = XX,XXX lbs. Down

Valve Vault (Anti-Floation)

Displacement = X,XXX lbs. Up
Structure = X,XXX lbs. Down

Index No.
30800

REVISED 5/31/07
REVISED 8/6/08
REVISED 10/12/09
REVISED 4/8/10
REVISED 8/1/13
REVISED 9/2/14
REVISED 5/15/17
REVISED 7/24/18
REVISED 11/05/21

SHEET 1 OF 3

City of DeLand, Engineering Services
1102 S. Garfield Avenue, DeLand, Florida 32724

DATE: 11/05/2021
CHECKED BY:
SCALE: NOT TO SCALE
DRAWN BY: ERIC SAMPSON

TITLE: SANITARY LIFT STATION

FILE: LIFTSTATION.dwg

DETAIL "A"

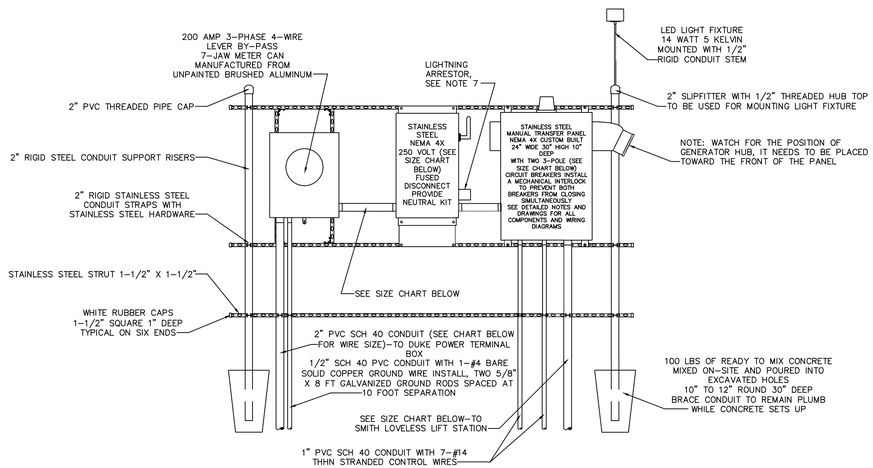

240 VOLT POWER RACK WITHOUT GENERATOR

DETAIL "B"

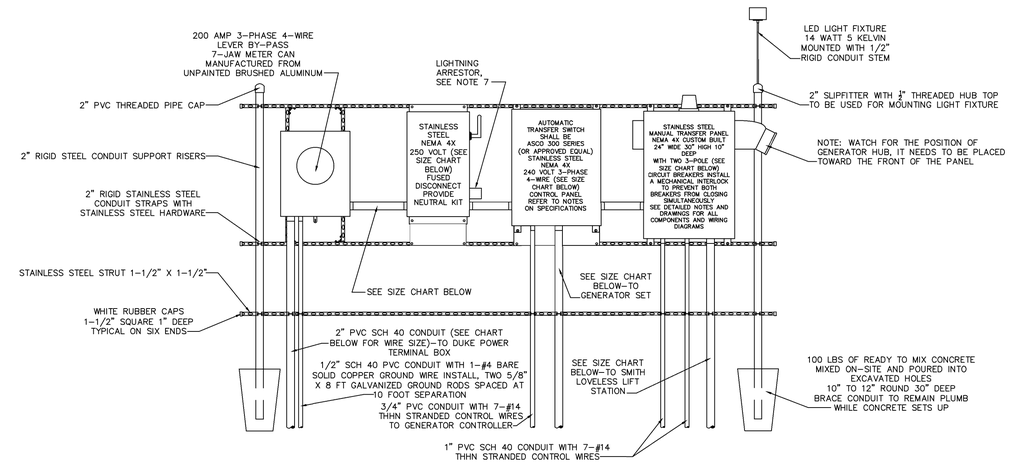

240 VOLT POWER RACK WITH GENERATOR AUTOMATIC TRANSFER SWITCH

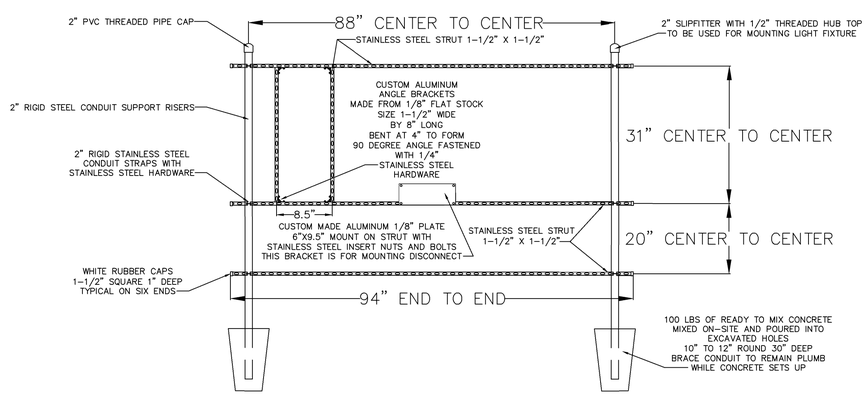

RACK FRAMING DETAILS
240 VOLT WITHOUT AUTOMATIC TRANSFER SWITCH

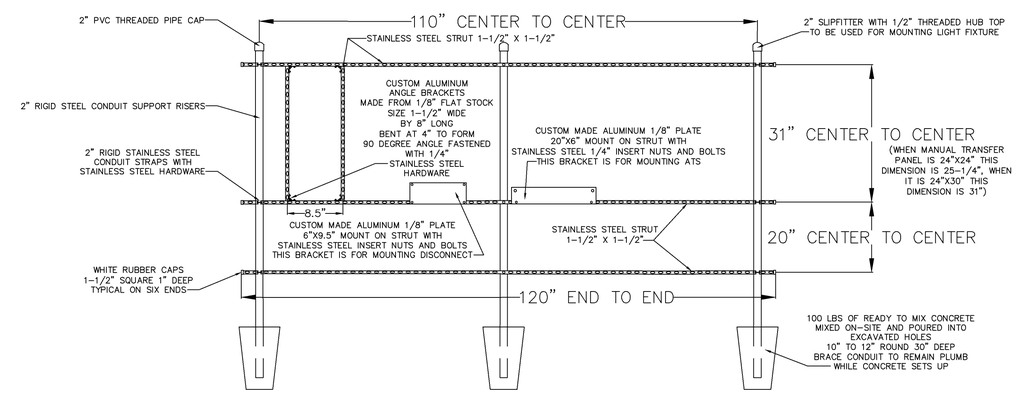

RACK FRAMING DETAILS
240 VOLT WITH AUTOMATIC TRANSFER SWITCH

CONTROL GENERATOR RECEPTACLE PANEL

1. ENCLOSURE : NEMA 4X STAINLESS, 304 GRADE, 14 GAUGE, GASKETED, #4 BRUSHED FINISH, U.L. AND CSA APPROVED, HASP AND STAPLE FOR PADLOCKING, INSIDE PRINT POCKET, STAINLESS STEEL HINGE. MIN. SIZE 24"x 24"x 8" FOR UP TO 15 H.P.
2. MAIN BREAKER : SQUARE D HEAVY DUTY SIZED PROPERLY FOR FULL LOAD OF STATION PLUS 25%.
3. EMERGENCY BKR.: SQUARE D HEAVY DUTY SIZED PROPERLY FOR FULL LOAD OF STATION PLUS 25%.
4. MECH. INTERLOCK: ALL ALUMINUM AND STAINLESS STEEL W/POSITIVE MEANS OF LOCKING OFF BREAKER NOT IN USE. THE BREAKERS WILL PROTRUDE THROUGH INNER DOOR.
5. RECEPTACLE: RUSSELL STOLL JRS1044FR (230 VOLT ONLY), MELTRIC PART #37-98047 (480 VOLT ONLY)
6. ANGLE ADAPTER: RUSSELL STOLL JAAB-10, 20 DEG. ADAPTER
7. LIGHTNING ARRESTOR: HEAVY DUTY, SQUARE D P/N SDSA3650
8. PHASE MONITOR: DIVERSIFIED P/N SLA-230-ASA, 8 PIN WITH N.O. AND N.C. CONTACTS WIRE TO TERMINAL FOR RTU EQUIPMENT.
9. HIGH WATER ALARM: RED, LEXAN, W/NO EXTERNAL SCREWS.
10. HWA RELAY: SQUARE D OR OMRON, 8 PIN DOUBLE POLE, DOUBLE THROW WIRED TO RTU TERMINAL.
11. ALARM HORN: RED, WHEELOCK P/N 31T-115 MOUNTED TO RED WEATHER PROOF CAST BOX ON EXTERIOR OF ENCLOSURE.
12. ALARM RELAY: SQUARE D OR OMRON, 8 PIN DOUBLE POLE, DOUBLE THROW WIRED TO RTU TERMINAL.
13. ALARM RESET/SIL: SQUARE D, WEATHER PROOF MOUNTED ON EXTERIOR OF ENCLOSURE.
14. ENCL. BACKPLATE: ALUMINUM, 12 GAUGE
15. TERMINAL STRIP: BUCHANON P/N 0625
16. GROUND LUG: BUCHANON P/N 824
17. NEUTRAL LUG: BUCHANON P/N 824
18. MAIN LOAD LUG: SQUARE D P/N U3
19. LABELS: ALL BREAKERS AND SWITCHES TO BE IDENTIFIED BY PERMANENTLY ATTACHED LABEL TO PANEL DOOR INTERIOR
20. MOUNTING SCREWS: STAINLESS STEEL 304
21. SCHEMATIC DWG.: PROTECTED BY PLASTIC COATING AND ATTACHED TO PANEL DOOR INTERIOR.
22. MANUFACTURER: STACON, ECS OR CITY OF DELAND APPROVAL.
23. R.T.U.: (DATA FLOW MELBOURNE FLA. (R.T.U. 204) OR EQUAL TO BE INSTALLED BY CITY- DEVELOPER TO BEAR ALL COSTS.
24. PROVIDE SPARE PARTS - SEE SPARE PARTS LIST
25. WET WELL TO BE COATED INSIDE AND OUT WITH MIN. 24 MILS OF COAL/TAR EPOXY
26. EQUIVALENT PRODUCTS CAN ONLY BE APPROVED UPON RECEIPT OF WRITTEN AUTHORIZATION FROM THE CITY OF DELAND.

SIZE CHART

STEP #1: DETERMINE LIFT STATION SIZE & SPECIFICATIONS FROM THE UTILITY CONTRACTOR OR CITY OF DELAND ENGINEERING DEPT.

STEP #2: MAKE NOTE OF THE FOLLOWING: THE VOLTAGE FOR THE STATION, THE NUMBER OF PUMPS (2 OR 3) & THE HORSEPOWER OF PUMPS.

STEP #3: REFER TO THE ELECTRICAL SERVICE DATA CHARTS FOR THE STANDARD 2 PUMP OR 3 PUMP STATION (FOUND ON SHEET 3 OF 3).

STEP #4: USE THE VOLTAGE COLUMN AND THE HORSEPOWER ROW TO FIND THE TOTAL STATION FULL LOAD AMPS.

STEP #5: UPON DETERMINING THE FULL LOAD AMPS OF THE STATION, THE SERVICE ENTRANCE SIZE SHALL NOT BE SMALLER THAN 100 AMPS. STATIONS THAT REQUIRE A SERVICE SIZE LARGER THAN 100 AMPS SHALL BE SIZED CLOSEST TO THE STANDARD SIZES LISTED BELOW.

SERVICE SIZE	CONDUIT SIZE	WIRE SIZE	BREAKER OR FUSE RATING
100 AMP	1-1/2"	#3 THHN CU	100 AMP
125 AMP	1-1/2"	#2 THHN CU	125 AMP
150 AMP	2"	#1 THHN CU	150 AMP
200 AMP	2"	3/0 THHN CU	200 AMP
225 AMP	2-1/2"	4/0 THHN CU	225 AMP

Index No.
30800
REVISED 11/05/21
SHEET 2 OF 3

City of DeLand, Engineering Services
1102 S. Garfield Avenue, DeLand, Florida 32724

DATE: *11/05/2021*
CHECKED BY:
SCALE: *NOT TO SCALE*
DRAWN BY: *ERIC SAMPSON*

TITLE: *SANITARY LIFT STATION*

FILE: *LIFT_STATION_DETAILS_A_B.dwg*

DETAIL "C"

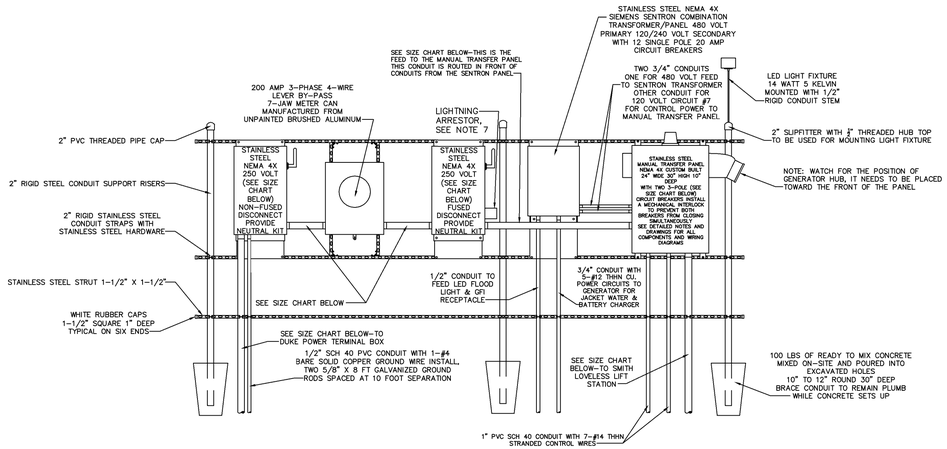

480 VOLT POWER RACK WITHOUT GENERATOR AUTOMATIC TRANSFER SWITCH

DETAIL "D"

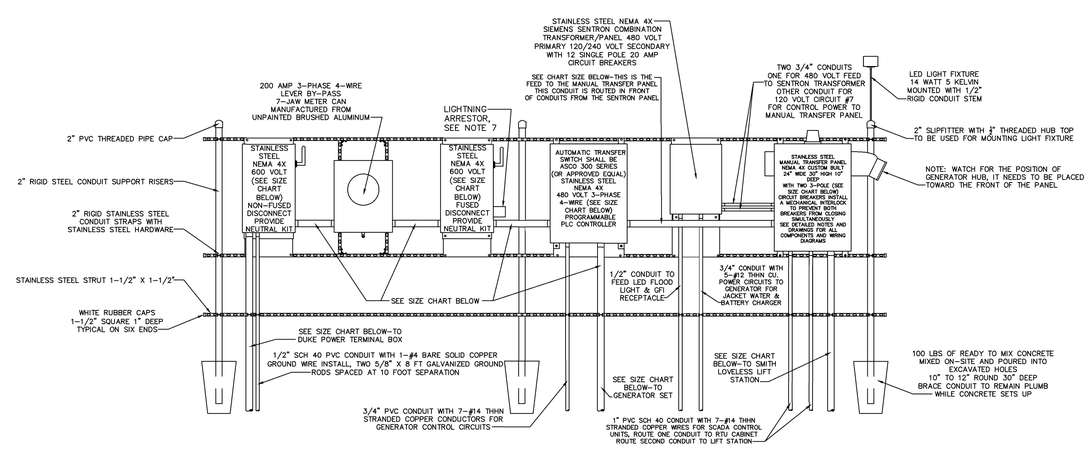

480 VOLT POWER RACK WITH GENERATOR WITH AUTOMATIC TRANSFER SWITCH

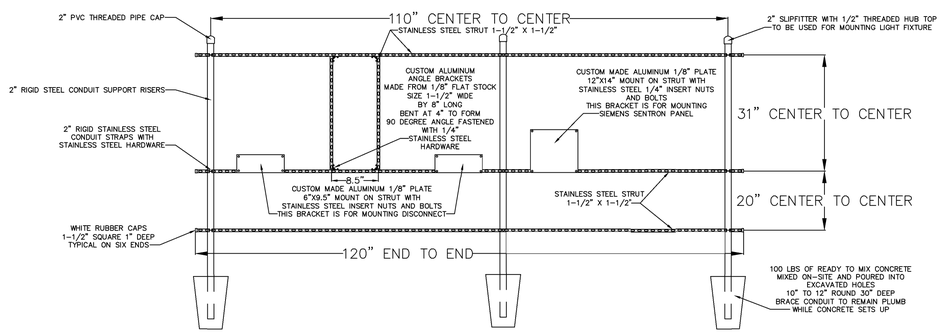

RACK FRAMING DETAILS 480 VOLT WITHOUT AUTOMATIC TRANSFER SWITCH

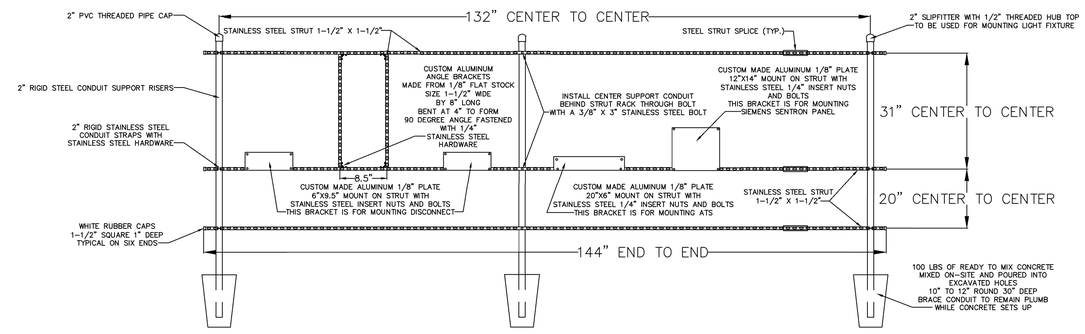

RACK FRAMING DETAILS 480 VOLT WITH AUTOMATIC TRANSFER SWITCH

CONTROL GENERATOR RECEPTACLE PANEL

1. ENCLOSURE ; NEMA 4X STAINLESS, 304 GRADE, 14 GAUGE, GASKETED, #4 BRUSHED FINISH, U.L. AND CSA APPROVED, HASP AND STAPLE FOR PADLOCKING, INSIDE PRINT POCKET, STAINLESS STEEL HINGE. MIN. SIZE 24" x 24"x 8" FOR UP TO 15 H.P.
2. MAIN BREAKER : SQUARE D HEAVY DUTY SIZED PROPERLY FOR FULL LOAD OF STATION PLUS 25%.
3. EMERGENCY BKR.: SQUARE D HEAVY DUTY SIZED PROPERLY FOR FULL LOAD OF STATION PLUS 25%.
4. MECH. INTERLOCK: ALL ALUMINUM AND STAINLESS STEEL W/POSITIVE MEANS OF LOCKING OFF BREAKER NOT IN USE. THE BREAKERS WILL PROTRUDE THROUGH INNER DOOR.
5. RECEPTACLE: RUSSELL STOLL JRS1044FR (230 VOLT ONLY), MELTRIC PART #37-98047 (480 VOLT ONLY)
6. ANGLE ADAPTER: RUSSELL STOLL JAAB-10, 20 DEG. ADAPTER
7. LIGHTNING ARRESTOR: HEAVY DUTY, SQUARE D F/N SDASA3650, OR INTERMATIC AG503C 600V.
8. PHASE MONITOR: DIVERSIFIED F/N SLA-230-ASA, 8 PIN WITH N.O. AND N.C. CONTACTS WIRE TO TERMINAL FOR RTU EQUIPMENT.
9. HIGH WATER ALARM: RED, LEXAN, W-/NO EXTERNAL SCREWS.
10. HWA RELAY: SQUARE D OR OMRON, 8 PIN DOUBLE POLE, DOUBLE THROW WIRED TO RTU TERMINAL.
11. ALARM HORN: RED, WHEELOCK F/N 31T-115 MOUNTED TO RED WEATHER PROOF CAST BOX ON EXTERIOR OF ENCLOSURE.
12. ALARM RELAY: SQUARE D OR OMRON, 8 PIN DOUBLE POLE, DOUBLE THROW WIRED TO RTU TERMINAL.
13. ALARM RESET/SIL: SQUARE D, WEATHER PROOF MOUNTED ON EXTERIOR OF ENCLOSURE.
14. ENCL. BACKPLATE: ALUMINUM, 12 GAUGE
15. TERMINAL STRIP: BUCHANON F/N 0625
16. GROUND LUG: BUCHANON F/N 824
17. NEUTRAL LUG: BUCHANON F/N 824
18. MAIN LOAD LUG: SQUARE D F/N U3
19. LABELS: ALL BREAKERS AND SWITCHES TO BE IDENTIFIED BY PERMANENTLY ATTACHED LABEL TO PANEL DOOR INTERIOR
20. MOUNTING SCREWS: STAINLESS STEEL 304
21. SCHEMATIC DWG.: PROTECTED BY PLASTIC COATING AND ATTACHED TO PANEL DOOR INTERIOR.
22. MANUFACTURER: STACON, ECS OR CITY OF DELAND APPROVAL.
23. R.T.U.: (DATA FLOW MELBOURNE F.L.A. (R.T.U. 204) OR EQUAL TO BE INSTALLED BY CITY- DEVELOPER TO BEAR ALL COSTS.
24. PROVIDE SFARE PARTS - SEE SPARE PARTS LIST
25. WET WELL TO BE COATED INSIDE AND OUT WITH MIN. 24 MILS OF COAL/TAR EPOXY
26. EQUIVALENT PRODUCTS CAN ONLY BE APPROVED UPON RECEIPT OF WRITTEN AUTHORIZATION FROM THE CITY OF DELAND.

ELECTRICAL SERVICE DATA STANDARD 2-PUMP WET WELL MOUNTED PUMP STATION

MAIN PUMP MOTOR SIZE	TOTAL STATION FULL LOAD AMPS		
RATED HP EACH	208 VOLT	230 VOLT	460 VOLT
1	17.6	15.3	7.6
1–1/2	21.8	18.9	9.5
2	25.9	22.5	11.3
3	33.1	28.8	14.5
5	47.7	41.4	20.7
7–1/2	65.3	56.7	28.4
10	80.8	70.2	35.1
15	117.0	101.7	50.9
20	148.1	128.7	64.4
25	190.44	160.2	80.1
30	215.3	187.2	93.6
40	---	---	120.6
50	---	---	150.0

ELECTRICAL SERVICE DATA STANDARD 3-PUMP WET WELL MOUNTED PUMP STATION

MAIN PUMP MOTOR SIZE	TOTAL STATION FULL LOAD AMPS		
RATED HP EACH	208 VOLT	230 VOLT	460 VOLT
1	27.3	23.7	11.9
1–1/2	33.3	28.9	14.5
2	39.3	34.1	17.1
3	49.6	43.2	21.6
5	70.6	61.4	30.7
7–1/2	96.1	83.5	41.8
10	118.5	103.0	51.5
15	170.9	148.5	74.3
20	215.7	187.5	93.8
25	---	---	116.5
30	---	---	136.0
40	---	---	175.0
50	---	---	217.3

Index No.
30800
REVISED 11/05/21
SHEET 3 OF 3

City of DeLand, Engineering Services
1102 S. Garfield Avenue, DeLand, Florida 32724

DATE: *11/05/2021*
CHECKED BY:
SCALE: *NOT TO SCALE*
DRAWN BY: *ERIC SAMPSON*

TITLE: *SANITARY LIFT STATION*

FILE: *LIFT_STATION_DETAILS_C_D.dwg*

GRAPHIC SCALE

100 0 50 100 200 400

(IN FEET)
1 inch = 100 ft.

Meadowlea Village
A COVE COMMUNITY

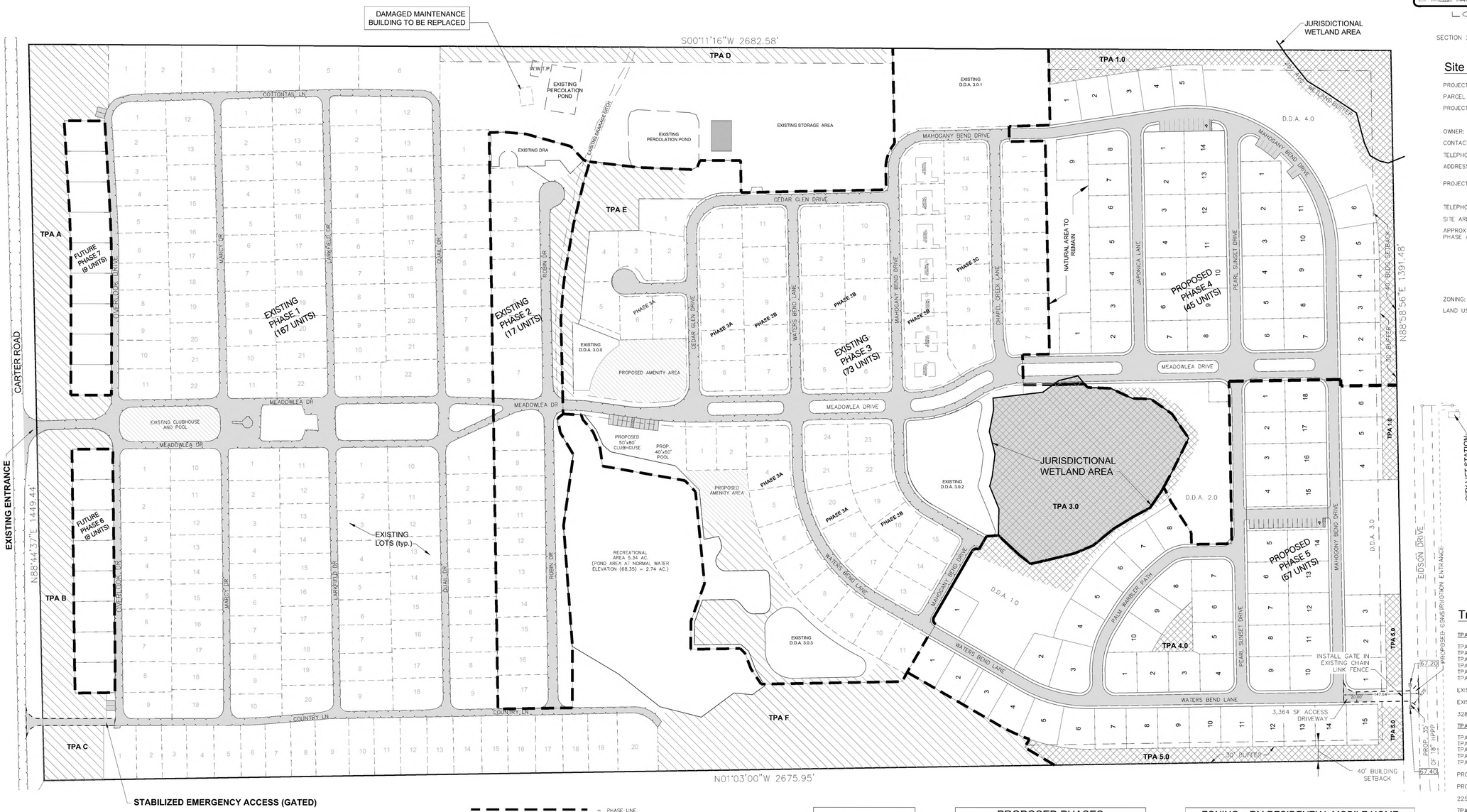

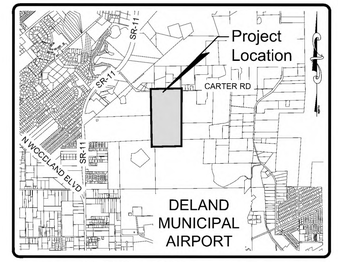

LOCATION MAP
SCALE: 1" = 4000'
DELAND, FLORIDA
SECTION 27, TOWNSHIP 16 SOUTH, RANGE 30 EAST

Site Information:

PROJECT NAME:	MEADOWLEA VILLAGE MASTER PLAN
PARCEL NUMBER:	6027-00-00-0110
PROJECT LOCATION:	1004 OVERLOOK DRIVE DELAND FLORIDA 32724 PH. (904)736-1853
OWNER:	MEADOWLEA VENTURE I LLC
CONTACT:	GARY TIMMONS
TELEPHONE:	(443) 497-7001
ADDRESS:	1901 SE 58TH AVE OCALA FL 34480
PROJECT ENGINEER:	MICHAEL W RADCLIFFE ENGINEERING INC. 2611 SE LAKE WEIR AVE. OCALA, FLORIDA 34471
TELEPHONE:	(352) 629-5500
SITE AREA:	3,812,910 SF (87.53 ACS)
APPROX ACREAGE PER PHASE AS FOLLOWS:	PHASE 1 = 1,682,152 SF (36.62 AC) PHASE 2 = 166,445 SF (3.82 AC) PHASE 3 = 911,014 SF (20.91 AC) PHASE 4 = 489,315 SF (11.23 AC) PHASE 5 = 482,455 SF (11.07 AC) PHASE 6 = 38,352 SF (0.88 AC) PHASE 7 = 43,198 SF (0.99 AC) TOTAL = 3,812,910 SF (87.53 AC)
ZONING:	RM (RESIDENTIAL MOBILE HOME PARK)
LAND USE:	MEDIUM DENSITY RESIDENTIAL

Notes:

1. THIS PROPERTY WAS ANNEXED INTO THE CITY OF DELAND ON 11/2/2020 WITH 257 EXISTING HOME SPACES.
2. MEADOWLEA VILLAGE IS A RENTAL MANUFACTURED HOME COMMUNITY WITH ALL LAND UNDER SINGLE OWNERSHIP.
3. WATER/SEWER FOR EXISTING PHASES 1-3 IS PROVIDED BY MEADOWLEA VILLAGE.

Parking Requirements:

RESIDENTIAL PARKING: 2 SPACES PER UNIT

VISITOR PARKING: 0.25 SPACE PER UNIT

REQUIRED: 102 UNITS = 26 SPACES
REQUIRED 1 HANDICAP SPACE PER 25 REGULAR SPACES

REQUIRED SPACES: 102 x 0.25 = 25.5 ≈ 26 SPACES

PROVIDED SPACES: 36 SPACES

TOTAL: 34 VISITOR SPACES + 2 H.C. SPACES = 36 SPACES

Tree Protection Area (T.P.A):

TPA IN EXISTING PHASES

TPA – A = 12,728 SF (0.29 AC)
TPA – B = 26,500 SF (0.61 AC)
TPA – C = 44,311 SF (1.02 AC)
TPA – D = 26,500 SF (0.61 AC)
TPA – E = 44,311 SF (1.02 AC)
TPA – F = 133,059 SF (3.05 AC)

EXISTING TPA AREA: 328,834 SF (13.45 AC)

EXISTING LAND AREA: 2,841,160 (65.22 AC)

328,834 SF (13.45 AC) / 2,841,160 (65.22 AC) = 11.57%

TPA IN PROPOSED PHASES

TPA – 1.0 = 69,213 SF (1.59 AC)
TPA – 2.0 = NOT USED
TPA – 3.0 = 120,708 SF (2.77 AC)
TPA – 4.0 = 4,517 SF (0.10 AC)
TPA – 5.0 = 31,516 SF (0.72 AC)

PROPOSED TPA AREA: 225,954 SF (5.19 AC)

PROPOSED LAND AREA: 971,388 SF (22.30 AC)

225,954 SF (5.17 AC)/ 971,388 SF (22.30 AC) = 23.26%

TPA OVER TOTAL PROPERTY (87.33 AC)

TOTAL LAND AREA: 3,812,905 SF (87.53 AC)

TOTAL TPA: 554,788 SF (12.74 AC)

554,788 SF (12.74 AC) / 3,812,905 SF (87.53 AC) = 14.55%

ALTHOUGH NOT REQUIRED FOR THE EXISTING PHASES, PROPOSED EXCESS TPA INCREASES THE OVERALL PROPERTY TPA TO 14.53%

= PHASE LINE

= ROAD NETWORK

= TREE PRESERVATION AREA (EXISTING PHASES)

= TREE PRESERVATION AREA (PROPOSED PHASES)

EXISTING PHASES	
PHASE #	YIELD
1	167 LOTS
2	17 LOTS
3	73 LOTS
TOTAL	257 LOTS

PROPOSED PHASES		
PHASE #	YIELD	ROAD LENGTH
4	45 LOTS	2,654 FT (.50 MILES)
5	57 LOTS	2,557 FT (.48 MILES)
6	8 LOTS	-0-
7	9 LOTS	-0-
TOTAL	119	5211 FT (0.98 MILES)

EXISTING + PROPOSED	257+119=376 TOTAL LOTS

ZONING = RM RESIDENTIAL MOBILE HOME	
MINIMUM WIDTH	30'
MINIMUM DEPTH	80'
SEPARATION FROM UNITS	15'
SEPARATION FROM ACCESSORY UNITS	10' FROM MOBILE HOMES
MAXIMUM IMPERVIOUS	50%
PERIMETER SETBACKS FOR MOBILE HOMES	40' FROM PROPERTY LINE
SETBACKS FOR MOBILE HOMES	15' FROM LOT LINES
ACCESSORY STRUCTURE SETBACKS	7.5' FROM LOT LINES

Date:	By:	Revisions:
3/27/23	BIL	REVISED PER OT OF DELAND COMMENTS

Designed: MWR
Drawn: BIL
Checked: MWR
Scale: 1" = 100'
Project: 2022-04
Date: 10-14-2022
File: Meadowlea Village Ph. 4-7.dwg

MICHAEL W. RADCLIFFE ENGINEERING, INC.
2611 S.E. Lake Weir Avenue Ocala, FL 34471 (352) 629-5500 FAX (352) 629-1510
Certificate No. EB-0006198 • Michael W. Radcliffe P.E. #31176 • Christopher A. Gwin P.E. #66568
www.radcliffeengineering.com

COPYRIGHT © 2023 Michael W. Radcliffe Engineering, Inc. All Rights Reserved

Project Name: Meadowlea Village Ph. 4&5

Sheet Name: Master Plan

Sheet No. M001 of M001

X:\MWRE Projects\Meadowlea MW\2022-04 Meadowlea Village Ph. 4-7\Design\CADD\Meadowlea Village Ph. 4-7.dwg 3/28/2023 3:33 PM

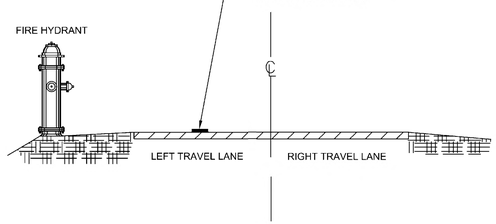

DATE: 11/05/2021 **REFLECTIVE PAVEMENT MARKER FOR FIRE HYDRANT LOCATION** W423

City of DeLand - Standard Details

Approved Ford Valve for Service Lines

1" SERVICE

Pack Joint for Copper or Plastic Tubing (CTS) Inlet by Meter Swivel Nut

Catalog Number	Description: Valve Size	Description: Serv. Line Size	Description: Meter Size	Approx. Wt. Lbs.
B43-211W-NL	5/8"	1/2"	5/8"	1.4
B43-212W-NL	5/8"	1/2"	5/8"x3/4" & 3/4"	1.5
►♦ B43-231W-NL	5/8"	3/4"	5/8"	1.6
►♦ B43-232W-NL	5/8"	3/4"	5/8"x3/4" & 3/4"	1.7
► B43-331W-NL	3/4"	3/4"	5/8"	2.1
►♦ B43-332W-NL	3/4"	3/4"	5/8"x3/4" & 3/4"	2.4
►♦ B43-334W-NL	3/4"	3/4"	1"	2.3
► B43-341W-NL	3/4"	1"	5/8"	2.7
►♦ B43-342W-NL	3/4"	1"	5/8"x3/4" & 3/4"	2.4
►♦ B43-344W-NL	3/4"	1"	1"	2.7
►♦ B43-444W-NL	1"	1"	1"	3.2
B43-454W-NL	1"	1-1/4"	1"	3.4

2" SERVICE

Pack Joint for Copper or Plastic Tubing (CTS) by Female Iron Pipe Thread

Catalog Number	Valve Size	CTS End	FIP End	Approx. Wt. Lbs.
►♦ * B41-333-NL	3/4"	3/4"	3/4"	2.0
►♦ B41-334-NL	3/4"	3/4"	1"	2.1
►♦ B41-343-NL	3/4"	1"	3/4"	2.2
►♦ B41-344-NL	3/4"	1"	1"	2.4
♦ BL41-344-4-875-NL	3/4"	1"	1"	3.1
►♦ * B41-444-NL	1"	1"	1"	2.8
♦ B41-454-NL	1"	1-1/4"	1"	3.2
♦ B41-455-NL	1"	1-1/4"	1-1/4"	3.7
♦ B41-555-NL	1-1/4"	1-1/4"	1-1/4"	5.6
♦ **B41-666-NL	1-1/2"	1-1/2"	1-1/2"	7.0
B41-677-NL	1-1/2"	2"	2"	9.6
♦ **B41-777-NL	2"	2"	2"	11.1

DATE: 11/05/2021 **VALVE FOR WATER AND RECLAIM SERVICE LINE** W424

City of DeLand - Standard Details

Approved Muller Valve for Service Lines

1" SERVICE

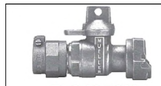

P-24350N

Mueller 300 Ball Straight Meter Valve
Mueller Pack Joint Connection for CTS O.D.* tubing x meter swivel nut**.
Quarter turn check - lock wing. 360° turn option available by adding -3 suffix to catalog number.
Example: P-24350-3

Catalog size	3/4"x5/8" R †	3/4" R †	3/4"	5/8"x3/4"x1"	1" R †	1"
Meter size	5/8"	5/8"x3/4", 3/4"	5/8"x3/4", 3/4"	5/8"x3/4", 3/4"	1"	1"
Tubing size	3/4"	3/4"	3/4"	1"	1"	1"

2" SERVICE

P-25172N

Mueller 300 Ball Curb Valve
Inlet: Mueller Pack Joint Connection for CTS O.D.* tubing
Outlet: F.I.P. thread
Quarter turn check-this valve may be ordered with 360° turn option by adding -3 to end of catalog number (P-25172-3)

3/4"R	3/4"	1"R	1"	1-1/2"	2"

DATE: 11/05/2021 **VALVE FOR WATER AND RECLAIM SERVICE LINE** W425

City of DeLand - Standard Details

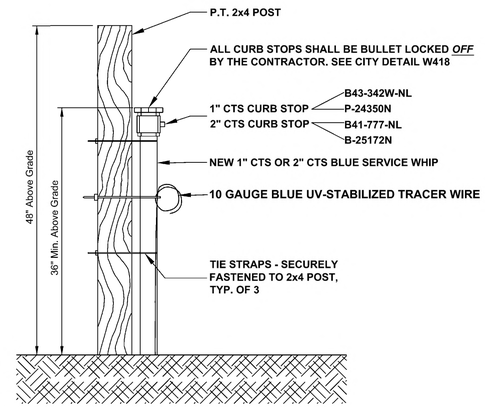

DATE: 11/05/2021 **NEW POTABLE SERVICE WHIP** W426

City of DeLand - Standard Details

CITY OF DELAND, FLORIDA
1102 S. GARFIELD AVENUE, DELAND, FLORIDA 32724

DATE: 11/05/2021
CHECKED BY: NAME
SCALE: NOT TO SCALE
DRAWN BY: ERIC SAMPSON

TITLE: WATER SYSTEM DETAILS (Sheet 3)

FILE: drive letter/details locations

3M LOCATING MARKER BALLS PROGRAMMABLE AND NON-PROGRAMMABLE NOTES:

- Programmable and Non-Programmable Marking Balls will be used on all Sewer, Potable and Reclaim projects
- For information on the Programmable and Non-Programmable Balls that the City requires see spec sheet for details
- Programmable Balls will be placed at all fittings ie. Tees, Couplings, 90, 45, and 22.
- Information will be recorded on a spread sheet. For information that needs to be recorded see spec sheet for an example template for the 3M Marker Balls
- Non-Programmable Marking Balls will used as follow:

- Potable: End of Service Line when buried
- Wastewater: Ball will be placed at the curb line to mark lateral location prior to end of service.
- Reclaim: End of Service Line when buried

- Desired bury depth is 1.5 feet to 3 feet. Five foot is the maximum depth for these devices

1420-LOCATER FOR MARKER BALLS

3M™ Dynatel™ Electronic Marker System (EMS) Marker Locators 1420 series is microprocessor-based systems that quickly and efficiently locate underground markers—years after construction or maintenance. -

The 3M™ Dynatel™ 1420 Marker Locators are designed to be accurate, fast and integrated allowing you to accurately and easily:

• Locate, read and write to 3M iD markers

• Pinpoint the depth and location of all existing models of properly installed underground passive EMS markers

• Conduct direct depth reading of markers

• Locate two different marker frequencies simultaneously

Specifications

2200RB Rechargeable Battery Not Included	2200RB Rechargeable Battery Not Included
Cable/Pipe Locate No	Cable/Pipe Locate No
Carrying Bag Included No	Carrying Bag Included No
Coupler Size No Coupler	Coupler Size No Coupler
Direct Connect Cable N/A	Direct Connect Cable N/A
EMS Caution Tape Finding Capability No	EMS Caution Tape Finding Capability No
Family 1420 Series	Family 1420 Series
Fault Finding Capability No	Fault Finding Capability No
	Locator Type Marker

3M DYNATEL LOCATING AND MARKING ELECTRONIC MARKER SYSTEM:

1423-XR/ID-POTABLE

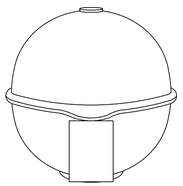

The 3M™ EMS Extended-Range Ball Markers have a self-leveling design providing accurate, horizontal position regardless of how it is placed in the ground, making the job of precisely locating underground facilities easier.

Featured Benefits

- Positive identification of underground water facilities
- iD Marker allows for programming of customer specific information
- Unique self leveling design simplifies installation
- No external power source needed
- Resistant to elements
- 5 foot (1.5 meter) detection distance
- Color conforms to APWA standards

SPECIFICATIONS:

COLOR:	BLUE
DIAMETER (METRIC):	10.4 CM
EMS CAUTION TAPE FINDING CAPABILITY:	N/A
MARKER DEPTH:	5 FEET (1.5M)
MARKER DIMENSION (INCH):	4 INCH DIAMETER
MARKER TYPE:	BALL
PROGRAMMABLE/PASSIVE:	PROGRAMMABLE
RANGE:	0 TO 5 LINEAR FOOT
RoHS 2011/65/EU Compliant:	UNDETERMINED
RoHS EU Comments:	CONTACT 3M FOR INFORMATION
Solution for:	ACCESS NETWORK: FTTH/FTTB/CATV
	ACCESS NETWORK: xDSL, LONG-HAUL/METRO
	LOOP NETWORK: OUTDOOR
	WIRELESS NETWORK: BACKHAUL

1424-XR/ID-SEWER

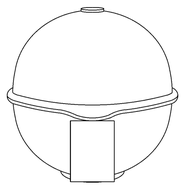

The 3M™ EMS Extended-Range Ball Markers have a self-leveling design providing accurate, horizontal position regardless of how it is placed in the ground, making the job of precisely locating underground facilities easier.

Featured Benefits

- Positive identification of underground wastewater facilities
- iD Marker allows for programming of customer specific information
- Unique self leveling design simplifies installation
- No external power source needed
- Resistant to elements
- 5 foot (1.5 meter) detection distance
- Color conforms to APWA standards

SPECIFICATIONS:

COLOR:	GREEN
DIAMETER (METRIC):	10.4 CM
EMS CAUTION TAPE FINDING CAPABILITY:	N/A
MARKER DEPTH:	5 FEET (1.5M)
MARKER DIMENSION (INCH):	4 INCH DIAMETER
MARKER TYPE:	BALL
NUMBER OF FREQUENCIES:	N/A
PROGRAMMABLE/PASSIVE:	PROGRAMMABLE
RANGE:	0 TO 5 LINEAR FOOT
RoHS 2011/65/EU Compliant:	UNDETERMINED
RoHS EU Comments:	CONTACT 3M FOR INFORMATION
Solution for:	ACCESS NETWORK: FTTH/FTTB/CATV
	ACCESS NETWORK: xDSL, LONG-HAUL/METRO
	LOOP NETWORK: OUTDOOR
	WIRELESS NETWORK: BACKHAUL

1428-XR/ID-RECLAIMED

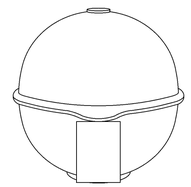

The 3M™ EMS Extended-Range Ball Markers have a self-leveling design providing accurate, horizontal position regardless of how it is placed in the ground, making the job of precisely locating underground facilities easier.

Featured Benefits

- Positive identification of underground general purpose / reclaimed water facilities
- iD Marker allows for programming of customer specific information
- Unique self leveling design simplifies installation
- No external power source needed
- Resistant to elements
- 5 foot (1.5 meter) detection distance
- Color conforms to APWA standards

SPECIFICATIONS:

COLOR:	PURPLE
DIAMETER (METRIC):	10.4 CM
EMS CAUTION TAPE FINDING CAPABILITY:	N/A
MARKER DEPTH:	5 FEET (1.5M)
MARKER DIMENSION (INCH):	4 INCH DIAMETER
MARKER TYPE:	BALL
NUMBER OF FREQUENCIES:	N/A
PROGRAMMABLE/PASSIVE:	PROGRAMMABLE
RANGE:	0 TO 5 LINEAR FOOT
RoHS 2011/65/EU Compliant:	UNDETERMINED
RoHS EU Comments:	CONTACT 3M FOR INFORMATION
Solution for:	ACCESS NETWORK: FTTH/FTTB/CATV
	ACCESS NETWORK: xDSL, LONG-HAUL/METRO
	LOOP NETWORK: OUTDOOR
	WIRELESS NETWORK: BACKHAUL

1403-XR-POTABLE

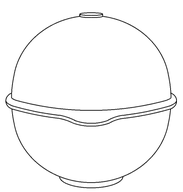

The 3M™ EMS Extended-Range Ball Markers have a self-leveling design providing accurate, horizontal position regardless of how it is placed in the ground, making the job of precisely locating underground facilities easier.

Featured Benefits

- Positive identification of underground water facilities
- Unique self leveling design simplifies installation
- No external power source needed
- Resistant to elements
- 5 foot (1.5 meter) detection distance
- Color conforms to APWA standards

SPECIFICATIONS:

COLOR:	BLUE
DIAMETER (METRIC):	10.4 CM
EMS CAUTION TAPE FINDING CAPABILITY:	N/A
MARKER DEPTH:	5 FEET (1.5M)
MARKER DIMENSION (INCH):	4 INCH DIAMETER
MARKER TYPE:	BALL
NUMBER OF FREQUENCIES:	N/A
PROGRAMMABLE/PASSIVE:	PASSIVE
RANGE:	0 TO 5 LINEAR FOOT
RoHS 2011/65/EU Compliant:	UNDETERMINED
RoHS EU Comments:	CONTACT 3M FOR INFORMATION
Solution for:	ACCESS NETWORK: FTTH/FTTB/CATV
	ACCESS NETWORK: xDSL, LONG-HAUL/METRO
	LOOP NETWORK: OUTDOOR
	WIRELESS NETWORK: BACKHAUL

1404-XR-SEWER

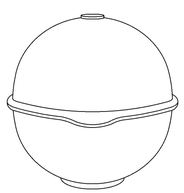

The 3M™ EMS Extended-Range Ball Markers have a self-leveling design providing accurate, horizontal position regardless of how it is placed in the ground, making the job of precisely locating underground facilities easier.

Featured Benefits

- Positive identification of underground wastewater facilities
- Unique self leveling design simplifies installation
- No external power source needed
- Resistant to elements
- 5 foot (1.5 meter) detection distance
- Color conforms to APWA standards

SPECIFICATIONS:

COLOR:	GREEN
DIAMETER (METRIC):	10.4 CM
EMS CAUTION TAPE FINDING CAPABILITY:	N/A
MARKER DEPTH:	5 FEET (1.5M)
MARKER DIMENSION (INCH):	4 INCH DIAMETER
MARKER TYPE:	BALL
NUMBER OF FREQUENCIES:	N/A
PROGRAMMABLE/PASSIVE:	PASSIVE
RANGE:	0 TO 5 LINEAR FOOT
RoHS 2011/65/EU Compliant:	UNDETERMINED
RoHS EU Comments:	CONTACT 3M FOR INFORMATION
Solution for:	ACCESS NETWORK: FTTH/FTTB/CATV
	ACCESS NETWORK: xDSL, LONG-HAUL/METRO
	LOOP NETWORK: OUTDOOR
	WIRELESS NETWORK: BACKHAUL

1408-XR-RECLAIMED

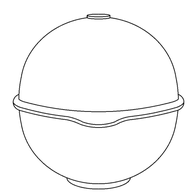

The 3M™ EMS Extended-Range Ball Markers have a self-leveling design providing accurate, horizontal position regardless of how it is placed in the ground, making the job of precisely locating underground facilities easier.

Featured Benefits

- Positive identification of underground general purpose facilities
- Unique self leveling design simplifies installation
- No external power source needed
- Resistant to elements
- 5 foot (1.5 meter) detection distance
- Color conforms to APWA standards

SPECIFICATIONS:

COLOR:	PURPLE
DIAMETER (METRIC):	10.4 CM
EMS CAUTION TAPE FINDING CAPABILITY:	N/A
MARKER DEPTH:	5 FEET (1.5M)
MARKER DIMENSION (INCH):	4 INCH DIAMETER
MARKER TYPE:	BALL
NUMBER OF FREQUENCIES:	N/A
PROGRAMMABLE/PASSIVE:	PASSIVE
RANGE:	0 TO 5 LINEAR FOOT
RoHS 2011/65/EU Compliant:	UNDETERMINED
RoHS EU Comments:	CONTACT 3M FOR INFORMATION
Solution for:	ACCESS NETWORK: FTTH/FTTB/CATV
	ACCESS NETWORK: xDSL, LONG-HAUL/METRO
	LOOP NETWORK: OUTDOOR
	WIRELESS NETWORK: BACKHAUL

CITY OF DELAND, FLORIDA
1102 S. GARFIELD AVENUE, DELAND, FLORIDA 32724

DATE: 11/05/2021
CHECKED BY: ERIC M. SAMPSON
SCALE: NOT TO SCALE
DRAWN BY: MARK LA GRECA

TITLE: UTILITY MARKER BALL LOCATERS

FILE: drive letter/details locations

NOTES:
1. RECLAIM MAINS TO BE ON SOUTH or WEST SIDE OF R.O.W., APPROX. 4 FT. BACK OF CURB UNLESS OTHERWISE AUTHORIZED BY CITY ENGINEER.
2. SERVICE CONNECTIONS TO BE 4 FT. FROM SIDE LOT LINE ON EITHER SIDE OF LOT. THESE SERVICES TO BE CONSISTENT WITHIN THE SUBDIVISION. DRIVEWAYS SHALL NOT BE BUILT OVER METERS.
3. ALL LINES SHALL BE PRESSURE TESTED (TEST FOR TWO HOURS @ 150 P.S.I.) UNDER THE DIRECTION OF THE UTILITIES DEPARTMENT. AFTER SUCCESSFUL COMPLETION OF THE TESTING, THE PRESSURE SHALL REMAIN ON THE SYSTEM AT ALL TIMES.
4. TEN FT. SEPARATION REQUIRED BETWEEN PARALLEL WATER & SANITARY SEWER LINES.
5. SADDLE IS REQUIRED FOR ALL SERVICE CONNECTIONS TO 4" PVC MAINS. SADDLE IS REQUIRED FOR 2" SERVICE CONNECTIONS TO 6" and LARGER PVC MAINS. LARGEST SERVICE CONNECTION TO A 4" MAIN IS MIN. 1-1/2" and LARGEST TO ANY MAIN IS 2".
6. MINIMUM DISTANCE BETWEEN SERVICE TAPS TO BE NOT LESS THAN 36".
7. SINGLE SERVICE TAP SHALL BE 1".
8. DOUBLE SERVICE TAP SHALL BE 1-1/ 2".
9. ALL FITTINGS SHALL BE BRASS ONLY.
10. ALL CORPORATION STOPS, SHALL BE "FORD" OR "MUELLER" ONLY.
11. ALL 3/4", 1", 1-1/2", & 2" W.M., SHALL BE SDR 9, 200 psi, ASTMD 2737, (PURPLE) POLYETHYLENE TUBING.
12. ALL BRASS FITTINGS SHALL BE LEAD FREE.
13. NO GALVANIZED FITTINGS CONNECTED TO BRASS FITTINGS.
14. PLANTINGS AND OBSTRUCTIONS SHOULD BE AVOIDED WITHIN 3 FT. RADIUS FOR SERVICE ACTIVITY.
15. METER BOX SHOULD HAVE A 2'x2'x6' CLEARANCE AROUND IT.

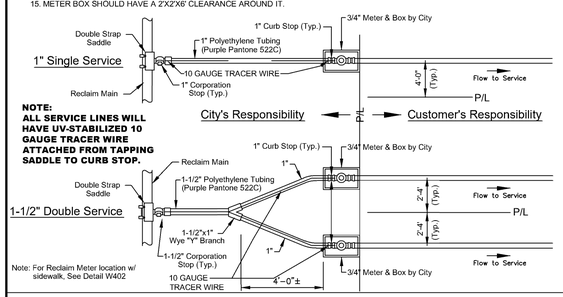

NOTE:
ALL SERVICE LINES WILL HAVE UV-STABILIZED 10 GAUGE TRACER WIRE ATTACHED FROM TAPPING SADDLE TO CURB STOP.

DATE: 11/05/2021 **RECLAIM MAIN SERVICE CONNECTION** R401
City of DeLand - Standard Details

NOTES:
1. RECLAIM MAINS TO BE ON SOUTH or WEST SIDE OF R.O.W., APPROX. 4 FT. BACK OF CURB UNLESS OTHERWISE AUTHORIZED BY CITY ENGINEER.
2. SERVICE CONNECTIONS TO BE 4 FT. FROM SIDE LOT LINE ON EITHER SIDE OF LOT. THESE SERVICES TO BE CONSISTENT WITHIN THE SUBDIVISION. DRIVEWAYS SHALL NOT BE BUILT OVER METERS.
3. ALL LINES SHALL BE PRESSURE TESTED (TEST FOR TWO HOURS @ 150 P.S.I.) UNDER THE DIRECTION OF THE UTILITIES DEPARTMENT. AFTER SUCCESSFUL COMPLETION OF THE TESTING, THE PRESSURE SHALL REMAIN ON THE SYSTEM AT ALL TIMES.
4. TEN FT. SEPARATION REQUIRED BETWEEN PARALLEL WATER & SANITARY SEWER LINES.
5. SADDLE IS REQUIRED FOR ALL SERVICE CONNECTIONS TO 4" PVC MAINS. SADDLE IS REQUIRED FOR 2" SERVICE CONNECTIONS TO 6" and LARGER PVC MAINS. LARGEST SERVICE CONNECTION TO A 4" MAIN IS MIN. 1-1/2" and LARGEST TO ANY MAIN IS 2".
6. MINIMUM DISTANCE BETWEEN SERVICE TAPS TO BE NOT LESS THAN 36".
7. SINGLE SERVICE TAP SHALL BE 1".
8. DOUBLE SERVICE TAP SHALL BE 1-1/ 2".
9. ALL FITTINGS SHALL BE BRASS ONLY.
10. ALL CORPORATION STOPS, SHALL BE "FORD" OR "MUELLER" ONLY.
11. ALL 3/4", 1", 1-1/2", & 2" W.M., SHALL BE SDR 9, 200 psi, ASTMD 2737, (PURPLE) POLYETHYLENE TUBING.
12. ALL BRASS FITTINGS SHALL BE LEAD FREE.
13. NO GALVANIZED FITTINGS CONNECTED TO BRASS FITTINGS
14. METER BOX SHOULD HAVE A 2'x2'x6' CLEARANCE AROUND IT.

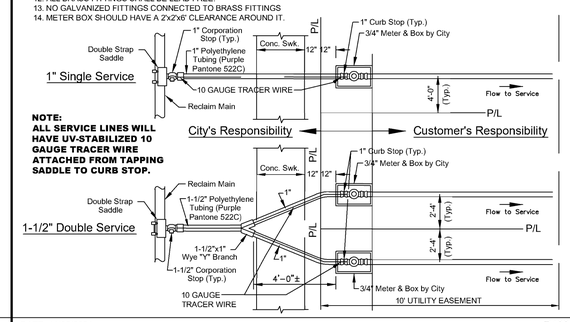

NOTE:
ALL SERVICE LINES WILL HAVE UV-STABILIZED 10 GAUGE TRACER WIRE ATTACHED FROM TAPPING SADDLE TO CURB STOP.

DATE: 11/05/2021 **RECLAIM MAIN SERVICE CONN. WITH SIDEWALK** R402
City of DeLand - Standard Details

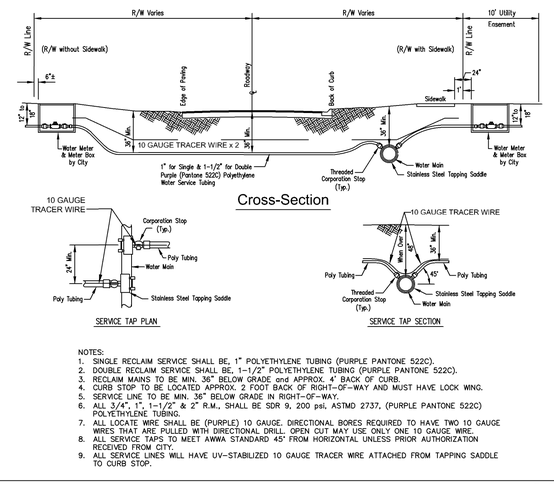

NOTES:
1. SINGLE RECLAIM SERVICE SHALL BE, 1" POLYETHYLENE TUBING (PURPLE PANTONE 522C).
2. DOUBLE RECLAIM SERVICE SHALL BE, 1-1/2" POLYETHYLENE TUBING (PURPLE PANTONE 522C).
3. RECLAIM MAINS TO BE MIN. 36" BELOW GRADE and APPROX. 4' BACK OF CURB.
4. CURB STOP TO BE LOCATED APPROX. 2 FOOT BACK OF RIGHT-OF-WAY AND MUST HAVE LOCK WNG.
5. SERVICE LINE TO BE MIN. 36" BELOW GRADE IN RIGHT-OF-WAY.
6. ALL 3/4", 1", 1-1/2", & 2" R.M., SHALL BE SDR 9, 200 psi, ASTMD 2737, (PURPLE PANTONE 522C) POLYETHYLENE TUBING.
7. ALL LOCATE WIRE SHALL BE (PURPLE) 10 GAUGE, DIRECTIONAL BORES REQUIRED TO HAVE TWO 10 GAUGE WIRES THAT ARE PULLED WITH DIRECTIONAL DRILL. OPEN CUT MAY USE ONLY ONE 10 GAUGE WIRE.
8. ALL SERVICE TAPS TO MEET AWWA STANDARD 45° FROM HORIZONTAL UNLESS PRIOR AUTHORIZATION RECEIVED FROM CITY.
9. ALL SERVICE LINES WILL HAVE UV-STABILIZED 10 GAUGE TRACER WIRE ATTACHED FROM TAPPING SADDLE TO CURB STOP.

DATE: 11/05/2021 **RECLAIM MAIN SERVICE LINES** R403
City of DeLand - Standard Details

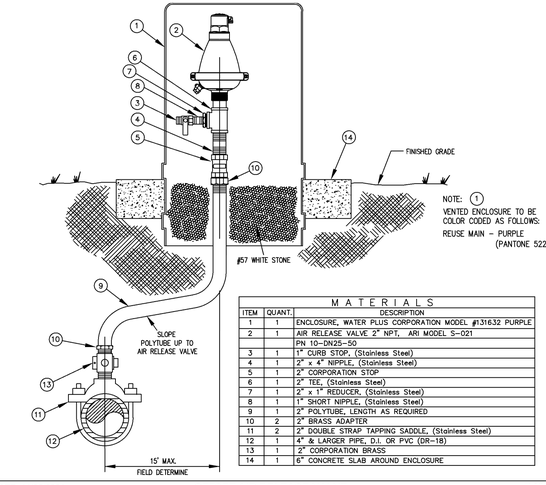

ITEM	QUANT.	MATERIALS DESCRIPTION
1	1	ENCLOSURE, WATER PLUS CORPORATION MODEL #131632 PURPLE
2	1	AIR RELEASE VALVE 2" NPT, ARI MODEL S-021 PN 10-DN25-50
3	1	1" CURB STOP, (Stainless Steel)
4	1	2" x 4" NIPPLE, (Stainless Steel)
5	1	2" CORPORATION STOP
6	1	2" TEE, (Stainless Steel)
7	1	2" x 1" REDUCER, (Stainless Steel)
8	1	1" SHORT NIPPLE, (Stainless Steel)
9	1	2" POLYTUBE, LENGTH AS REQUIRED
10	2	2" BRASS ADAPTER
11	2	2" DOUBLE STRAP TAPPING SADDLE, (Stainless Steel)
12	1	4" & LARGER PIPE, D.I. OR PVC (DR-18)
13	1	2" CORPORATION BRASS
14	1	6" CONCRETE SLAB AROUND ENCLOSURE

DATE: 11/05/2021 **OFFSET AIR RELEASE VALVE** R421
City of DeLand - Standard Details

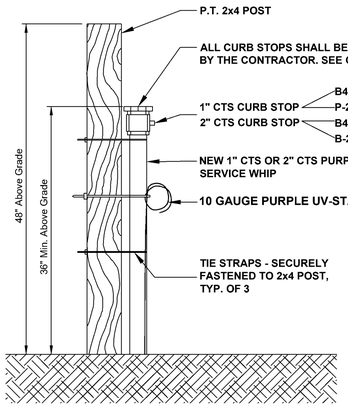

DATE: 11/05/2021 **NEW REUSE SERVICE WHIP** R426
City of DeLand - Standard Details

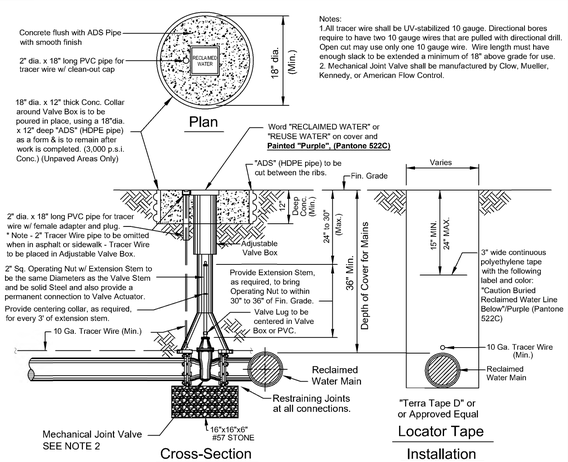

Notes:
1.All tracer wire shall be UV-stabilized 10 gauge. Directional bores require to have two 10 gauge wires that are pulled with directional drill. Open cut may use only one 10 gauge wire. Wire length must have enough slack to be extended a minimum of 18" above grade for use.
2. Mechanical Joint Valve shall be manufactured by Clow, Mueller, Kennedy, or American Flow Control.

DATE: 11/05/2021 **RECLAIMED WATER VALVE SETTING** R450
City of Deland - Standard Details

NOTES:
1. Sign background shall be white, letters shall be black (Hellvetica, Swiss 721, corel, or acceptable equal) and border shall be Pantone Purple 522C.
2. Height of sign will depend on location and surrounding landscape plant types. In all cases, the sign shall visable to the public.
3. Engineering grade refective materials shall be used for sign.
4. Sign materials shall be of 0.040 gauge metal.
5. Sign post shall be 2-3/8" OD steel pipe, hot dip galvanized per ASTM A-123, post to be provided by customer.
6. Mounting hardware shall be stainless steel.
7. Signs shall be place by the contractor in accordance with the City approved plans and/ or as approved by the City. (e.g.) Sign should be posted by entrance to subdivision, storage ponds, irrigation pumps, gate entrances to school facility or game fields, and first and ninth Tees at Golf courses.
8. Public notification should occur in HOA document and City Reclaimed Water Brochure with meter application.

DATE: 11/05/2021 **RECLAIMED WATER SIGNAGE** R451
City of DeLand - Standard Details

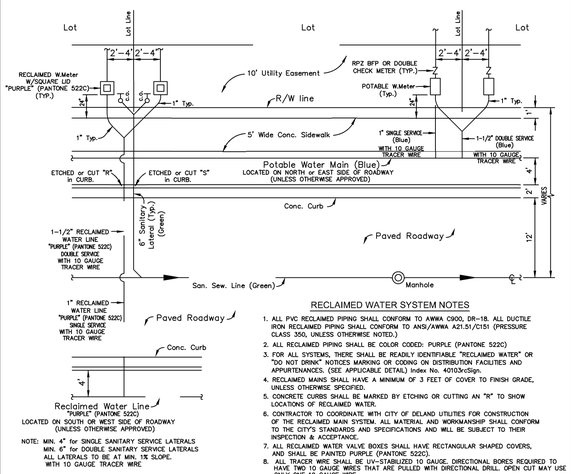

RECLAIMED WATER SYSTEM NOTES
1. ALL PVC RECLAIMED PIPING SHALL CONFORM TO AWWA C900, DR-18. ALL DUCTILE IRON RECLAIMED PIPING SHALL CONFORM TO ANSI/AWWA A21.51/C151 (PRESSURE CLASS 350, UNLESS OTHERWISE NOTED.)
2. ALL RECLAIMED PIPING SHALL BE COLOR CODED: PURPLE (PANTONE 522C)
3. FOR ALL SYSTEMS, THERE SHALL BE READILY IDENTIFIABLE "RECLAIMED WATER" OR "DO NOT DRINK" NOTICES MARKING OR CODING ON DISTRIBUTION FACILITIES AND APPURTENANCES. (SEE APPLICABLE DETAIL) Index No. 40103xcSign.
4. RECLAIMED MAINS SHALL HAVE A MINIMUM OF 3 FEET OF COVER TO FINISH GRADE, UNLESS OTHERWISE SPECIFIED.
5. CONCRETE CURBS SHALL BE MARKED BY ETCHING OR CUTTING AN "R" TO SHOW LOCATIONS OF RECLAIMED WATER.
6. CONTRACTOR TO COORDINATE WITH CITY OF DELAND UTILITIES FOR CONSTRUCTION OF THE RECLAIMED MAIN SYSTEM. ALL MATERIAL AND WORKMANSHIP SHALL CONFORM TO THE CITY'S STANDARDS AND SPECIFICATIONS AND WILL BE SUBJECT TO THEIR INSPECTION & ACCEPTANCE.
7. ALL RECLAIMED WATER VALVE BOXES SHALL HAVE RECTANGULAR SHAPED COVERS, AND SHALL BE PAINTED PURPLE (PANTONE 522C).
8. ALL TRACER WIRE SHALL BE UV-STABILIZED 10 GAUGE. DIRECTIONAL BORES REQUIRED TO HAVE TWO 10 GAUGE WIRES THAT ARE PULLED WITH DIRECTIONAL DRILL. OPEN CUT MAY USE ONLY ONE 10 GAUGE WIRE.

DATE: 11/05/2021 **RECLAIMED WATER SYSTEM LAYOUT** R452
City of DeLand - Standard Details

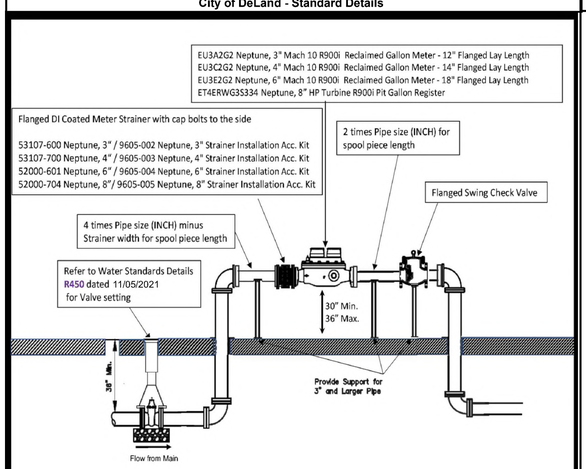

DATE: 11/05/2021 **3" AND ABOVE RECLAIMED METER SET** R453
City of DeLand - Standard Details

1. THE CITY OF DeLand's UTILITIES DEPARTMENT (386-626-7250) SHALL BE GIVEN A MINIMUM OF 48 HOURS ADVANCE NOTICE (NOT INCLUDING HOLIDAYS OR WEEKENDS) PRIOR TO the BEGINNING OF ANY RECLAIMED WATER SYSTEM CONSTRUCTION.
2. DEWATERING SHALL BE PROVIDED TO KEEP GROUNDWATER ELEVATION A MINIMUM OF 6 INCHES BELOW PROPSED RECLAIMED WATER MAIN.
3. ALL RECLAIMED WATER MAINS SHALL BE LAID ON A FIRM FOUNDATION WITH ALL UNSUITABLE MATERIAL (MUCK, ROCK, COQUINA, ETC.) REMOVED AND REPLACED WITH CLEAN GRANULAR MATERIAL.
4. TRENCHES SHALL BE BACKFILLED WITH MATERIAL ACCEPTABLE TO THE CITY WITH A MINIMUM COMPACTION OF 95% IN UNPAVED AREAS AND 98% IN PAVED AREAS IN ACCORDANCE WITH AASHTO T-180.
5. IT SHALL BE THE CONTRACTORS RESPONSIBILITY TO ENSURE THAT TRENCH COMPACTION TESTS ARE PROVIDED AT POINTS 1 FOOT ABOVE THE PIPE AND AT 1 FOOT VERTICAL INTERVALS TO FINISH GRADE, AT A MINIMUM SPACING OF EVERY 300 FEET
6. 3" METALLIZED PIPE LOCATION TAPE SHALL BE LOCATED BETWEEN 15" AND 24" BELOW FINISHED GRADE OR AS SPECIFIED BY MANUFACTURER FOR ALL PVC LINES. MARKER TAPE SHALL BE PROVIDED ON ALL DIPS AS WELL.
7. ALL SINGLE RESIDENTIAL RECLAIMED WATER SERVICES SHALL BE 1" AND DOUBLE RESIDENTIAL SERVICES SHALL BE 1-1/2". SERVICES SHALL BE CTS 3408 HIGH DENSITY POLYETHYLENE TUBING RATED FOR A MINIMUM OF 200 PSI WITH SDR 9 (CTS). THE TUBING SHALL HAVE A VIRGIN HIGH DENSITY POLYETHYLENE CENTER FOR WHICH THE MANUFACTURER SHALL FURNISH A CERTIFICATE OF PURITY. THE TUBING SHALL BE "PURPLE" (PANTONE) IN COLOR AND SHALL HAVE THE WORDS "RECLAIMED WATER" PERMANENTLY PRINTED ON THE OUTSIDE. THE TUBING SHALL HAVE U.V. PROTECTION AND SHALL NOT BE AFFECTED BY DIRECT SUNLIGHT. THE TUBING SHALL COMPLY WITH OR EXCEED THE APPLICABLE STANDARDS OF A.S.D.M. D1248, D3350, D2239, D2737, N.S.F.-14 AND A.W.W.A. C901 AND SHALL COME WITH A LIFETIME WARRANTY. APPROVED SIZES: 1", 1-1/2" AND 2" DIAMETERS. ACCEPTABLE MANUFACTURERS: ENDOT ENDOCORE RWT OR APPROVED EQUAL
8. REFER TO "NEW POTABLE AND REUSE SERVICE WHIP" R426.
9. RECLAIMED WATER VALVES SHALL BE PLACED AT ALL STREET INTERSECTIONS AND AT MAXIMUM SPACING OF 1,000 FEET.
10. AT ALL RECLAIMED WATER MAIN TEES AND CROSSES, VALVES SHALL BE INSTALLED ON ALL LEGS EXCEPT ONE.
11. APPROVED WATER VALVE TYPES MUELLER OR CLOW:
    A. STANDARD GATE VALVES EQUAL TO OR LESS THAN 24" DIAMETER (AWWA C-500) OR RESILIENT SEAT GATE VALVES (AWWA C-509)
    B. TAPPING VALVES WITH MECHANICAL OR STAINLESS STEEL TAPPING SLEEVE.
12. ALL RECLAIMED WATER VALVES SHALL BE ADJUSTED TO FINISH GRADE AND THE CAPS SHALL BE PAINTED PURPLE (PANTONE 522C) TO MAKE THEM PLAINLY DISTINGUISHABLE.
13. AS STANDARD PRACTICE RECLAIMED WATER MAINS SHALL BE INSTALLED 4 FEET OFF THE BACK OF THE CURB ON THE OPPOSITE SIDE OF THE POTABLE WATER LINES OR AS APPROVED BY THE CITY.

DATE: 11/05/2021 **RECLAIMED WATER NOTES - 1 OF 3** R460
City of DeLand - Standard Details

14. ALL RECLAIMED WATER MAINS SHALL HAVE A MINIMUM COVER OF 36 INCHES. IN SPECIAL CASES WHERE IT IS IMPOSSIBLE OR INAPPROPRIATE TO PROVIDE ADEQUATE COVER, DUCTILE IRON PRESSURE CLASS 350 OR CONCRETE ENCASEMENT MAY BE USED AS APPROVED BY THE CITY.
15. THE CONTRACTOR SHALL NOTIFY THE CITY'S DESIGNATED INSPECTOR PRIOR TO ATTEMPTING TO CLEAR ANY RECLAIM WATER MAIN FOR USE. THE INSPECTOR SHALL COORDINATE WITH CITY PERSONNEL AT THE RECLAIMED WATER PLANT 48 HOURS PRIOR TO BEGINNING OF ANY FULL-DIAMETER FLUSH OF MAINS. THE CONTRACTOR WILL CONDUCT A STANDARD WATER PRESSURE TEST, 150 PSI STATIC PRESSURE FOR A PERIOD OF 2 HOURS PER AWWA POTABLE WATER STANDARDS. THE RECLAIMED LINES WILL THEN BE DISINFECTED WITH CHLORINE, FLUSHED CLEAR AGAIN.
16. THE CONTRACTOR SHALL BE REQUIRED TO PIG ALL RECLAIMED MAINS IN EXCESS OF 4" IN DIAMETER AND PRIMARY DISTRIBUTION MAINS LOCATED ON COLLECTOR AND ARTERIAL ROADWAYS. LAUNCHING AND EXTRACTION POINTS SHALL BE DETERMINED BY THE CONTRACTOR. ALL PIGGING OPERATIONS SHALL BE WITNESSED BY A PUBLIC UTILITIES REPRESENTATIVE OR CITY UTILITY INSPECTOR.
17. RECLAIMED WATER MAINS SHALL BE PVC AWWA CLASS C-900 OR C-905, CL 150 (COLOR: "PURPLE" PANTONE 522C) OR DIP PRESSURE CLASS 350, STANDARD CEMENT LINED UNLESS APPROVED OTHERWISE BY THE CITY.
18. ALL RECLAIMED WATER MAINS SHALL USE A THRUST RESTRAINED JOINT METHOD IN COMPLIANCE WITH THE DUCTILE IRON PIPE RESEARCH ASSOCIATION (DIPRA) GUIDELINES. IN THE EVENT THAT PVC FITTINGS ARE SPECIFIED, THE RESTRAINED JOINT SHALL BE MODIFIED IN ACCORDANCE WITH THE RECOMMENDED ADDITIONAL RESTRAINED LENGTH REQUIRED FOR PIPE WRAPPED WITH POLYETHYLENE. IN NO INSTANCE SHALL THRUST BLOCKS BE PERMITTED.
19. MEGALUGS, BOLTLESS RESTRAINED JOINTS, OR GRIPPER GASKETS SHALL BE USED ON ALL RESTRAINED JOINT INSTALLATIONS. MINIMUM DEPTH OF BURY ON PIPES NOT MEETING REQUIRED COVER REQUIREMENTS SHALL FOLLOW THE MOST RECENT DIPRA THRUST RESTRAINT DESIGN GUIDELINES. SEE DETAILS W408 AND W409.
20. GRIPPER RING GASKETS BY ROMAC MAY BE USED AS APPROPRIATE FOR RESTRAINING PRESSURE PIPE TO FITTINGS, VALVES, ETC.
21. UPON CONSTRUCTION COMPLETION AND ACCEPTANCE OF THE SYSTEM, IT SHALL BE THE DESIGN ENGINEER'S RESPONSIBILITY TO INSURE THAT THE SYSTEM IS PROPERLY CERTIFIED AND ACCEPTED BY THE CITY OF DeLand UTILITIES AND "AS-BUILTS" ARE PROVIDED TO THE CITY, PRIOR TO ANY USE OF THIS SYSTEM.
22. ALL RECLAIMED WATER MAINS AND SERVICE LINES SHALL BE READILY DISTINGUISHABLE BY THEIR "PURPLE" (PANTONE 522C) COLOR OR TAPE MARKINGS. DUCTILE IRON PIPE SHALL BE WRAPPED WITH PURPLE PANTONE 522C POLYETHYLENE.
23. ALL RECLAIMED WATER SERVICES SHALL BE MARKED ALONG THE OUTSIDE EDGE OF CURB WITH AN "R". VALVES AND BLOW-OFFS FOR RECLAIMED WATER MAINS SHALL BE MARKED BY AN "X" SET INTO THE CURB.
24. RECLAIM WATER SERVICES SHALL BE NORMALLY DOUBLE 1-1/2" SERVICES LOCATED AT SIDE LOT LINES ALTERNATING WITH POTABLE WATER SERVICE LOCATIONS. IN INSTANCES WHERE RECLAIMED WATER SERVICES NEED TO BE OFFSET, DUE TO SEWER LATERAL CONNECTION. 1" SINGLE SERVICES SHALL BE SPECIFIED, THESE SERVICES MAY BE OFFSET FROM THE LOT LINE A MAXIMUM DISTANCE OF 4.0'.

DATE: 11/05/2021 **RECLAIMED WATER NOTES - 2 OF 3** R461
City of DeLand - Standard Details

25. MAXIMUM OBTAINABLE SEPARATION OF PUBLIC RECLAIMED WATER MAINS, STORMWATER MAINS, AND SANITARY SEWER MAINS SHALL BE MAINTAINED. A MINIMUM HORIZONTAL SEPARATION OF THREE (3) FEET (OUTSIDE TO OUTSIDE), TEN (10) FEET PREFERRED. A MINIMUM VERTICAL SEPARATION OF SIX (6) INCHES, IF WATER MAIN IS ABOVE STORM, SAN. SEW. & RECLAIMED MAINS. A MINIMUM VERTICAL SEPARATION OF EIGHTEEN (18) INCHES, IF WATER MAIN IS BELOW STORM, SAN. SEW. & RECLAIMED MAINS. (Ref Detail W420)
26. NO RECLAIMED WATER HOSE BIBBS ARE PERMITTED.
27. A 75-FOOT SETBACK DISTANCE SHALL BE PROVIDED FROM PUBLIC ACCESS REUSE WETTED AREAS TO ANY PUBLIC AND ANY PRIVATE POTABLE WATER SUPPLY WELLS.
28. LOW TRAJECTORY NOZZLES ARE REQUIRED WITHIN 100 FEET OF PUBLIC EATING, DRINKING OR BATHING FACILITIES.
29. ALL TAPPING OF MAINS SHALL BE PERFORMED BY THE CONTRACTOR AND WITNESSED BY THE CITY INSPECTOR. SCHEDULING OF THESE CONNECTIONS SHALL REQUIRED A MINIMUM 48 HOUR NOTIFICATION (MEASURED ON NORMAL WORK DAYS) DIRECTED TO THE CITY'S DESIGNATED SITE INSPECTOR WHO SHALL COORDINATE THE WORK DIRECTLY WITH THE CITY'S UTILITIES DEPARTMENT. SUBSEQUENTLY, THE CONNECTION SHALL BE SCHEDULED TO COMMENCE BETWEEN 7:00 A.M. AND NOON ON THE APPROPRIATE DAY, UNLESS ALTERNATE TIMES HAVE BEEN APPROVED BY THE CITY.
30. WITH RESPECT TO TIE-IN CONNECTIONS, THE CITY RESERVES THE RIGHT TO REQUIRE CONNECTIONS TO BE PERFORMED DURING PERIODS OF LOW FLOW IN ORDER TO MINIMIZE SERVICE DISRUPTION TO EXISTING CUSTOMERS.
31. ALL WORK PERFORMED UPON RECLAIMED WATER FACILITIES OWNED OR PROPOSED TO BE OWNED BY THE CITY, SHALL BE CONSTRUCTED BY AN UNDERGROUND UTILITY OR GENERAL CONTRACTOR LICENSED IN THE STATE OF FLORIDA AND REGISTERED WITH THE CITY.
32. FOR CONSTRUCTION PURPOSES, THE PLANS SHALL PROVIDE DIMENSION OF THE PROPOSED LOCATIONS OF ALL RECLAIMED WATER MAINS MEASURED FROM THE BACK OF CURB (OR EDGE OF PAVEMENT IF NO CURB EXISTS).
33. ALL HDPE PIPE RECLAIMED WATER MAINS SHALL BE SDR 11 UNLESS SPECIFICALLY NOTED OTHERWISE. THE HDPE PIPE SHALL BE SIZED TO MATCH THE EXTERNAL DIAMETER OF THE PVC OR DIP TO WHICH IT IS ATTACHED.
34. ALL P.V.C. PIPE SHALL BE STORED IN SUCH A WAY AS TO PREVENT WARPING, DEFLECTION, OR ANY DEFORMATION.
35. RECLAIMED WATER HYDRANTS ARE NOT ALLOWED BY THE CITY.
36. NO USED, RE-USED, RUSTED, SECOND HAND, OR ANY MATERIAL THAT IS NOT "NEW" SHALL BE USED IN ANY UTILITY IMPROVEMENT PROJECTS WITHIN THE CITIES SERVICE AREA.
37. LARGE RECLAIMED WATER METERS GREATER THAN 2" TAKES A MINIMUM OF 6 WEEKS FOR DELIVERY. IN ADDITION, ALL METERS AND VAULTS GREATER THAN 2" SHALL BE INSTALLED BY THE OWNER/ DEVELOPER OR CONTRACTOR. THE FEE COLLECTED BY THE CITY IS FOR MATERIALS ONLY. ALL METERS, 2" AND LESS, SHALL BE INSTALLED BY THE CITY, AFTER ALL FEES HAVE BEEN PAID.
38. TYPICALLY, THE CITY PREFERS DOUBLE SERVICE INSTALLATIONS WHEREVER FEASIBLE. WHEN DESIGN CONFLICTS EXIST, SINGLE SERVICES MAY BE ALLOWED. THIS MAY APPLY AT STORMWATER INLETS, FIRE HYDRANTS, FPL TRANSFORMERS, ETC. AND OTHER LOCATIONS DEEMED APPROPRIATE BY THE CITY.
39. ALL RECLAIMED WATER VALVE BOXES SHALL HAVE RECTANGULAR SHAPED COVERS, AND SHALL BE PAINTED "PURPLE" (PANTONE 522C) AND LABELED REUSE OR RECLAIM.

NOTE: DIP = DUCTILE IRON PIPE

DATE: 11/05/2021 **RECLAIMED WATER NOTES - 3 OF 3** R462
City of DeLand - Standard Details

CITY OF DELAND, FLORIDA
1102 S. GARFIELD AVENUE, DELAND, FLORIDA 32724

DATE: 11/05/2021
CHECKED BY: NAME
SCALE: NOT TO SCALE
DRAWN BY: ERIC SAMPSON

TITLE: RECLAIMED WATER DETAILS
FILE: drive letter/details locations

Notes:
1.All tracer wire shall be 10 gauge. Directional bores require to have two 10 gauge wires that are pulled with directional drill. Open cut may use only one 10 gauge wire. Wire length must have enough slack to be extended a minimum of 18" above grade for use.
2. Mechanical Joint Valve shall be manufactured by Clow, Mueller, Kennedy, or American Flow Control.

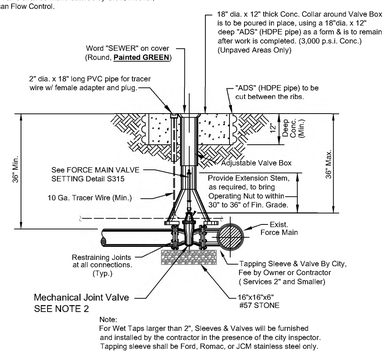

Note:
For Wet Taps larger than 2", Sleeves & Valves will be furnished and installed by the contractor in the presence of the city inspector. Tapping sleeve shall be Ford, Romac, or JCM stainless steel only.

DATE: 11/05/2021 | **FORCE MAIN TAPPING SLEEVE & VALVE** | **S407**

City of DeLand - Standard Details

CITY OF DELAND, FLORIDA
1102 S. GARFIELD AVENUE, DELAND, FLORIDA 32724

DATE: *11/05/2021*
CHECKED BY: *NAME*
SCALE: *NOT TO SCALE*
DRAWN BY: *ERIC SAMPSON*

TITLE: *SANITARY DETAILS*
FILE: *drive letter/details locations*

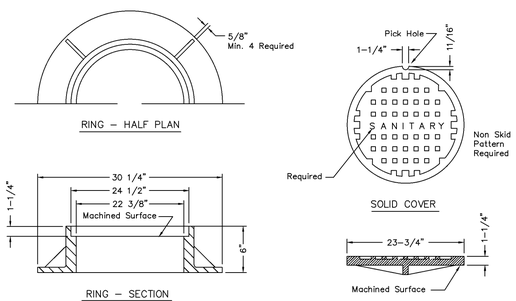

NOTE:
Manufacturers model of storm ring and cover to be approved by City Engineer.

DATE: 11/05/2021 **SANITARY MANHOLE COVER - USF 170-E** **S301**

City of DeLand - Standard Details

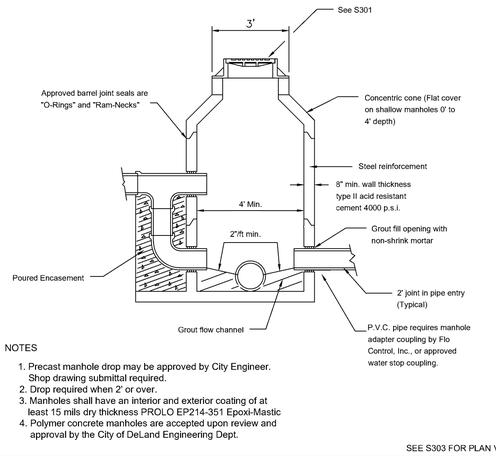

NOTES

1. Precast manhole drop may be approved by City Engineer. Shop drawing submittal required.
2. Drop required when 2' or over.
3. Manholes shall have an interior and exterior coating of at least 15 mils dry thickness PROLO EP214-351 Epoxi-Mastic
4. Polymer concrete manholes are accepted upon review and approval by the City of DeLand Engineering Dept.

SEE S303 FOR PLAN VIEW

DATE: 11/05/2021 **SANITARY MANHOLE** **S302**

City of DeLand - Standard Details

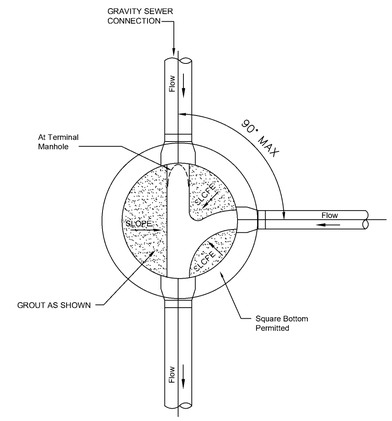

SEE S302 FOR SECTION

DATE: 11/05/2021 **SANITARY MANHOLE** **S303**

City of DeLand - Standard Details

NOTES
1. PRECAST MANHOLE DROP MAY BE APPROVED BY CITY ENGINEER. SHOP DRAWING SUBMITTAL REQUIRED.
2. DROP REQUIRED WHEN 2' OR OVER.
3. MANHOLES SHALL HAVE AN INTERIOR AND EXTERIOR COATING OF AT LEAST 15 MILS DRY THICKNESS PROLO EP214–351 EPOXI–MASTIC OR KOPPERS BITUMASTIC BLACK SOLUTION 300M.

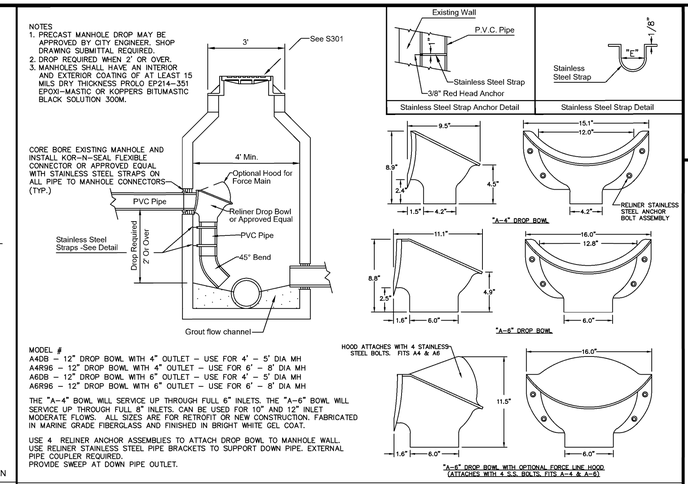

MODEL #
A4DB – 12" DROP BOWL WITH 4" OUTLET – USE FOR 4' – 5' DIA MH
A4R96 – 12" DROP BOWL WITH 4" OUTLET – USE FOR 6' – 8' DIA MH
A6DB – 12" DROP BOWL WITH 6" OUTLET – USE FOR 4' – 5' DIA MH
A6R96 – 12" DROP BOWL WITH 6" OUTLET – USE FOR 6' – 8' DIA MH

THE "A–4" BOWL WILL SERVICE UP THROUGH FULL 6" INLETS. THE "A–6" BOWL WILL SERVICE UP THROUGH FULL 8" INLETS. CAN BE USED FOR 10" AND 12" INLET MODERATE FLOWS. ALL SIZES ARE FOR RETROFIT OR NEW CONSTRUCTION. FABRICATED IN MARINE GRADE FIBERGLASS AND FINISHED IN BRIGHT WHITE GEL COAT.

USE 4 RELINER ANCHOR ASSEMBLIES TO ATTACH DROP BOWL TO MANHOLE WALL. USE RELINER STAINLESS STEEL PIPE BRACKETS TO SUPPORT DOWN PIPE. EXTERNAL PIPE COUPLER REQUIRED.
PROVIDE SWEEP AT DOWN PIPE OUTLET.

DATE: 11/05/2021 **SANITARY MANHOLE - INSIDE DROP FOR GRAVITY & FORCEMAIN** **S304**

City of DeLand - Standard Details

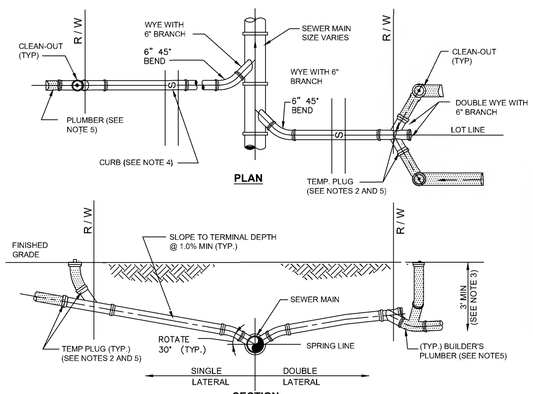

NOTES:
1. INVERT OF SERVICE LATERAL MUST BE ABOVE SPRING LINE.
2. SERVICE LATERAL SHALL BE CAPPED BY THE CONTRACTOR.
3. WYE SHALL BE NO SHALLOWER THAN 3-FEET AND NO DEEPER THAN 5-FEET.
4. CUT OR CAST "S" IN CONCRETE CURB AT SEWER LATERAL LOCATION AND PAINT GREEN.
5. PLUMBER SHALL REMOVE PLUG, INSTALL CLEAN-OUT, AND CONNECT SERVICE LATERAL TO HOUSE.

DATE: 11/05/2021 **SANITARY SERVICE LATERIALS** **S305**

City of DeLand - Standard Details

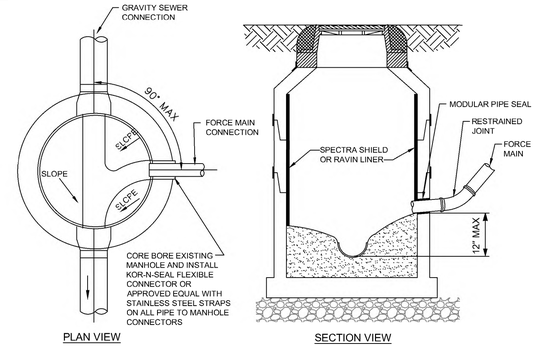

NOTES:
1. FORCE MAIN ORIENTED TO FACILITATE FLOW AND SHALL ENTER MANHOLE WITHIN 1' ABOVE INVERT OF THE EFFLUENT PIPE.
2. BENCH AS REQUIRED FOR NEW FORCE MAIN.
3. MANHOLE RECEIVING FORCE MAIN AND NEXT MANHOLE SHALL BE LINED. EXISTING MANHOLES RECEIVING FORCE MAIN SHALL BE LINED WITH SPECTRA SHIELD OR RAVIN.
4. CONTRACTOR TO COORDINATE THE PRESENCE OF UTILITIES INSPECTOR DURING CORING AND CONNECTIONS TO EXISTING MANHOLES.

DATE: 11/05/2021 **FORCE MAIN TO GRAVITY SEWER CONNECTION** **S306**

City of DeLand - Standard Details

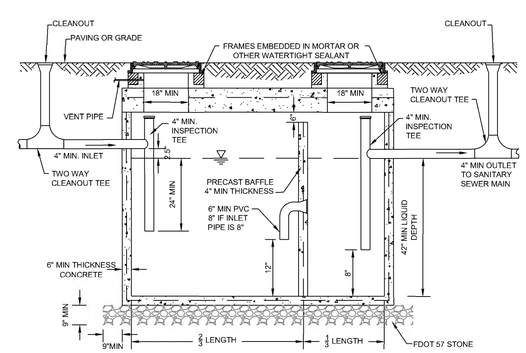

NOTES:
1. SPECIFIC DESIGN DETAILS MUST IN ALL ASPECTS MEET APPLICABLE FLORIDA PLUMBING AND ADMINISTRATIVE CODE.
2. SIZE GREASE INTERCEPTOR - MINIMUM SIZE 750 GAL; MAXIMUM SIZE 1250 GAL.
3. INTERCEPTORS SHALL BE WATER AND GAS TIGHT.
4. ALL FIXTURES LOCATED IN FOOD AND BEVERAGE PREPARATION AREAS SHALL BE ROUTED THOUGH GREASE INTERCEPTOR. RESTROOM WASTE SHALL NOT BE ROUTED THROUGH INTERCEPTOR.
5. BAFFLE REQUIRED; ALTERNATIVE DESIGNS ARE ACCEPTABLE THAT MEET FLORIDA PLUMBING AND ADMINISTRATIVE CODE.
6. LOADS:COVER TO MEET H-20 TRUCK WHEELS WITH 30% IMPACT PER AASHTO. TRAFFIC BEARING FRAME AND COVER TO MEET FDOT STANDARDS AND SHALL BE IMPRINTED WITH THE WORDS "GREASE TRAP".

DATE: 11/05/2021 **GREASE TRAP** **S307**

City of DeLand - Standard Details

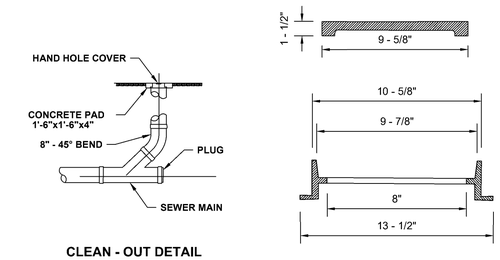

NOTE: HAND HOLE COVER TO BE U.S. FOUNDRY 7621 OR EQUAL

DATE: 11/05/2021 **CLEAN - OUT** **S308**

City of DeLand - Standard Details

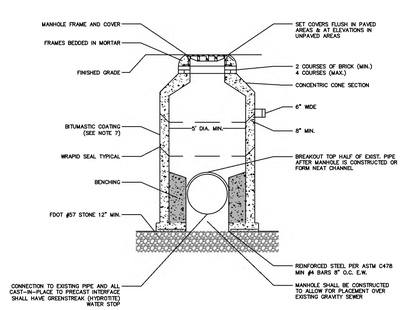

NOTES:

1. DOGHOUSE OPENING MAY ONLY BE USED WHEN PLACING A NEW MANHOLE OVER AN EXISTING LINE; OTHERWISE, THE OPENING MUST BE CAST. SIZE, LOCATION AND ANGLE OF ENTRY SHOULD BE AS REQUIRED BY THE PLANS.
2. OPENINGS IN PRE–CAST UNITS ARE TO BE 4" MINIMUM TO 8" MAXIMUM LARGER THAN THE OUTSIDE DIAMETER OF THE PROPOSED PIPE.
3. MANHOLE COVERS TYPICAL FOR ALL FRAME TYPES.
4. WRAPID SEAL MUST BE USED ON ALL JOINTS, CASTINGS AND RISER RINGS: ON ALL JOINTS ON ROUND AIR RELEASE AND ROUND MANHOLE STRUCTURES.
5. WRAPID SEAL MUST BE USED IN ACCORDANCE WITH MANUFACTURER'S RECOMMENDATIONS.
6. MAX. MANHOLE DEPTH SHALL BE 15' TO LOWEST PIPE INVERT.
7. MANHOLES SHALL HAVE AN INTERIOR AND EXTERIOR COATING OF AT LEAST 15 MILS DRY THICKNESS PROLO EP214–351 EPOXI–MASTIC OR KOPPERS BITUMASTIC BLACK SOLUTION 300M.
8. POLYMER CONCRETE MANHOLES ARE ACCEPTED UPON REVIEW AND APPROVAL BY THE CITY OF DELAND ENGINEERING DEPT.

DATE: 11/05/2021 **DOGHOUSE MANHOLE** **S309**

City of DeLand - Standard Details

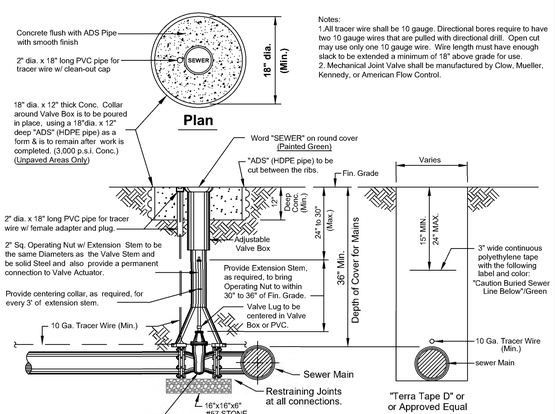

Notes:
1.All tracer wire shall be 10 gauge. Directional bores require to have two 10 gauge wires that are pulled with directional drill. Open cut may use only one 10 gauge wire. Wire length must have enough slack to be extended a minimum of 18" above grade for use.
2. Mechanical Joint Valve shall be manufactured by Clow, Mueller, Kennedy, or American Flow Control.

DATE: 11/05/2021 **FORCE MAIN VALVE SETTING** **S315**

City of Deland - Standard Details

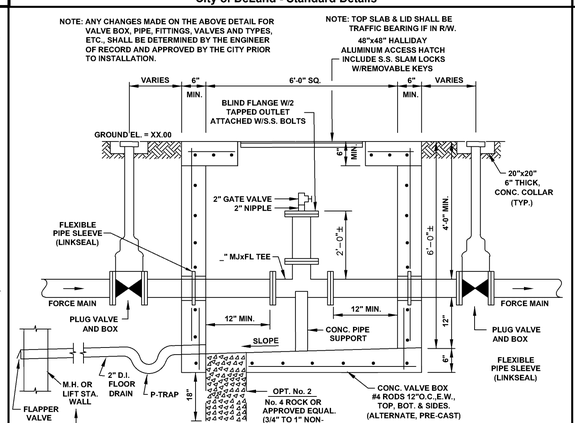

DATE: 11/05/2021 **POLY PIG LAUNCHER** **S310**

City of DeLand - Standard Details

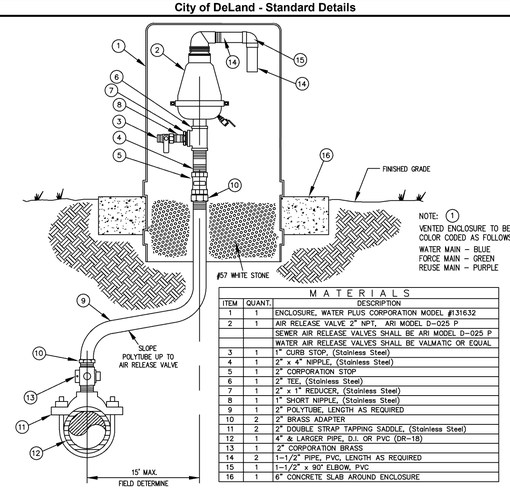

M A T E R I A L S		
ITEM	QUANT.	DESCRIPTION
1	1	ENCLOSURE, WATER PLUS CORPORATION MODEL #131632
2	1	AIR RELEASE VALVE 2" NPT, ARI MODEL D–025 P
		SEWER AIR RELEASE VALVES SHALL BE ARI MODEL D–025 P
		WATER AIR RELEASE VALVES SHALL BE VALMATIC OR EQUAL
3	1	1" CURB STOP, (Stainless Steel)
4	1	2" x 4" NIPPLE, (Stainless Steel)
5	1	2" CORPORATION STOP
6	1	2" TEE, (Stainless Steel)
7	1	2" x 1" REDUCER, (Stainless Steel)
8	1	1" SHORT NIPPLE, (Stainless Steel)
9	1	2" POLYTUBE, LENGTH AS REQUIRED
10	2	2" BRASS ADAPTER
11	2	2" DOUBLE STRAP TAPPING SADDLE, (Stainless Steel)
12	1	4" & LARGER PIPE, D.I. OR PVC (DR–18)
13	1	2" CORPORATION BRASS
14	2	1–1/2" PIPE, PVC, LENGTH AS REQUIRED
15	1	1–1/2" x 90° ELBOW, PVC
16	1	6" CONCRETE SLAB AROUND ENCLOSURE

DATE: 11/05/2021 **OFFSET AIR RELEASE VALVE** **S311**

City of DeLand - Standard Details

CITY OF DELAND, FLORIDA
1102 S. GARFIELD AVENUE, DELAND, FLORIDA 32724

DATE: 11/05/2021
CHECKED BY: NAME
SCALE: NOT TO SCALE
DRAWN BY: ERIC SAMPSON

TITLE: SANITARY DETAILS

FILE: drive letter/details locations

SPARE PARTS

1. VACUUM PUMP AND FLOAT CHECK VALVE
2. CHECK VALVE
3. CW OR CCW IMPELLER
4. PARKER SOLENOID VALVE (25 PSI)
5. MECHANICAL SEAL
6. SONIC START VACUUM DOME HOUSING
7. SONIC START REPLACEMENT PRIME SENSOR

MOTORS:
THE PUMP MOTORS SHALL BE VERTICAL, SOLID SHAFT, NEMA P-BASE, SQUIRREL-CAGE INDUCTION TYPE, SUITABLE FOR 3 PHASE, 60 CYCLE, 480 VOLT ELECTRIC CURRENT. THEY SHALL HAVE CLASS F INSULATION. INSULATION TEMPERATURE SHALL, HOWEVER, BE LIMITED TO CLASS B. THE MOTORS SHALL HAVE NORMAL STARTING TORQUE AND LOW-STARTING CURRENT, AS SPECIFIED BY NEWMAN DESIGN B CHARACTERISTICS. THEY SHALL BE OPEN DRIP-PROOF DESIGN WITH FORCED AIR CIRCULATION BY INTEGRAL FAN. OPENINGS FOR VENTILATION SHALL BE UNIFORMLY SPACED AROUND THE FRAME. LEADS SHALL BE TERMINATED IN CAST CONNECTION BOX AND SHALL BE CLEARLY IDENTIFIED.
THE MOTORS SHALL HAVE 1.15 SERVICE FACTOR. THE SERVICE FACTOR SHALL BE RESERVED THE OWNER'S PROTECTION. THE MOTORS SHALL NOT BE OVERLOADED BEYOND THEIR NAMEPLATE RATING, AT THE DESIGN CONDITIONS, NOR AT ANY HEAD IN THE OPERATING RANGE AS SPECIFIED UNDER OPERATING CONDITIONS.
THE MOTOR-PUMP SHAFT SHALL BE CENTERED, IN RELATION TO THE MOTOR BASE, WITHIN 0.005".
THE SHAFT RUBOUT SHALL NOT EXCEED 0.003".
THE MOTORS SHAFT SHALL BE EQUAL OR EXCEED THE DIAMETER SPECIFIED UNDER MAIN PUMPS AT ALL POINTS FROM IMMEDIATELY BELOW THE TOP BEARING TO THE TOP OF THE IMPELLER HUB.
A BEARING CAP SHALL BE PROVIDED TO HOLD THE BOTTOM MOTOR BEARING IN A FIXED POSITION. BEARING HOUSINGS SHALL BE PROVIDED WITH FITTING FOR LUBRICATION AS WELL AS PURGING OLD LUBRICANT. THE MOTORS SHALL BE FITTED WITH HEAVY LIFTING EYES OR LUGS, EACH CAPABLE OF SUPPORTING THE ENTIRE WEIGHT OF THE PUMP AND MOTOR.

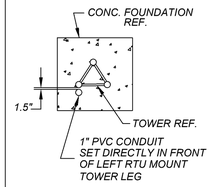

CONDUIT DETAIL

SECTION "A-A"

N.T.S.

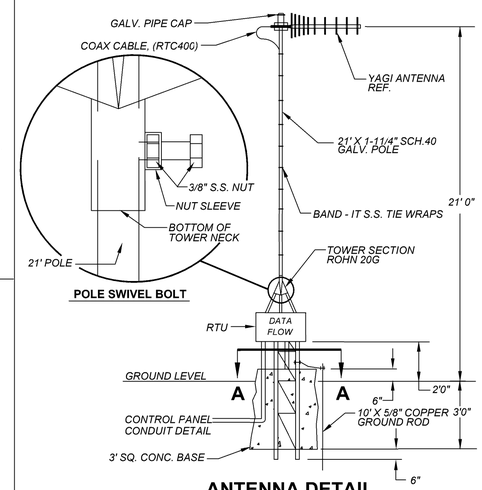

ANTENNA DETAIL

N.T.S.

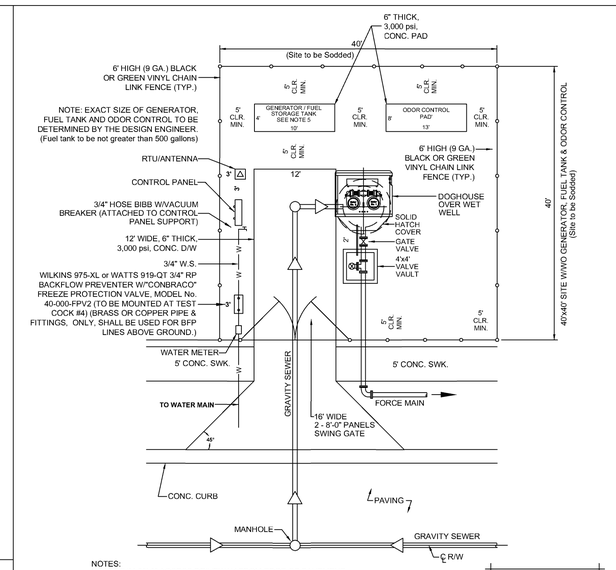

NOTES:
1. MINIMUM 20'-0" ACCESS DRIVEWAY FROM EDGE OF PAVEMENT TO THE GATE SHALL BE PROVIDED ON NON-RESIDENTIAL ROADS.
2. MINIMUM DISTANCE BETWEEN FENCE AND ALL INSTALLED EQUIPMENT SHALL BE 5 FEET UNLESS OTHERWISE NOTED.
3. ALL WORK SHALL BE PER CITY STANDARDS & SPECIFICATIONS.
4. BRASS OR COPPER PIPE & FITTINGS, ONLY, SHALL BE USED FOR HOSE BIBBS AND ALL WATER LINES ABOVE GROUND.
5. CITY ONLY ACCEPTS BLUE STAR, FLORIDA DETROIT DIESEL, OR CATERPILLAR GENERATORS.
6. POLYMER CONCRETE WET WELLS ARE ACCEPTED UPON REVIEW AND APPROVAL BY THE CITY OF DELAND ENGINEERING DEPT.

NOTE: 40'x40' UTILITY EASEMENT SITE TO BE DEDICATED TO CITY OF DELAND

(also a ingress-engress easement shall be provided to Site if required)

LIFT STATION SITE PLAN

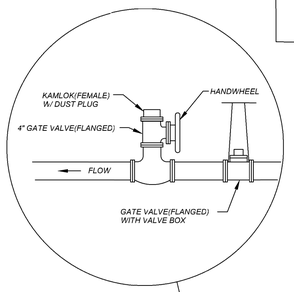

SEE PAGE 2 & 3 FOR CONTROL PANEL RACK AND SET-UP

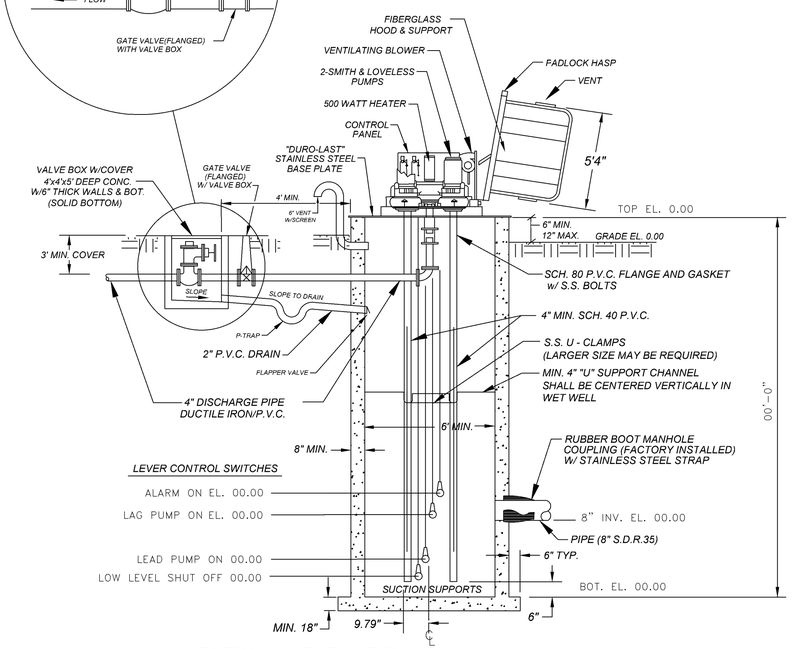

SECTIONAL ELEVATION

N.T.S.

1. ALL MAJOR COMMERCIAL OR RESIDENTIAL PROJECTS MUST PROVIDE AN ON- SITE GENERATOR OR CONTRIBUTE TO THE GENERATOR FUND.
2. GENERATOR MAKE SHALL BE A BLUE STAR, FLORIDA DETROIT DIESEL, OR CATERPILLAR.
3. DIESEL FUEL TANK WITH THREE DAY RUN TIME MIN. (500 Gallon Maximum Storage)
4. AUTOMATIC TRANSFER SWITCH SHALL BE REQUIRED.
5. GENERATOR SHALL BE CONNECTED TO THE REMOTE TELEMETRY UNIT FOR MONITORING.
6. NEW SUBDIVISIONS OF 80 HOMES OR MORE WILL BE REQUIRED TO PROVIDE A UNIT W/ GENERATOR. (LESS THAN 80 HOMES WILL PAY A PRO RATA SHARE $450 PER UNIT)
7. POLYMER CONCRETE WET WELLS ARE ACCEPTED UPON REVIEW AND APPROVAL BY THE CITY OF DELAND ENGINEERING DEPT.

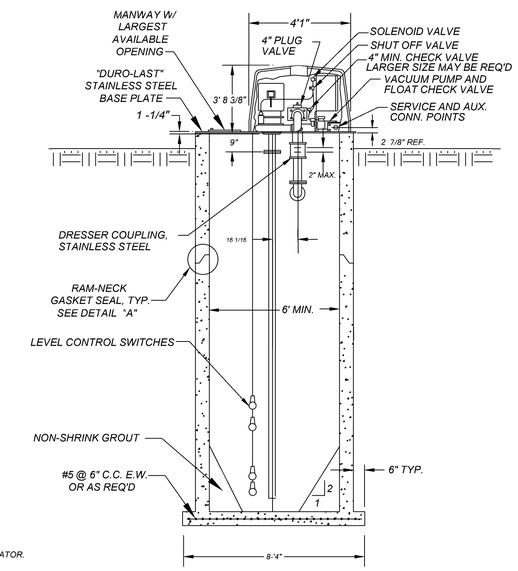

CROSS SECTION

N.T.S.

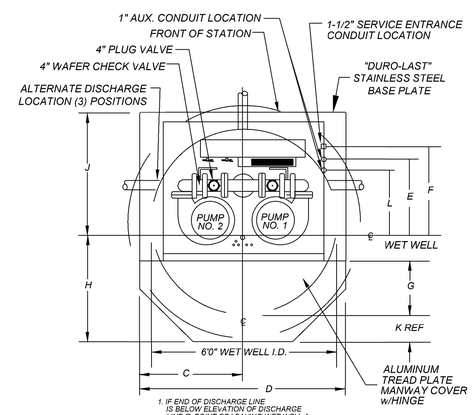

1. IF END OF DISCHARGE LINE IS BELOW ELEVATION OF DISCHARGE LINE @ POINT OF LEAVING WET WELL A PRIMING LOCK LOOP MAY BE REQ.'D.. (CONSULT FACTORY)
2. IF DISCHARGE LINE IS LESS THAN 200' IN LENGTH AN ADDITIONAL CHECK VALVE OR PRIMING LOCK LOOP MAY BE REQ. D. (CONSULT FACTORY)
3. PROVIDE 60" SLOPE IN WET WELL, AS REQ'D.
4. VOLUME IN GALLONS BETWEEN L.L. ON AND L.L. OFF SHOULD BE EQUAL OR GREATER THAN THE PUMPING RATE IN G.P.M.
5. MAXIMUM CAPACITY - 400 G.P.M.

PLAN VIEW

N.T.S.

MACH. CHAMBER (SHOWN LESS HOOD)

GENERAL SITE PLAN NOTES:

1. BACKFLOW PREVENTER SHALL BE, WILKINS 3/4" 975-XL RP or WATTS 3/4" 919-QT RP , W/ "CONBRACO" FREEZE PROTECTION VALVE, MODEL No. 40-000-FPV2, TO BE MOUNTED AT TEST COCK #4.
2. ALL 3/4" HOSE BIBBS SHALL ALSO HAVE A VACUUM BREAKER.
3. LIFT STATION SITE SHALL BE SODDED.
4. PRIOR TO ACCEPTANCE OF THIS LIFT STATION, CITY STAFF WILL OBSERVE THAT THIS STATION WILL PUMP DOWN TO THE CITY'S SPECIFIED CUT-OFF LEVEL UNDER THE CONDITIONS OF A FULL DISCHARGE PRESSURE SEWER, BEING PRESSURIZED W/ ALL OTHER PUMP STATIONS OPERATING, IF THERE EXISTS A MANIFOLD CONDITION. THE DEVELOPER WILL SUPPLY LABOR AND MATERIALS FOR THIS DEMONSTRATION.
5. DO NOT PLACE TRANSFORMERS OR OTHER APPURTENANCES WITHIN THE DESIGNATED EASEMENT THAT WILL IMPEDE MAINTENANCE ACTIVITIES OF THIS STATION.
6. ORIENTATE THE MANWAY TOWARD THE STREET SIDE FOR EASY ACCESS BY OPERATING & MAINTENANCE PERSONNEL.
7. PROVIDE ADEQUATE PAVING (CONC. OR ASPHALT) 12' WIDE DRIVE FROM STREET TO PUMP STATION FOR SAFE ACCESS OF EMERGENCY GENERATOR, SEWER CLEANER, AND OTHER MAINTENANCE VEHICLES.
8. FENCE WITH 6' HIGH COMMERCIAL GRADE CYCLONE FENCE, USING TWO 8 FOOT GATES . FENCE SHOULD BE LOCATED IN SUCH A WAY AS NOT TO INTERFERE WITH ANY FANEL DOORS OR HATCH OPENINGS, AND GATE POSITIONED TO ALLOW EASY ACCESS TO WET WELL. (BLACK OR GREEN VINYL COATED), (REFER TO SITE PLAN)
9. A 40' x 40' TRACT SHALL BE DEDICATED TO THE CITY OF DELAND FOR THE LIFT STATION SITE.
10. PROVIDE "DURO-LAST" STAINLESS STEEL BASE PLATE ON LIFT STATION.
11. BRASS OR COPPER PIPE & FITTINGS, ONLY, SHALL BE USED FOR BFP & HOSE BIBBS AND LINES ABOVE GROUND.
12. ALL SEWER AIR RELEASE VALVES SHALL BE 2" A.R.I. MODEL D-025TPO2.
13. MIN. 2'x'2' AROUND AND 6' CLEARANCE ABOVE METER

CONTROLS:
THE CONTROL EQUIPMENT SHALL BE MOUNTED IN A NEMA TYPE 1 STEEL ENCLOSURE WITH A REMOVABLE ACCESS COVER. THE CIRCUIT BREAKERS, STARTER RESET BUTTONS, AND CONTROL SWITCHES SHALL BE OPERABLE WITHOUT REMOVING THE ACCESS COVER, FOR DEADFRONT OPERATION.
A GFCI TYPE CONVENIENCE OUTLET SHALL BE PROVIDED ON THE SIDE OF THE CABINET FOR OPERATION OF 120 VOLT AC DEVICES. THERMAL MAGNETIC AIR CIRCUIT BREAKERS SHALL BE PROVIDED FOR BRANCH DISCONNECT SERVICE AND SHORT CIRCUIT PROTECTION OF ALL MOTOR CONTROL AND AUXILIARY CIRCUITS.
MAGNETIC ACROSS-THE-LINE STARTERS WITH UNDER-VOLTAGE RELEASE AND OVERLOAD COILS FOR EACH PHASE SHALL BE PROVIDED FOR EACH PUMP MOTOR TO GIVE POSITIVE PROTECTION. EACH SINGLE-PHASE AUXILIARY MOTOR SHALL BE EQUIPPED WITH AN OVER-CURRENT PROTECTION DEVICE IN ADDITION TO THE BRANCH CIRCUIT BREAKER, OR SHALL BE IMPEDANCE PROTECTED. ALL SWITCHES SHALL BE LABELED AND A CODED WIRING DIAGRAM SHALL BE PROVIDED.
TO CONTROL THE OPERATION OF THE PUMPS WITH VARIATIONS OF LIQUID LEVEL IN THE WET WELL, A MINIMUM OF FOUR (4) DISPLACEMENT SWITCHES SHALL BE PROVIDED. A 30' CORD SHALL BE PROVIDED WITH EACH SWITCH. THE CORD SHALL HAVE A CORROSION-RESISTANT VINYL JACKET AND BE MULTI-STRANDED IN ORDER TO PREVENT FATIGUE.
AN AUTOMATIC ALTERNATOR WITH MANUAL SWITCH SHALL BE PROVIDED TO CHANGE THE SEQUENCE OF OPERATION OF THE PUMPS EVERY EIGHT HOURS. ALTERNATING THE PUMPS AT LESS THAN EIGHT HOUR INTERVALS WILL NOT BE ACCEPTABLE. PROVISIONS SHALL ALSO BE MADE FOR THE PUMPS TO OPERATE IN PARALLEL SHOULD THE LEVEL IN THE WET WELL CONTINUE TO RISE ABOVE THE STARTING LEVEL FOR THE LAG PUMP.

WET WELL DIA.	DIM "A"	DIM "B"	DIM "C"	DIM "D"	DIM "E"	DIM "F"	DIM "G"	DIM "H"	DIM "J"	DIM "K"	DIM "L"
6'- 0"	2"	1'-1 13/16"	3'-4"	6'-8"	2'-1 3/8"	2'-5 7/8"	1'-8"	3'-10"	3'-5 1/2"	10"	1'-8 7/8"

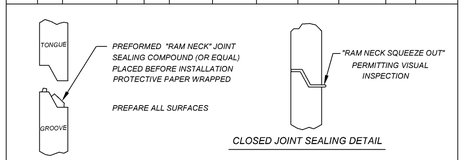

DETAIL "A"

N.T.S.

Note:
Air release valves shall be provided at all high points on force main.

Wet Well (Anti-Floation)

Displacement = XX,XXX lbs. Up
Structure = XX,XXX lbs. Down

Valve Vault (Anti-Floation)

Displacement = X,XXX lbs. Up
Structure = X,XXX lbs. Down

Index No.
30800
REVISED 5/31/07
REVISED 8/6/08
REVISED 10/12/09
REVISED 4/8/10
REVISED 8/1/13
REVISED 9/2/14
REVISED 5/15/17
REVISED 7/24/18
REVISED 11/05/21
SHEET 1 OF 3

City of DeLand, Engineering Services
1102 S. Garfield Avenue, DeLand, Florida 32724

SCALE: NOT TO SCALE
DATE: 11/05/2021
DRAWN BY: ERIC SAMPSON
CHECKED BY:

TITLE: SANITARY LIFT STATION

FILE: LIFTSTATION.dwg

DETAIL "A"

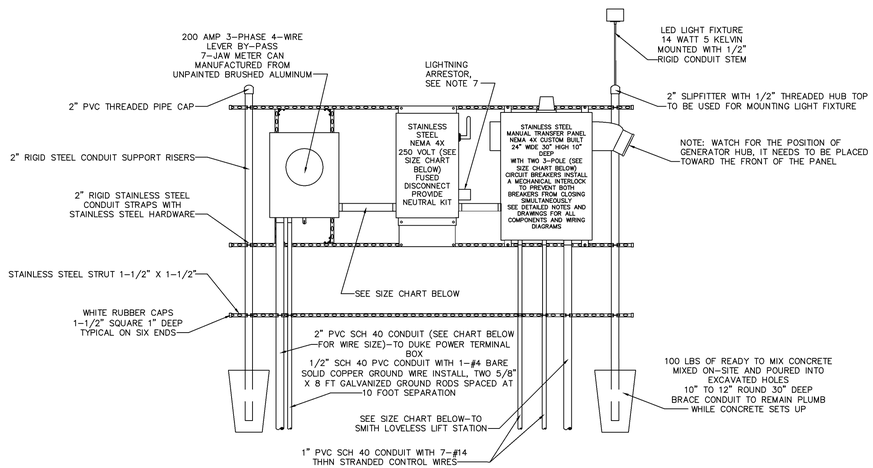

240 VOLT POWER RACK WITHOUT GENERATOR

DETAIL "B"

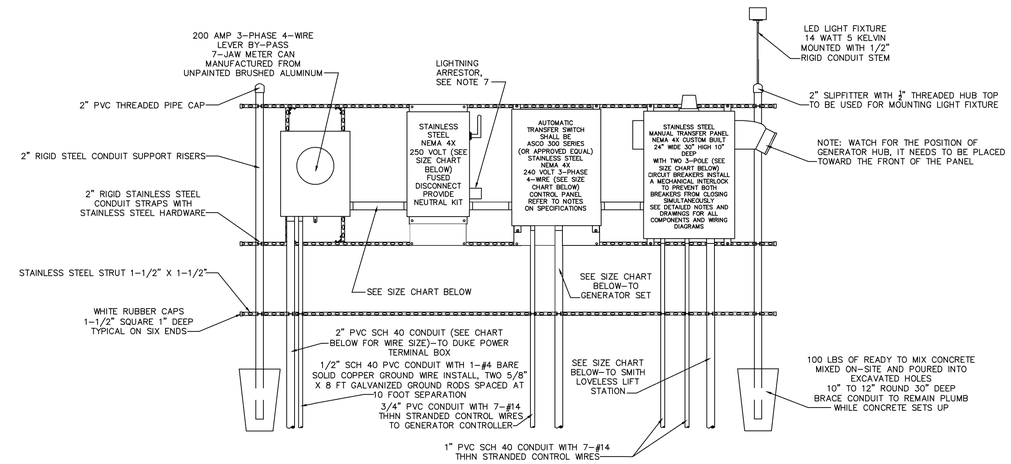

240 VOLT POWER RACK WITH GENERATOR AUTOMATIC TRANSFER SWITCH

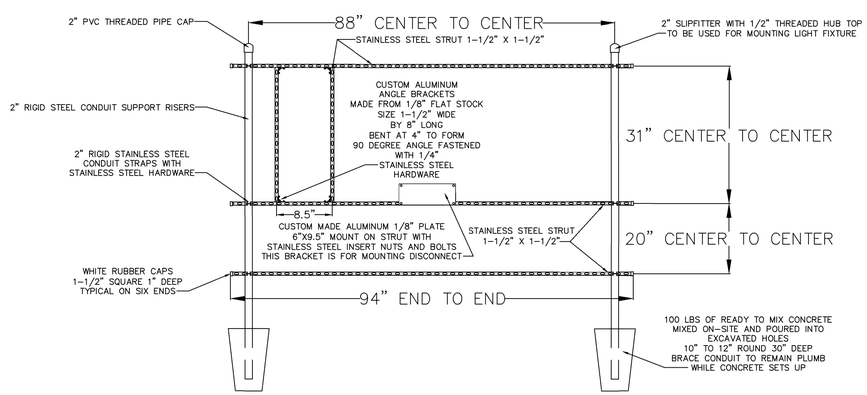

RACK FRAMING DETAILS
240 VOLT WITHOUT AUTOMATIC TRANSFER SWITCH

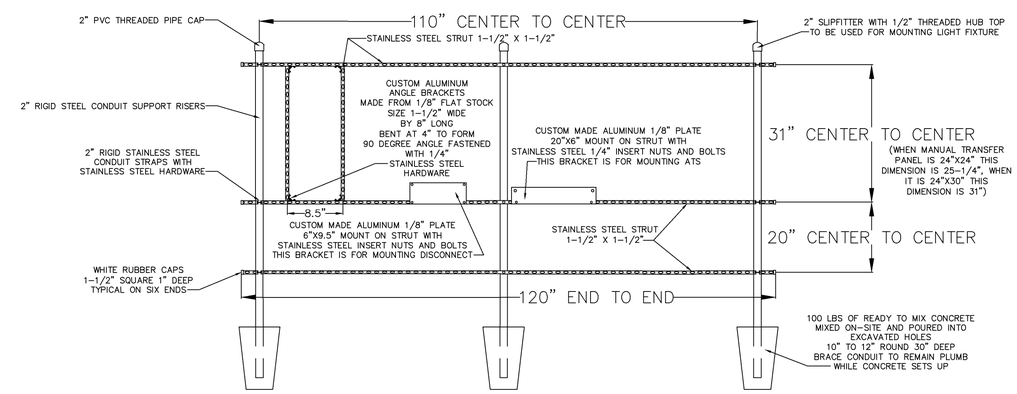

RACK FRAMING DETAILS
240 VOLT WITH AUTOMATIC TRANSFER SWITCH

CONTROL GENERATOR RECEPTACLE PANEL

1. ENCLOSURE : NEMA 4X STAINLESS, 304 GRADE, 14 GAUGE, GASKETED, #4 BRUSHED FINISH, U.L. AND CSA APPROVED, HASP AND STAPLE FOR PADLOCKING, INSIDE PRINT POCKET, STAINLESS STEEL HINGE. MIN. SIZE 24"x 24"x 8" FOR UP TO 15 H.P.
2. MAIN BREAKER : SQUARE D HEAVY DUTY SIZED PROPERLY FOR FULL LOAD OF STATION PLUS 25%.
3. EMERGENCY BKR.: SQUARE D HEAVY DUTY SIZED PROPERLY FOR FULL LOAD OF STATION PLUS 25%.
4. MECH. INTERLOCK: ALL ALUMINUM AND STAINLESS STEEL W/POSITIVE MEANS OF LOCKING OFF BREAKER NOT IN USE. THE BREAKERS WILL PROTRUDE THROUGH INNER DOOR.
5. RECEPTACLE: RUSSELL STOLL JRS1044FR (230 VOLT ONLY), MELTRIC PART #37-98047 (480 VOLT ONLY)
6. ANGLE ADAPTER: RUSSELL STOLL JAAB-10, 20 DEG. ADAPTER
7. LIGHTNING ARRESTOR: HEAVY DUTY, SQUARE D P/N SDSA3650
8. PHASE MONITOR: DIVERSIFIED P/N SLA-230-ASA, 8 PIN WITH N.O. AND N.C. CONTACTS WIRE TO TERMINAL FOR RTU EQUIPMENT.
9. HIGH WATER ALARM: RED, LEXAN, W/NO EXTERNAL SCREWS.
10. HWA RELAY: SQUARE D OR OMRON, 8 PIN DOUBLE POLE, DOUBLE THROW WIRED TO RTU TERMINAL.
11. ALARM HORN: RED, WHEELOCK P/N 31T-115 MOUNTED TO RED WEATHER PROOF CAST BOX ON EXTERIOR OF ENCLOSURE.
12. ALARM RELAY: SQUARE D OR OMRON, 8 PIN DOUBLE POLE, DOUBLE THROW WIRED TO RTU TERMINAL.
13. ALARM RESET/SIL: SQUARE D, WEATHER PROOF MOUNTED ON EXTERIOR OF ENCLOSURE.
14. ENCL. BACKPLATE: ALUMINUM, 12 GAUGE
15. TERMINAL STRIP: BUCHANON P/N 0625
16. GROUND LUG: BUCHANON P/N 824
17. NEUTRAL LUG: BUCHANON P/N 824
18. MAIN LOAD LUG: SQUARE D P/N U3
19. LABELS: ALL BREAKERS AND SWITCHES TO BE IDENTIFIED BY PERMANENTLY ATTACHED LABEL TO PANEL DOOR INTERIOR
20. MOUNTING SCREWS: STAINLESS STEEL 304
21. SCHEMATIC DWG.: PROTECTED BY PLASTIC COATING AND ATTACHED TO PANEL DOOR INTERIOR.
22. MANUFACTURER: STACON, ECS OR CITY OF DELAND APPROVAL.
23. R.T.U.: (DATA FLOW MELBOURNE FLA. (R.T.U. 204) OR EQUAL TO BE INSTALLED BY CITY- DEVELOPER TO BEAR ALL COSTS.
24. PROVIDE SPARE PARTS - SEE SPARE PARTS LIST
25. WET WELL TO BE COATED INSIDE AND OUT WITH MIN. 24 MILS OF COAL/TAR EPOXY
26. EQUIVALENT PRODUCTS CAN ONLY BE APPROVED UPON RECEIPT OF WRITTEN AUTHORIZATION FROM THE CITY OF DELAND.

SIZE CHART

STEP #1: DETERMINE LIFT STATION SIZE & SPECIFICATIONS FROM THE UTILITY CONTRACTOR OR CITY OF DELAND ENGINEERING DEPT.

STEP #2: MAKE NOTE OF THE FOLLOWING: THE VOLTAGE FOR THE STATION, THE NUMBER OF PUMPS (2 OR 3) & THE HORSEPOWER OF PUMPS.

STEP #3: REFER TO THE ELECTRICAL SERVICE DATA CHARTS FOR THE STANDARD 2 PUMP OR 3 PUMP STATION (FOUND ON SHEET 3 OF 3).

STEP #4: USE THE VOLTAGE COLUMN AND THE HORSEPOWER ROW TO FIND THE TOTAL STATION FULL LOAD AMPS.

STEP #5: UPON DETERMINING THE FULL LOAD AMPS OF THE STATION, THE SERVICE ENTRANCE SIZE SHALL NOT BE SMALLER THAN 100 AMPS. STATIONS THAT REQUIRE A SERVICE SIZE LARGER THAN 100 AMPS SHALL BE SIZED CLOSEST TO THE STANDARD SIZES LISTED BELOW.

SERVICE SIZE	CONDUIT SIZE	WIRE SIZE	BREAKER OR FUSE RATING
100 AMP	1-1/2"	#3 THHN CU	100 AMP
125 AMP	1-1/2"	#2 THHN CU	125 AMP
150 AMP	2"	#1 THHN CU	150 AMP
200 AMP	2"	3/0 THHN CU	200 AMP
225 AMP	2-1/2"	4/0 THHN CU	225 AMP

Index No.
30800
REVISED 11/05/21
SHEET 2 OF 3

City of DeLand, Engineering Services
1102 S. Garfield Avenue, DeLand, Florida 32724

DATE: *11/05/2021*
CHECKED BY:
SCALE: *NOT TO SCALE*
DRAWN BY: *ERIC SAMPSON*

TITLE: *SANITARY LIFT STATION*

FILE: *LIFT_STATION_DETAILS_A_B.dwg*

DETAIL "C"

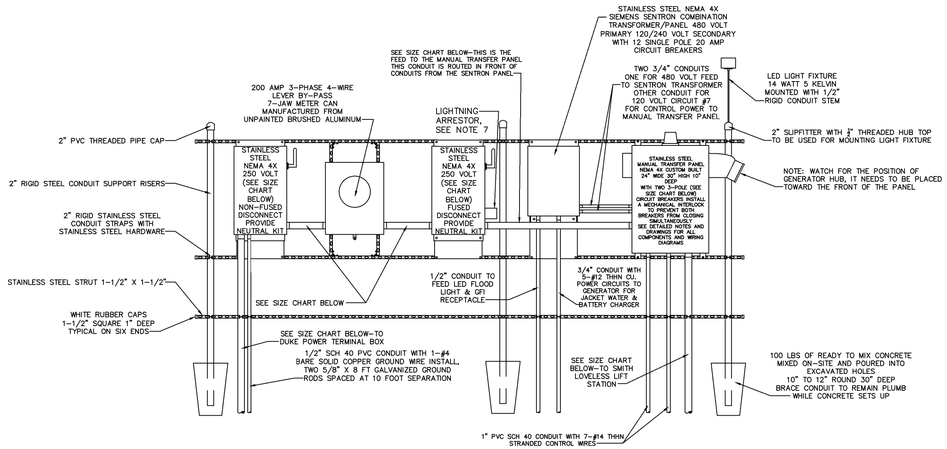

480 VOLT POWER RACK WITHOUT GENERATOR AUTOMATIC TRANSFER SWITCH

DETAIL "D"

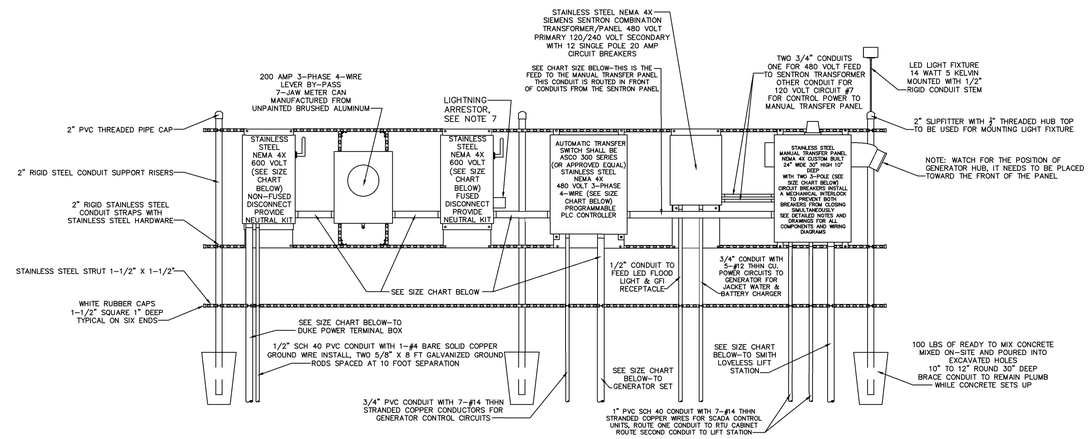

480 VOLT POWER RACK WITH GENERATOR WITH AUTOMATIC TRANSFER SWITCH

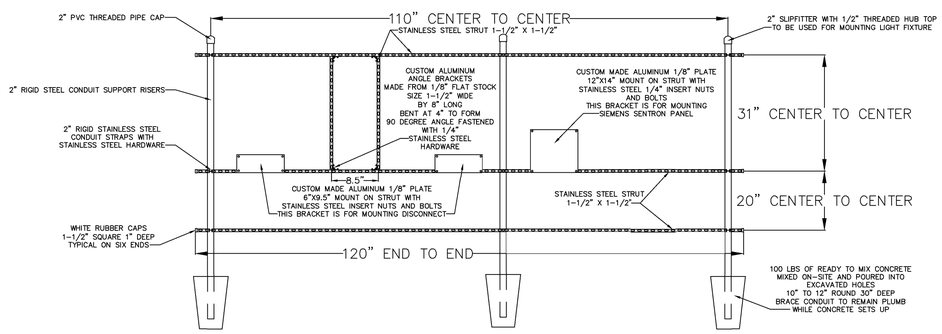

RACK FRAMING DETAILS 480 VOLT WITHOUT AUTOMATIC TRANSFER SWITCH

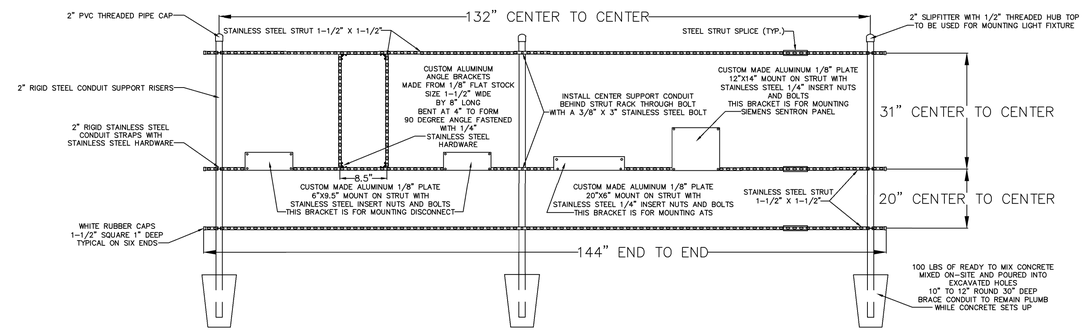

RACK FRAMING DETAILS 480 VOLT WITH AUTOMATIC TRANSFER SWITCH

CONTROL GENERATOR RECEPTACLE PANEL

1. ENCLOSURE ; NEMA 4X STAINLESS, 304 GRADE, 14 GAUGE, GASKETED, #4 BRUSHED FINISH, U.L. AND CSA APPROVED, HASP AND STAPLE FOR PADLOCKING, INSIDE PRINT POCKET, STAINLESS STEEL HINGE. MIN. SIZE 24" x 24"x 8" FOR UP TO 15 H.P.
2. MAIN BREAKER : SQUARE D HEAVY DUTY SIZED PROPERLY FOR FULL LOAD OF STATION PLUS 25%.
3. EMERGENCY BKR.: SQUARE D HEAVY DUTY SIZED PROPERLY FOR FULL LOAD OF STATION PLUS 25%.
4. MECH. INTERLOCK: ALL ALUMINUM AND STAINLESS STEEL W/POSITIVE MEANS OF LOCKING OFF BREAKER NOT IN USE. THE BREAKERS WILL PROTRUDE THROUGH INNER DOOR.
5. RECEPTACLE: RUSSELL STOLL JRS1044FR (230 VOLT ONLY), MELTRIC PART #37-98047 (480 VOLT ONLY)
6. ANGLE ADAPTER: RUSSELL STOLL JAAB-10, 20 DEG. ADAPTER
7. LIGHTNING ARRESTOR: HEAVY DUTY, SQUARE D F/N SDASA3650, OR INTERMATIC AG503C 600V.
8. PHASE MONITOR: DIVERSIFIED F/N SLA-230-ASA, 8 PIN WITH N.O. AND N.C. CONTACTS WIRE TO TERMINAL FOR RTU EQUIPMENT.
9. HIGH WATER ALARM: RED, LEXAN, W-/NO EXTERNAL SCREWS.
10. HWA RELAY: SQUARE D OR OMRON, 8 PIN DOUBLE POLE, DOUBLE THROW WIRED TO RTU TERMINAL.
11. ALARM HORN: RED, WHEELOCK F/N 31T-115 MOUNTED TO RED WEATHER PROOF CAST BOX ON EXTERIOR OF ENCLOSURE.
12. ALARM RELAY: SQUARE D OR OMRON, 8 PIN DOUBLE POLE, DOUBLE THROW WIRED TO RTU TERMINAL.
13. ALARM RESET/SIL: SQUARE D, WEATHER PROOF MOUNTED ON EXTERIOR OF ENCLOSURE.
14. ENCL. BACKPLATE: ALUMINUM, 12 GAUGE
15. TERMINAL STRIP: BUCHANON F/N 0625
16. GROUND LUG: BUCHANON F/N 824
17. NEUTRAL LUG: BUCHANON F/N 824
18. MAIN LOAD LUG: SQUARE D F/N U3
19. LABELS: ALL BREAKERS AND SWITCHES TO BE IDENTIFIED BY PERMANENTLY ATTACHED LABEL TO PANEL DOOR INTERIOR
20. MOUNTING SCREWS: STAINLESS STEEL 304
21. SCHEMATIC DWG.: PROTECTED BY PLASTIC COATING AND ATTACHED TO PANEL DOOR INTERIOR.
22. MANUFACTURER: STACON, ECS OR CITY OF DELAND APPROVAL.
23. R.T.U.: (DATA FLOW MELBOURNE FLA. (R.T.U. 204) OR EQUAL TO BE INSTALLED BY CITY- DEVELOPER TO BEAR ALL COSTS.
24. PROVIDE SFARE PARTS - SEE SPARE PARTS LIST
25. WET WELL TO BE COATED INSIDE AND OUT WITH MIN. 24 MILS OF COAL/TAR EPOXY
26. EQUIVALENT PRODUCTS CAN ONLY BE APPROVED UPON RECEIPT OF WRITTEN AUTHORIZATION FROM THE CITY OF DELAND.

ELECTRICAL SERVICE DATA STANDARD 2-PUMP WET WELL MOUNTED PUMP STATION

MAIN PUMP MOTOR SIZE	TOTAL STATION FULL LOAD AMPS		
RATED HP EACH	208 VOLT	230 VOLT	460 VOLT
1	17.6	15.3	7.6
1–1/2	21.8	18.9	9.5
2	25.9	22.5	11.3
3	33.1	28.8	14.5
5	47.7	41.4	20.7
7–1/2	65.3	56.7	28.4
10	80.8	70.2	35.1
15	117.0	101.7	50.9
20	148.1	128.7	64.4
25	190.44	160.2	80.1
30	215.3	187.2	93.6
40	---	---	120.6
50	---	---	150.0

ELECTRICAL SERVICE DATA STANDARD 3-PUMP WET WELL MOUNTED PUMP STATION

MAIN PUMP MOTOR SIZE	TOTAL STATION FULL LOAD AMPS		
RATED HP EACH	208 VOLT	230 VOLT	460 VOLT
1	27.3	23.7	11.9
1–1/2	33.3	28.9	14.5
2	39.3	34.1	17.1
3	49.6	43.2	21.6
5	70.6	61.4	30.7
7–1/2	96.1	83.5	41.8
10	118.5	103.0	51.5
15	170.9	148.5	74.3
20	215.7	187.5	93.8
25	---	---	116.5
30	---	---	136.0
40	---	---	175.0
50	---	---	217.3

Index No.
30800
REVISED 11/05/21
SHEET 3 OF 3

City of DeLand, Engineering Services
1102 S. Garfield Avenue, DeLand, Florida 32724

DATE: *11/05/2021*
CHECKED BY:
SCALE: *NOT TO SCALE*
DRAWN BY: *ERIC SAMPSON*

TITLE: *SANITARY LIFT STATION*

FILE: *LIFT_STATION_DETAILS_C_D.dwg*

3M LOCATING MARKER BALLS PROGRAMMABLE AND NON-PROGRAMMABLE NOTES:

- Programmable and Non-Programmable Marking Balls will be used on all Sewer, Potable and Reclaim projects
- For information on the Programmable and Non-Programmable Balls that the City requires see spec sheet for details
- Programmable Balls will be placed at all fittings ie. Tees, Couplings, 90, 45, and 22.
- Information will be recorded on a spread sheet. For information that needs to be recorded see spec sheet for an example template for the 3M Marker Balls
- Non-Programmable Marking Balls will used as follow:

- Potable: End of Service Line when buried
- Wastewater: Ball will be placed at the curb line to mark lateral location prior to end of service.
- Reclaim: End of Service Line when buried

- Desired bury depth is 1.5 feet to 3 feet. Five foot is the maximum depth for these devices

1420-LOCATER FOR MARKER BALLS

3M™ Dynatel™ Electronic Marker System (EMS) Marker Locators 1420 series is microprocessor-based systems that quickly and efficiently locate underground markers—years after construction or maintenance. -

The 3M™ Dynatel™ 1420 Marker Locators are designed to be accurate, fast and integrated allowing you to accurately and easily:

• Locate, read and write to 3M iD markers

• Pinpoint the depth and location of all existing models of properly installed underground passive EMS markers

• Conduct direct depth reading of markers

• Locate two different marker frequencies simultaneously

Specifications

2200RB Rechargeable Battery Not Included	2200RB Rechargeable Battery Not Included
Cable/Pipe Locate No	Cable/Pipe Locate No
Carrying Bag Included No	Carrying Bag Included No
Coupler Size No Coupler	Coupler Size No Coupler
Direct Connect Cable N/A	Direct Connect Cable N/A
EMS Caution Tape Finding Capability No	EMS Caution Tape Finding Capability No
Family 1420 Series	Family 1420 Series
Fault Finding Capability No	Fault Finding Capability No
	Locator Type Marker

3M DYNATEL LOCATING AND MARKING ELECTRONIC MARKER SYSTEM:

1423-XR/ID-POTABLE

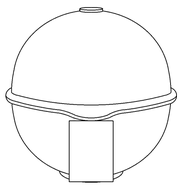

The 3M™ EMS Extended-Range Ball Markers have a self-leveling design providing accurate, horizontal position regardless of how it is placed in the ground, making the job of precisely locating underground facilities easier.

Featured Benefits

- Positive identification of underground water facilities
- iD Marker allows for programming of customer specific information
- Unique self leveling design simplifies installation
- No external power source needed
- Resistant to elements
- 5 foot (1.5 meter) detection distance
- Color conforms to APWA standards

SPECIFICATIONS:

COLOR:	BLUE
DIAMETER (METRIC):	10.4 CM
EMS CAUTION TAPE FINDING CAPABILITY:	N/A
MARKER DEPTH:	5 FEET (1.5M)
MARKER DIMENSION (INCH):	4 INCH DIAMETER
MARKER TYPE:	BALL
PROGRAMMABLE/PASSIVE:	PROGRAMMABLE
RANGE:	0 TO 5 LINEAR FOOT
RoHS 2011/65/EU Compliant:	UNDETERMINED
RoHS EU Comments:	CONTACT 3M FOR INFORMATION
Solution for:	ACCESS NETWORK: FTTH/FTTB/CATV
	ACCESS NETWORK: xDSL, LONG-HAUL/METRO
	LOOP NETWORK: OUTDOOR
	WIRELESS NETWORK: BACKHAUL

1424-XR/ID-SEWER

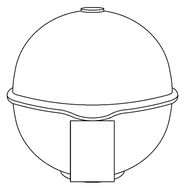

The 3M™ EMS Extended-Range Ball Markers have a self-leveling design providing accurate, horizontal position regardless of how it is placed in the ground, making the job of precisely locating underground facilities easier.

Featured Benefits

- Positive identification of underground wastewater facilities
- iD Marker allows for programming of customer specific information
- Unique self leveling design simplifies installation
- No external power source needed
- Resistant to elements
- 5 foot (1.5 meter) detection distance
- Color conforms to APWA standards

SPECIFICATIONS:

COLOR:	GREEN
DIAMETER (METRIC):	10.4 CM
EMS CAUTION TAPE FINDING CAPABILITY:	N/A
MARKER DEPTH:	5 FEET (1.5M)
MARKER DIMENSION (INCH):	4 INCH DIAMETER
MARKER TYPE:	BALL
NUMBER OF FREQUENCIES:	N/A
PROGRAMMABLE/PASSIVE:	PROGRAMMABLE
RANGE:	0 TO 5 LINEAR FOOT
RoHS 2011/65/EU Compliant:	UNDETERMINED
RoHS EU Comments:	CONTACT 3M FOR INFORMATION
Solution for:	ACCESS NETWORK: FTTH/FTTB/CATV
	ACCESS NETWORK: xDSL, LONG-HAUL/METRO
	LOOP NETWORK: OUTDOOR
	WIRELESS NETWORK: BACKHAUL

1428-XR/ID-RECLAIMED

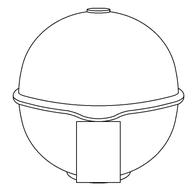

The 3M™ EMS Extended-Range Ball Markers have a self-leveling design providing accurate, horizontal position regardless of how it is placed in the ground, making the job of precisely locating underground facilities easier.

Featured Benefits

- Positive identification of underground general purpose / reclaimed water facilities
- iD Marker allows for programming of customer specific information
- Unique self leveling design simplifies installation
- No external power source needed
- Resistant to elements
- 5 foot (1.5 meter) detection distance
- Color conforms to APWA standards

SPECIFICATIONS:

COLOR:	PURPLE
DIAMETER (METRIC):	10.4 CM
EMS CAUTION TAPE FINDING CAPABILITY:	N/A
MARKER DEPTH:	5 FEET (1.5M)
MARKER DIMENSION (INCH):	4 INCH DIAMETER
MARKER TYPE:	BALL
NUMBER OF FREQUENCIES:	N/A
PROGRAMMABLE/PASSIVE:	PROGRAMMABLE
RANGE:	0 TO 5 LINEAR FOOT
RoHS 2011/65/EU Compliant:	UNDETERMINED
RoHS EU Comments:	CONTACT 3M FOR INFORMATION
Solution for:	ACCESS NETWORK: FTTH/FTTB/CATV
	ACCESS NETWORK: xDSL, LONG-HAUL/METRO
	LOOP NETWORK: OUTDOOR
	WIRELESS NETWORK: BACKHAUL

1403-XR-POTABLE

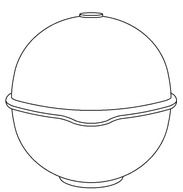

The 3M™ EMS Extended-Range Ball Markers have a self-leveling design providing accurate, horizontal position regardless of how it is placed in the ground, making the job of precisely locating underground facilities easier.

Featured Benefits

- Positive identification of underground water facilities
- Unique self leveling design simplifies installation
- No external power source needed
- Resistant to elements
- 5 foot (1.5 meter) detection distance
- Color conforms to APWA standards

SPECIFICATIONS:

COLOR:	BLUE
DIAMETER (METRIC):	10.4 CM
EMS CAUTION TAPE FINDING CAPABILITY:	N/A
MARKER DEPTH:	5 FEET (1.5M)
MARKER DIMENSION (INCH):	4 INCH DIAMETER
MARKER TYPE:	BALL
NUMBER OF FREQUENCIES:	N/A
PROGRAMMABLE/PASSIVE:	PASSIVE
RANGE:	0 TO 5 LINEAR FOOT
RoHS 2011/65/EU Compliant:	UNDETERMINED
RoHS EU Comments:	CONTACT 3M FOR INFORMATION
Solution for:	ACCESS NETWORK: FTTH/FTTB/CATV
	ACCESS NETWORK: xDSL, LONG-HAUL/METRO
	LOOP NETWORK: OUTDOOR
	WIRELESS NETWORK: BACKHAUL

1404-XR-SEWER

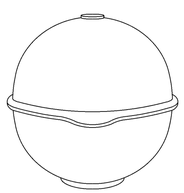

The 3M™ EMS Extended-Range Ball Markers have a self-leveling design providing accurate, horizontal position regardless of how it is placed in the ground, making the job of precisely locating underground facilities easier.

Featured Benefits

- Positive identification of underground wastewater facilities
- Unique self leveling design simplifies installation
- No external power source needed
- Resistant to elements
- 5 foot (1.5 meter) detection distance
- Color conforms to APWA standards

SPECIFICATIONS:

COLOR:	GREEN
DIAMETER (METRIC):	10.4 CM
EMS CAUTION TAPE FINDING CAPABILITY:	N/A
MARKER DEPTH:	5 FEET (1.5M)
MARKER DIMENSION (INCH):	4 INCH DIAMETER
MARKER TYPE:	BALL
NUMBER OF FREQUENCIES:	N/A
PROGRAMMABLE/PASSIVE:	PASSIVE
RANGE:	0 TO 5 LINEAR FOOT
RoHS 2011/65/EU Compliant:	UNDETERMINED
RoHS EU Comments:	CONTACT 3M FOR INFORMATION
Solution for:	ACCESS NETWORK: FTTH/FTTB/CATV
	ACCESS NETWORK: xDSL, LONG-HAUL/METRO
	LOOP NETWORK: OUTDOOR
	WIRELESS NETWORK: BACKHAUL

1408-XR-RECLAIMED

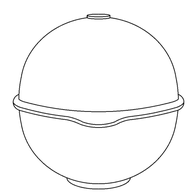

The 3M™ EMS Extended-Range Ball Markers have a self-leveling design providing accurate, horizontal position regardless of how it is placed in the ground, making the job of precisely locating underground facilities easier.

Featured Benefits

- Positive identification of underground general purpose facilities
- Unique self leveling design simplifies installation
- No external power source needed
- Resistant to elements
- 5 foot (1.5 meter) detection distance
- Color conforms to APWA standards

SPECIFICATIONS:

COLOR:	PURPLE
DIAMETER (METRIC):	10.4 CM
EMS CAUTION TAPE FINDING CAPABILITY:	N/A
MARKER DEPTH:	5 FEET (1.5M)
MARKER DIMENSION (INCH):	4 INCH DIAMETER
MARKER TYPE:	BALL
NUMBER OF FREQUENCIES:	N/A
PROGRAMMABLE/PASSIVE:	PASSIVE
RANGE:	0 TO 5 LINEAR FOOT
RoHS 2011/65/EU Compliant:	UNDETERMINED
RoHS EU Comments:	CONTACT 3M FOR INFORMATION
Solution for:	ACCESS NETWORK: FTTH/FTTB/CATV
	ACCESS NETWORK: xDSL, LONG-HAUL/METRO
	LOOP NETWORK: OUTDOOR
	WIRELESS NETWORK: BACKHAUL

CITY OF DELAND, FLORIDA
1102 S. GARFIELD AVENUE, DELAND, FLORIDA 32724

DATE: 11/05/2021
CHECKED BY: ERIC M. SAMPSON
SCALE: NOT TO SCALE
DRAWN BY: MARK LA GRECA

TITLE: UTILITY MARKER BALL LOCATERS

FILE: drive letter/details locations

NOTES:
1. WATER MAINS TO BE ON NORTH or EAST SIDE OF R.O.W., APPROX. 4 FT. BACK OF CURB UNLESS OTHERWISE AUTHORIZED BY CITY ENGINEER.
2. SERVICE CONNECTIONS TO BE 4 FT. FROM SIDE LOT LINE ON EITHER SIDE OF LOT. THESE SERVICES TO BE CONSISTENT WITHIN THE SUBDIVISION. DRIVEWAYS SHALL NOT BE BUILT OVER METERS.
3. ALL LINES SHALL BE CHLORINATED and PRESSURE TESTED (TEST FOR TWO HOURS @ 150 P.S.I.) UNDER THE DIRECTION OF THE UTILITIES DEPARTMENT, AFTER SUCCESSFUL COMPLETION OF THE TESTING and CHLORINATION, THE PRESSURE SHALL REMAIN ON THE SYSTEM AT ALL TIMES
4. TEN FT. SEPARATION REQUIRED BETWEEN PARALLEL WATER & SANITARY SEWER LINES.
5. SADDLE IS REQUIRED FOR ALL SERVICE CONNECTIONS TO 4" PVC MAINS. SADDLE IS REQUIRED FOR 2" SERVICE CONNECTIONS TO 6" and LARGER PVC MAINS. LARGEST SERVICE CONNECTION TO A 4" MAIN IS MIN. 1-1/2" and LARGEST TO ANY MAIN IS 2".
6. MINIMUM DISTANCE BETWEEN SERVICE TAPS TO BE NOT LESS THAN 36".
7. SINGLE SERVICE TAP SHALL BE 1".
8. DOUBLE SERVICE TAP SHALL BE 1-1/ 2".
9. ALL FITTINGS SHALL BE BRASS ONLY.
10. ALL CORPORATION STOPS, SHALL BE "FORD" OR "MUELLER" ONLY.
11. FREEZE PROTECTION VALVE, SHALL BE "CONBRACO" 40LF000FPV2F.
12. ALL 3/4", 1", 1-1/2", & 2" W.M., SHALL BE SDR 9, 200 psi, ASTMD 2737, (BLUE) POLYETHYLENE TUBING.
13. ALL BRASS FITTINGS SHALL BE LEAD FREE.
14. NO GALVANIZED FITTINGS CONNECTED TO BRASS FITTINGS.
15. PLANTINGS AND OBSTRUCTIONS SHOULD BE AVOIDED WITHIN 3 FT. RADIUS FOR SERVICE ACTIVITY.
16. METER BOX SHOULD HAVE A 2'X2'X6' CLEARANCE AROUND IT.

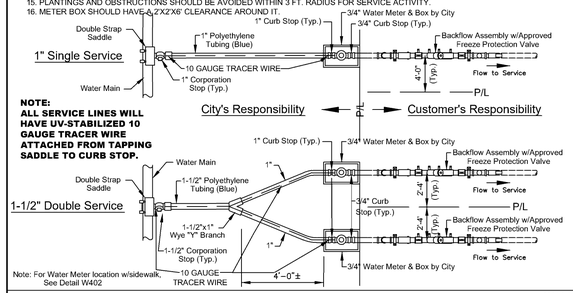

Note: For Water Meter location w/sidewalk, See Detail W402

NOTE:
ALL SERVICE LINES WILL HAVE UV-STABILIZED 10 GAUGE TRACER WIRE ATTACHED FROM TAPPING SADDLE TO CURB STOP.

DATE: 11/05/2021 **WATER MAIN SERVICE CONNECTION (BACKFLOW)** **W401**

City of DeLand - Standard Details

NOTES:
1. WATER MAINS TO BE ON NORTH or EAST SIDE OF R.O.W., APPROX. 4 FT. BACK OF CURB UNLESS OTHERWISE AUTHORIZED BY CITY ENGINEER.
2. SERVICE CONNECTIONS TO BE 4 FT. FROM SIDE LOT LINE ON EITHER SIDE OF LOT. THESE SERVICES TO BE CONSISTENT WITHIN THE SUBDIVISION. DRIVEWAYS SHALL NOT BE BUILT OVER METERS.
3. ALL LINES SHALL BE CHLORINATED and PRESSURE TESTED (TEST FOR TWO HOURS @ 150 P.S.I.) UNDER THE DIRECTION OF THE UTILITIES DEPARTMENT, AFTER SUCCESSFUL COMPLETION OF THE TESTING and CHLORINATION, THE PRESSURE SHALL REMAIN ON THE SYSTEM AT ALL TIMES
4. TEN FT. SEPARATION REQUIRED BETWEEN PARALLEL WATER & SANITARY SEWER LINES.
5. SADDLE IS REQUIRED FOR ALL SERVICE CONNECTIONS TO 4" PVC MAINS. SADDLE IS REQUIRED FOR 2" SERVICE CONNECTIONS TO 6" and LARGER PVC MAINS. LARGEST SERVICE CONNECTION TO A 4" MAIN IS MIN. 1-1/2" and LARGEST TO ANY MAIN IS 2".
6. MINIMUM DISTANCE BETWEEN SERVICE TAPS TO BE NOT LESS THAN 36".
7. SINGLE SERVICE TAP SHALL BE 1".
8. DOUBLE SERVICE TAP SHALL BE 1-1/ 2".
9. ALL FITTINGS SHALL BE BRASS ONLY.
10. ALL CORPORATION STOPS, SHALL BE "FORD" OR "MUELLER" ONLY.
11. FREEZE PROTECTION VALVE, SHALL BE "CONBRACO" 40LF000FPV2F.
12. ALL 3/4", 1", 1-1/2", & 2" W.M., SHALL BE SDR 9, 200 psi, ASTMD 2737, (BLUE) POLYETHYLENE TUBING.
13. ALL BRASS FITTINGS SHALL BE LEAD FREE.
14. NO GALVANIZED FITTINGS CONNECTED TO BRASS FITTINGS.
15. PLANTINGS AND OBSTRUCTIONS SHOULD BE AVOIDED WITHIN 3 FT. RADIUS FOR SERVICE ACTIVITY.
16. METER BOX SHOULD HAVE A 2'X2'X6' CLEARANCE AROUND IT.

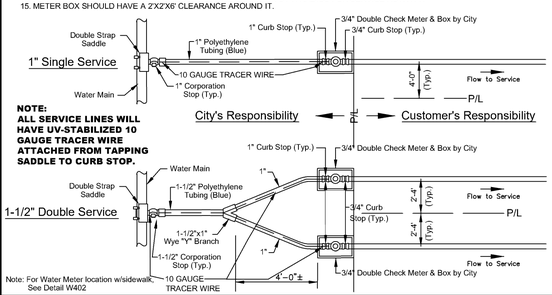

Note: For Water Meter location w/sidewalk, See Detail W402

NOTE:
ALL SERVICE LINES WILL HAVE UV-STABILIZED 10 GAUGE TRACER WIRE ATTACHED FROM TAPPING SADDLE TO CURB STOP.

DATE: 11/05/2021 **WATER MAIN SERVICE CONNECTION (DOUBLE CHECK METER)** **W401A**

City of DeLand - Standard Details

NOTES:
1. WATER MAINS TO BE ON NORTH or EAST SIDE OF R.O.W., APPROX. 4 FT. BACK OF CURB UNLESS OTHERWISE AUTHORIZED BY CITY ENGINEER.
2. SERVICE CONNECTIONS TO BE 4 FT. FROM SIDE LOT LINE ON EITHER SIDE OF LOT. THESE SERVICES TO BE CONSISTENT WITHIN THE SUBDIVISION. DRIVEWAYS SHALL NOT BE BUILT OVER METERS.
3. ALL LINES SHALL BE CHLORINATED and PRESSURE TESTED (TEST FOR TWO HOURS @ 150 P.S.I.) UNDER THE DIRECTION OF THE UTILITIES DEPARTMENT, AFTER SUCCESSFUL COMPLETION OF THE TESTING and CHLORINATION, THE PRESSURE SHALL REMAIN ON THE SYSTEM AT ALL TIMES
4. TEN FT. SEPARATION REQUIRED BETWEEN PARALLEL WATER & SANITARY SEWER LINES.
5. SADDLE IS REQUIRED FOR ALL SERVICE CONNECTIONS TO 4" PVC MAINS. SADDLE IS REQUIRED FOR 2" SERVICE CONNECTIONS TO 6" and LARGER PVC MAINS. LARGEST SERVICE CONNECTION TO A 4" MAIN IS MIN. 1-1/2" and LARGEST TO ANY MAIN IS 2".
6. MINIMUM DISTANCE BETWEEN SERVICE TAPS TO BE NOT LESS THAN 36".
7. SINGLE SERVICE TAP SHALL BE 1".
8. DOUBLE SERVICE TAP SHALL BE 1-1/ 2".
9. ALL FITTINGS SHALL BE BRASS ONLY.
10. ALL CORPORATION STOPS, SHALL BE "FORD" OR "MUELLER" ONLY.
11. FREEZE PROTECTION VALVE, SHALL BE "CONBRACO" 40LF000FPV2F.
12. ALL 3/4", 1", 1-1/2", & 2" W.M., SHALL BE SDR 9, 200 psi, ASTMD 2737, (BLUE) POLYETHYLENE TUBING.
13. ALL BRASS FITTINGS SHALL BE LEAD FREE.
14. NO GALVANIZED FITTINGS CONNECTED TO BRASS FITTINGS.
15. METER BOX SHOULD HAVE A 2'X2'X6' CLEARANCE AROUND IT.

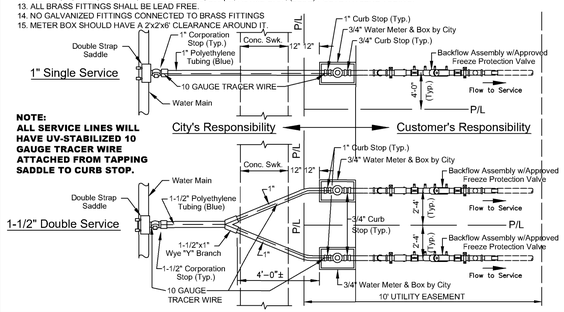

NOTE:
ALL SERVICE LINES WILL HAVE UV-STABILIZED 10 GAUGE TRACER WIRE ATTACHED FROM TAPPING SADDLE TO CURB STOP.

DATE: 11/05/2021 **WATER MAIN SERVICE CONNECTION WITH SIDEWALK (BACKFLOW)** **W402**

City of DeLand - Standard Details

NOTES:
1. WATER MAINS TO BE ON NORTH or EAST SIDE OF R.O.W., APPROX. 4 FT. BACK OF CURB UNLESS OTHERWISE AUTHORIZED BY CITY ENGINEER.
2. SERVICE CONNECTIONS TO BE 4 FT. FROM SIDE LOT LINE ON EITHER SIDE OF LOT. THESE SERVICES TO BE CONSISTENT WITHIN THE SUBDIVISION. DRIVEWAYS SHALL NOT BE BUILT OVER METERS.
3. ALL LINES SHALL BE CHLORINATED and PRESSURE TESTED (TEST FOR TWO HOURS @ 150 P.S.I.) UNDER THE DIRECTION OF THE UTILITIES DEPARTMENT, AFTER SUCCESSFUL COMPLETION OF THE TESTING and CHLORINATION, THE PRESSURE SHALL REMAIN ON THE SYSTEM AT ALL TIMES
4. TEN FT. SEPARATION REQUIRED BETWEEN PARALLEL WATER & SANITARY SEWER LINES.
5. SADDLE IS REQUIRED FOR ALL SERVICE CONNECTIONS TO 4" PVC MAINS. SADDLE IS REQUIRED FOR 2" SERVICE CONNECTIONS TO 6" and LARGER PVC MAINS. LARGEST SERVICE CONNECTION TO A 4" MAIN IS MIN. 1-1/2" and LARGEST TO ANY MAIN IS 2".
6. MINIMUM DISTANCE BETWEEN SERVICE TAPS TO BE NOT LESS THAN 36".
7. SINGLE SERVICE TAP SHALL BE 1".
8. DOUBLE SERVICE TAP SHALL BE 1-1/ 2".
9. ALL FITTINGS SHALL BE BRASS ONLY.
10. ALL CORPORATION STOPS, SHALL BE "FORD" OR "MUELLER" ONLY.
11. FREEZE PROTECTION VALVE, SHALL BE "CONBRACO" 40LF000FPV2F.
12. ALL 3/4", 1", 1-1/2", & 2" W.M., SHALL BE SDR 9, 200 psi, ASTMD 2737, (BLUE) POLYETHYLENE TUBING.
13. ALL BRASS FITTINGS SHALL BE LEAD FREE.
14. NO GALVANIZED FITTINGS CONNECTED TO BRASS FITTINGS
15. METER BOX SHOULD HAVE A 2'X2'X6' CLEARANCE AROUND IT.

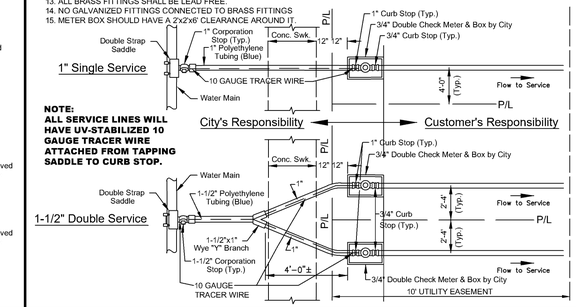

NOTE:
ALL SERVICE LINES WILL HAVE UV-STABILIZED 10 GAUGE TRACER WIRE ATTACHED FROM TAPPING SADDLE TO CURB STOP.

DATE: 11/05/2021 **WATER MAIN SERVICE CONN. WITH SIDEWALK (DBL. CHECK METER)** **W402A**

City of DeLand - Standard Details

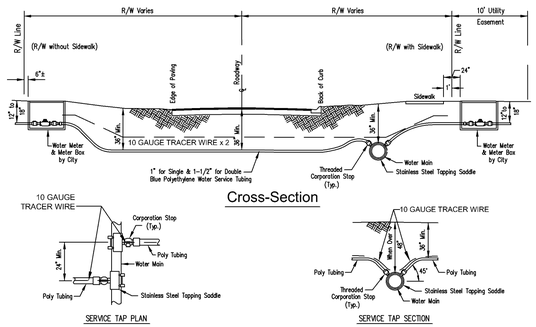

NOTES:
1. SINGLE WATER SERVICE SHALL BE, 1" POLYETHYLENE TUBING (BLUE).
2. DOUBLE WATER SERVICE SHALL BE, 1-1/2" POLYETHYLENE TUBING (BLUE).
3. WATER MAINS TO BE MIN. 36" BELOW GRADE and APPROX. 4' BACK OF CURB.
4. CURB STOP TO BE LOCATED APPROX. 2 FOOT BACK OF RIGHT-OF-WAY AND MUST HAVE LOCK WING.
5. SERVICE LINE TO BE MIN. 36" BELOW GRADE IN RIGHT-OF-WAY.
6. ALL 3/4", 1", 1-1/2" & 2" W.M., SHALL BE SDR 9, 200 psi, ASTMD 2737, (BLUE) POLYETHYLENE TUBING.
7. ALL TRACER WIRE SHALL BE (BLUE) UV-STABILIZED 10 GAUGE. DIRECTIONAL BORES REQUIRED TO HAVE TWO 10 GAUGE WIRES THAT ARE PULLED WITH DIRECTIONAL DRILL. OPEN CUT MAY USE ONLY ONE 10 GAUGE WIRE.
8. ALL SERVICE TAPS TO MEET AWWA STANDARD 45° FROM HORIZONTAL UNLESS PRIOR AUTHORIZATION RECEIVED FROM CITY.
9. ALL SERVICE LINES WILL HAVE TRACER WIRE ATTACHED FROM TAPPING SADDLE TO CURB STOP.

DATE: 11/05/2021 **WATER MAIN SERVICE LINES** **W403**

City of DeLand - Standard Details

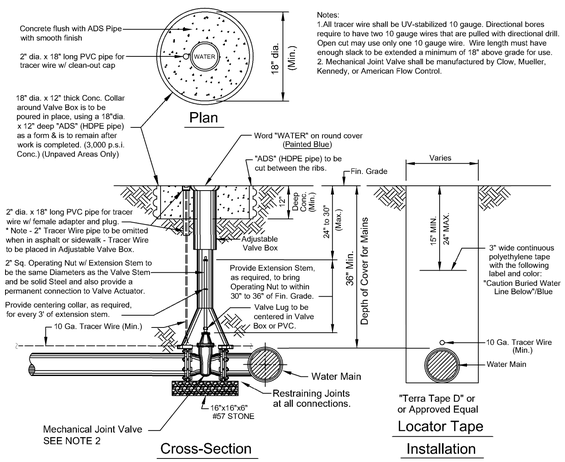

Notes:
1.All tracer wire shall be UV-stabilized 10 gauge. Directional bores require to have two 10 gauge wires that are pulled with directional drill. Open cut may use only one 10 gauge wire. Wire length must have enough slack to be extended a minimum of 18" above grade for use.
2. Mechanical Joint Valve shall be manufactured by Clow, Mueller, Kennedy, or American Flow Control.

DATE: 11/05/2021 **WATER MAIN VALVE SETTING** **W404**

City of Deland - Standard Details

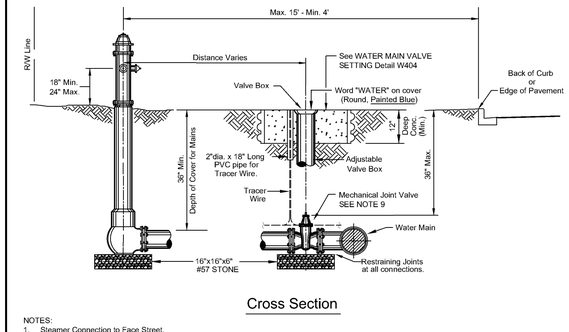

NOTES:
1. Steamer Connection to Face Street.
2. All Fire Hydrants to have 5 1/4" Valve Seat.
3. Fire Hydrants Shall be Placed at Street Corners or in the R.O.W. Adjacent to Side Lot Lines Whenever Possible.
4. See Detail W406 for Typical Connections & Fittings.
5. Fire Hydrants Shall be Painted City Safety Yellow w/Richards Paint No. 1009, Rust Shield Polyurethane.
6. Remove Chains from Cap.
7. Min. 3 ft. Clearance Should be Maintained Around Fire Hydrant for Emergency Operation Purposes.
8. All tracer wire shall be UV-stabilized 10 gauge. Directional bores require to have two 10 gauge wires that are pulled with directional drill. Open cut may use only one 10 gauge wire.
9. Mechanical Joint Valve shall be manufactured by Clow, Mueller, Kennedy, or American Flow Control.

ONLY APPROVED CITY FIRE HYDRANTS
— Mueller Super Centurion 200
— Clow Medallion

See W406 for Plan View

DATE: 11/05/2021 **FIRE HYDRANT SETTING SECTION** **W405**

City of DeLand -Standard Details

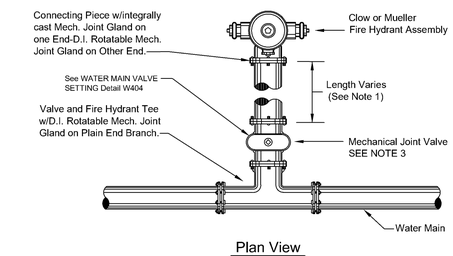

NOTES:
1. On Fire Hydrants Requiring Runout Last Two Joints Must Be Restrained Per Detail W409.
2. Fire Hydrants Should Have a 2'x2'x6' Clearance Around it.
3. Mechanical Joint Valve shall be manufactured by Clow, Mueller, Kennedy, or American Flow Control.

ONLY APPROVED CITY FIRE HYDRANTS
— Mueller Super Centurion 200
— Clow Medallion

See W405 for Cross Section

DATE: 11/05/2021 **FIRE HYDRANT SETTING PLAN** **W406**

City of DeLand - Standard Details

Notes:
1. All tracer wire shall be UV-stabilized 10 gauge. Directional bores require to have two 10 gauge wires that are pulled with directional drill. Open cut may use only one 10 gauge wire.

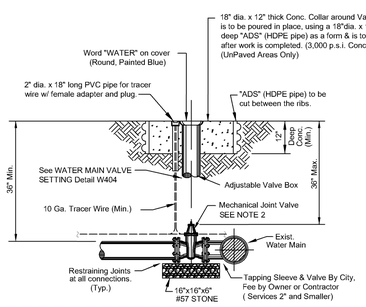

Notes:
1. For Wet Taps larger than 2", Sleeves & Valves will be furnished and installed by the contractor in the presence of the city inspector. Tapping sleeve shall be Ford, Romac, or JCM stainless steel only.
2. Mechanical Joint Valve shall be manufactured by Clow, Mueller, Kennedy, or American Flow Control.

DATE: 11/05/2021 **TAPPING SLEEVE & VALVE** **W407**

City of DeLand - Standard Details

THE FOLLOWING JOINTS MUST BE RESTRAINED IN ALL APPLICATIONS:
1. BEND - INLET AND OUTLET
2. TEE - OUTLET BRANCH
3. OFFSETS - INLET AND OUTLET
4. CAPS
5. PLUGS
6. LAST TWO(2) JOINTS ON A DEAD END RUN (min. 36')
7. LAST TWO(2) JOINTS ON A HYDRANT RUNOUT (min. 36')

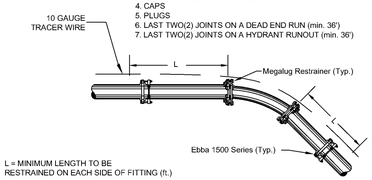

L = MINIMUM LENGTH TO BE RESTRAINED ON EACH SIDE OF FITTING (ft.)

NOM. PIPE SIZE	ELBOWS (deg.)				VALVE TEES
	11.25	22.50	45	90	
4	3	5	8	12	9
6	4	6	10	15	11
8	4	7	13	20	14
10	5	9	15	25	18
12	6	10	17	29	21
14	6	13	26	61	30
16	7	14	28	67	49
18	8	15	31	73	68
20	8	16	33	80	85

NOTE: THRUST RESTRAINT AT FITTINGS AND VALVES SHALL BE BY USE OF EBBA IRON MEGALUG RESTRAINERS. THRUST RESTRAINT BETWEEN PIPE JOINTS SHALL BE BY EBBA IRON SERIES 1500 RESTRAINERS.

DATE: 11/05/2021 **THRUST RESTRAINING DETAIL FOR PVC PIPE** **W408**

City of DeLand - Standard Details

THE FOLLOWING JOINTS MUST BE RESTRAINED IN ALL APPLICATIONS:
1. BEND - INLET AND OUTLET
2. TEE - OUTLET BRANCH
3. OFFSETS - INLET AND OUTLET
4. CAPS
5. PLUGS
6. LAST TWO(2) JOINTS ON A DEAD END RUN (min. 36')
7. LAST TWO(2) JOINTS ON A HYDRANT RUNOUT (min. 36')

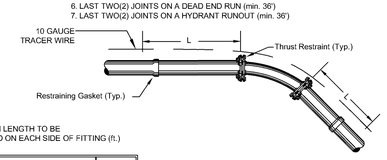

L = MINIMUM LENGTH TO BE RESTRAINED ON EACH SIDE OF FITTING (ft.)

NOM. PIPE SIZE	ELBOWS (deg.)				VALVE TEES
	11.25	22.50	45	90	
4	3	5	8	12	9
6	4	6	10	15	11
8	4	7	13	20	14
10	5	9	15	25	18
12	6	10	17	29	21
16	6	13	26	63	70
18	9	17	36	86	88
20	10	19	39	94	108
24	11	22	45	109	145

NOTE: THRUST RESTRAINT ON SLIPJOINT DUCTILE IRON PIPE SHALL BE U.S. PIPE FIELD LOCK GASKETS FOR TYTON JOINT PIPE or AMERICAN FAST-GRIP GASKETS FOR AMERICAN FASTITE PIPE. THRUST RESTRAINT ON DUCTILE IRON FITTINGS SHALL BE PROVIDED BY THE USE OF MEGALUG RETAINERS AND MECHANICAL JOINT FITTINGS.

DATE: 11/05/2021 **THRUST RESTRAINING DETAIL FOR DUCTILE IRON PIPE** **W409**

City of DeLand - Standard Details

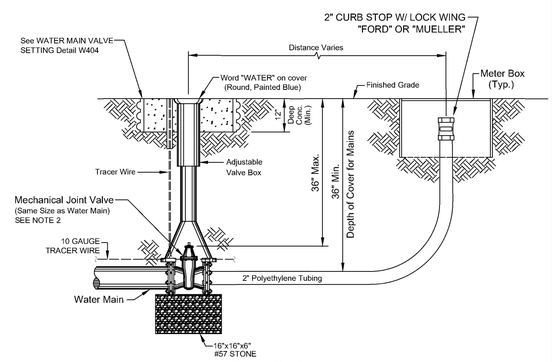

Notes:
1. All tracer wire shall be UV-stabilized 10 gauge. Directional bores require to have two 10 gauge wires that are pulled with directional drill. Open cut may use only one 10 gauge wire.
2. Mechanical Joint Valve shall be manufactured by Clow, Mueller, Kennedy, or American Flow Control.

DATE: 11/05/2021 **WATER MAIN BLOWOFF DETAIL** **W410**

City of DeLand - Standard Details

CITY OF DELAND, FLORIDA
1102 S. GARFIELD AVENUE, DELAND, FLORIDA 32724

DATE: 11/05/2021
CHECKED BY: NAME
NOT TO SCALE
ERIC SAMPSON

TITLE: WATER SYSTEM DETAILS (Sheet 1)

FILE: drive letter/details locations

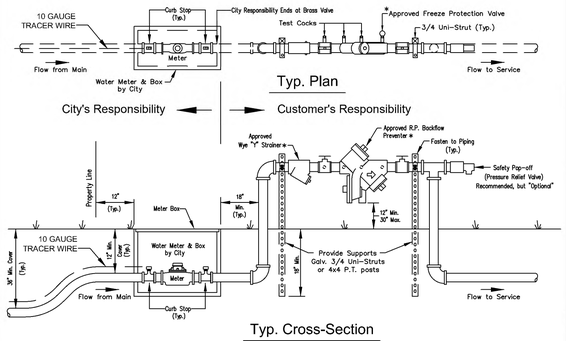

NOTES:
1. Installation Requirements: Above Ground Piping & Fittings shall be Copper or Brass Only (No PVC).
2. Device shall be Properly Supported.
3. Device shall be Protected from Freezing.
4. Freeze protection valve shall be "CONBRACO" 40LF000FPV2F.
5. Device shall be Installed Level, Tested and Certified.
6. Certification of testing shall be placed in Permit Box for inspector's verification.
7. All fittings shall be Lead Free.
8. All corporation stops, shall be "Ford" or "Mueller" only.
9. All installations shall be Approved by the City Inspector.
10. All tracer wire shall be UV-stabilized 10 gauge. Directional bores require to have two 10 gauge wires that are pulled with directional drill. Open cut may use only one 10 gauge wire.

*APPROVED REDUCED PRESSURE DEVICE
"Wilkins" 975XL2
"Watts" LF919-QT

*APPROVED FREEZE PROTECTION VALVE
"Conbraco" (Apollo) 40LF000FPV2F

*APPROVED WYE "Y" STRAINER
"Conbraco" (Apollo) #YB34LF, #YB1LF, #YB114LF, #YB112LF, #YB2LF

DATE: 11/05/2021 **WATER METER & BACKFLOW ASSEMBLY - 1" THRU 2-1/2" MODELS** **W411**

City of DeLand - Standard Details

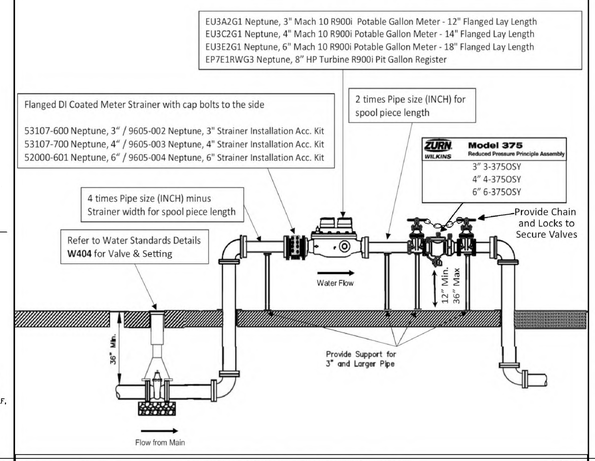

DATE: 11/05/2021 **3" AND ABOVE POTABLE WATER METER SET** **W412**

City of DeLand - Standard Details

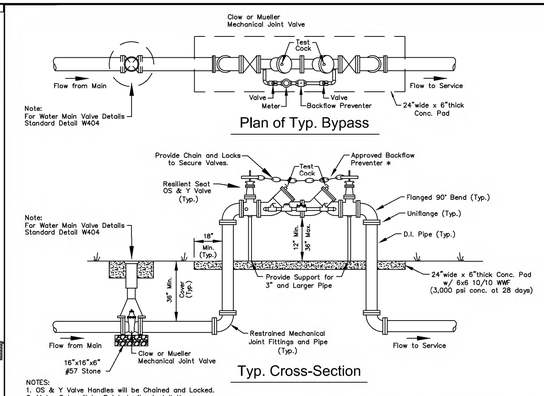

NOTES:
1. OS & Y Valve Handles will be Chained and Locked.
2. Meter Sets will be Pointed after Installation.
3. Bypass Pipe & Fittings shall be Threaded Brass, Copper or Ductile Iron. (No PVC).
4. Installation Requirements: No P.V.C. Piping above Ground.
5. Device shall be Properly Supported.
6. Device shall be Protected from Freezing.
7. All Installations shall be Approved by City Engineer.
8. Device shall be Installed Level, Tested and Certified.
9. Certification of testing shall be placed in Permit Box for Inspector's verification.
9. Consult local Fire Authority for location site & requirements for Fire Dept. connections.
10. All fittings shall be Lead Free.
11. All concrete shall have a minimum strength of 3,000 psi at 28 days.

*APPROVED R.P. DEVICES
Wilkins 975XL2
Watts Model LF909 or LF009
Conbraco 40LF-200-03

*APPROVED DOUBLE-CHECK VALVES
Wilkins 350A
Watts Model LF709 or LF007
Conbraco 40LF-100-03

DATE: 11/05/2021 **DOUBLE DETECTOR CHECK VALVE ASSEMBLY - 4" THRU 12"** **W413**

City of DeLand - Standard Details

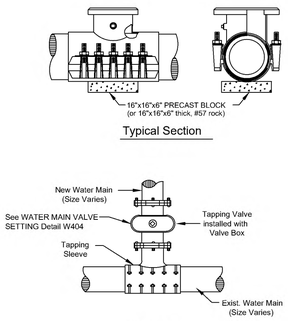

NOTES:
1. ALL TAPPING SLEEVES ABOVE 2" IN DIA. SHALL BE STAINLESS STEEL ONLY.
2. INSTALL REQUIRED RESTRAINED JOINTS. IN NO INSTANCE SHALL THRUST BLOCKS BE PERMITTED.
3. ONLY ROMAC INDUSTRIES, FORD STAINLESS STEEL OR JCM STAINLESS STEEL TAPPING SLEEVES ARE TO BE USED.
4. IN NEW CONSTRUCTION, ALL SADDLES, SLEEVES, VALVES, CORPORATION & CURB STOPS, TUBING WILL BE FURNISHED BY THE CONTRACTOR.

DATE: 11/05/2021 **STAINLESS STEEL TAPPING SLEEVE** **W414**

City of DeLand - Standard Details

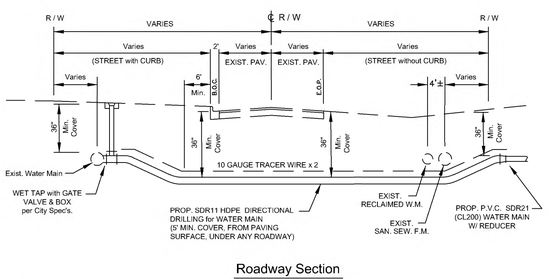

Notes:
1. Directional bores from 1-3 inches diameter must be a minimum of 36 inches in depth below edge of pavement.
2. Directional bores, 4 inches or greater, must be 10 times the diameter of the bore/backreamer, whichever diameter is greater, in depth, below edge of pavement and to extend a minimum of 6 feet beyond the edge of pavement, either side.
3. Any/All directional bore affiliated drill mud/slurry must be cleaned/reclaimed from right of way/bore pits and disposed of on approved off-site location.
4. All tracer wire shall be UV-stabilized 10 gauge. Directional bores require to have two 10 gauge wires that are pulled with directional drill. Open cut may use only one 10 gauge wire.

NOTE:
Tie Exist. Water Service Lines into New Water Main as per City Specifications.

DATE: 11/05/2021 **DIRECTIONAL BORE** **W415**

City of DeLand - Standard Details

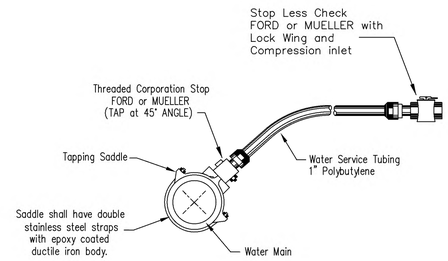

DATE: 11/05/2021 **CHLORINATION TAP** **W416**

City of DeLand - Standard Details

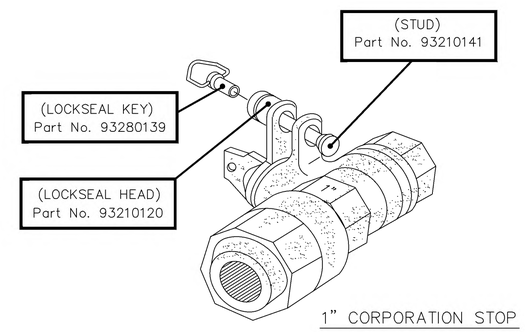

NOTE:
ALL SERVICE LINE WHIPS SHALL BE BULLET LOCKED ***OFF*** BY THE CONTRACTOR AFTER INSTALLATION AND SAMPLING HAVE BEEN COMPLETED

Manufacturer:
"FIROMATIC LOCKSEAL"

DATE: 11/05/2021 **WATER METER LOCKSEAL ASSEMBLY** **W418**

City of DeLand - Standard Details

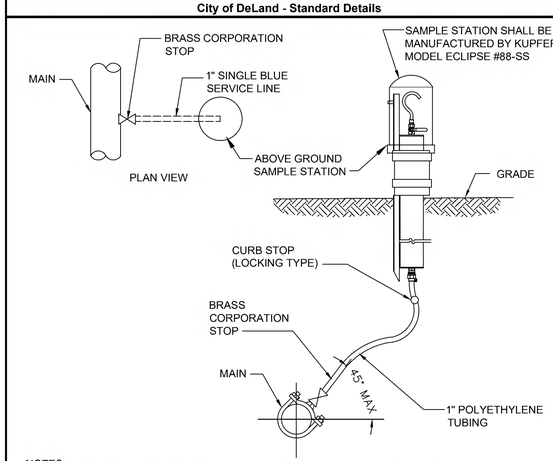

NOTES:
1. A 1 INCH SAMPLE STATION INSTALLED AT THE END OF A CUL-DE-SAC CAN ALSO SERVE AS A BLOW -OFF VALVE WHEN BOTH ARE REQUIRED.

DATE: 11/05/2021 **WATER SAMPLE STATION** **W419**

City of DeLand - Standard Details

LOCATION OF PUBLIC WATER SYSTEM MAINS IN ACCORDANCE WITH F.A.C. RULE 62-555.314

Other pipe	Horizontal Separation	Crossings (1)	Joint Spacing @ Crossing (Full Joint Centered)
Storm Sewer Stormwater Force Main, Reclaimed Water (2)	WATER MAIN 3 ft. minimum	WATER MAIN 12 inches is the minimum except for storm sewer,then 6 inches is the minimum and 12 inches is preferred	Alternate 3' ft. minimum WATER MAIN
Vacuum Sanitary Sewer	WATER MAIN 10 ft. preferred 3 ft. minimum	WATER MAIN 12 inches preferred 6 inches minimum	Alternate 3' ft. minimum WATER MAIN
Gravity Sewer Sanitary Sewer, Sanitary Sewer Force Main, Reclaimed Water (4)	WATER MAIN 10 ft. preferred 6 ft. minimum (3)	WATER MAIN 12 inches is the minimum except for gravity sewer,then 6 inches is the minimum and 12 inches is preferred	Alternate 6' ft. minimum WATER MAIN
On-Site Sewage Treatment & Disposal System(4)	10 ft minimum	---	---

(1) Water Main Should Cross Above other pipe. When Water Main Must Be Below Other Pipe,the Minimum Separation is 12" inches.
(2) Reclaimed Water Regulated Under Part III of chapter 62-610, F.A.C.
(3) 3 ft. for Gravity Sanitary sewer where the Bottom of the Water Main is laid at least 6 inches above the top of gravity sanitary sewer.
(4) Reclaimed water not regulated under Part III of Chapter 62-160, F.A.C.

DATE: 11/05/2021 **WATER PIPE SEPERATION REQUIREMENTS** **W420**

City of DeLand - Standard Details

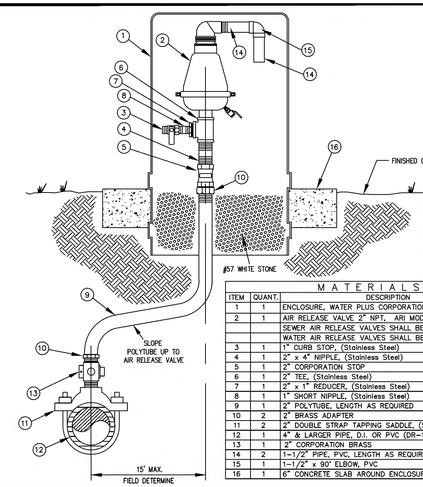

NOTE: (1) VENTED ENCLOSURE TO BE COLOR CODED AS FOLLOWS:
WATER MAIN - BLUE
FORCE MAIN - GREEN
REUSE MAIN - PURPLE (PANTONE 522C)

MATERIALS

ITEM	QUANT.	DESCRIPTION
1	1	ENCLOSURE, WATER PLUS CORPORATION MODEL #131632
2	1	AIR RELEASE VALVE 2" NPT, ARI MODEL D-025 P SEWER AIR RELEASE VALVES SHALL BE ARI MODEL D-025 P WATER AIR RELEASE VALVES SHALL BE VALMATIC OR EQUAL
3	1	1" CURB STOP, (Stainless Steel)
4	1	2" x 4" NIPPLE, (Stainless Steel)
5	1	2" CORPORATION STOP
6	1	2" TEE, (Stainless Steel)
7	1	2" x 1" REDUCER, (Stainless Steel)
8	1	1" SHORT NIPPLE, (Stainless Steel)
9	1	2" POLYTUBE, LENGTH AS REQUIRED
10	2	2" BRASS ADAPTER
11	2	2" DOUBLE STRAP TAPPING SADDLE, (Stainless Steel)
12	1	4" & LARGER PIPE, D.I. OR PVC (DR-18)
13	1	2" CORPORATION BRASS
14	2	1-1/2" PIPE, PVC, LENGTH AS REQUIRED
15	1	1-1/2" x 90° ELBOW, PVC
16	1	6" CONCRETE SLAB AROUND ENCLOSURE

DATE: 11/05/2021 **OFFSET AIR RELEASE VALVE** **W421**

City of DeLand - Standard Details

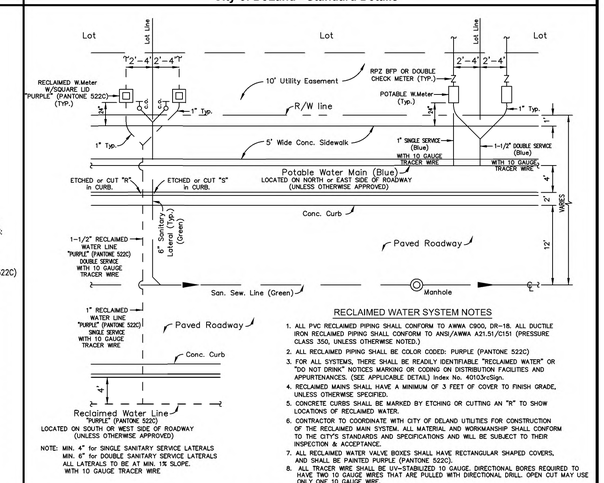

RECLAIMED WATER SYSTEM NOTES
1. ALL PVC RECLAIMED PIPING SHALL CONFORM TO AWWA C900, DR-18; ALL DUCTILE IRON RECLAIMED PIPING SHALL CONFORM TO ANSI/AWWA A21.51/C151 (PRESSURE CLASS 350, UNLESS OTHERWISE NOTED.)
2. ALL RECLAIMED PIPING SHALL BE COLOR CODED: PURPLE (PANTONE 522C)
3. FOR ALL SYSTEMS, THERE SHALL BE READILY IDENTIFIABLE "RECLAIMED WATER" OR "DO NOT DRINK" NOTICES MARKING OR CODING ON DISTRIBUTION FACILITIES AND APPURTENANCES. (SEE APPLICABLE DETAIL) Index No. 4010Sx-Sign.
4. RECLAIMED MAINS SHALL HAVE A MINIMUM OF 3 FEET OF COVER TO FINISH GRADE, UNLESS OTHERWISE SPECIFIED.
5. CONCRETE CURBS SHALL BE MARKED BY ETCHING OR CUTTING AN "R" TO SHOW LOCATIONS OF RECLAIMED WATER.
6. CONTRACTOR TO COORDINATE WITH CITY OF DELAND UTILITIES FOR CONSTRUCTION OF THE RECLAIMED MAIN SYSTEM. ALL MATERIAL AND WORKMANSHIP SHALL CONFORM TO THE CITY'S STANDARDS AND SPECIFICATIONS AND WILL BE SUBJECT TO THEIR INSPECTION & ACCEPTANCE.
7. ALL RECLAIMED WATER VALVE BOXES SHALL HAVE RECTANGULAR SHAPED COVERS, AND SHALL BE PAINTED PURPLE (PANTONE 522C).
8. ALL TRACER WIRE SHALL BE UV-STABILIZED 10 GAUGE. DIRECTIONAL BORES REQUIRED TO HAVE TWO 10 GAUGE WIRES THAT ARE PULLED WITH DIRECTIONAL DRILL. OPEN CUT MAY USE ONLY ONE 10 GAUGE WIRE.

DATE: 11/05/2021 **RESIDENTIAL UTILITY LAYOUT** **W422**

City of DeLand - Standard Details

CITY OF DELAND, FLORIDA
1102 S. GARFIELD AVENUE, DELAND, FLORIDA 32724

DATE: 11/05/2021
CHECKED BY: NAME
SCALE: NOT TO SCALE
DRAWN BY: ERIC SAMPSON

TITLE: WATER SYSTEM DETAILS (Sheet 2)

FILE: drive letter/details locations

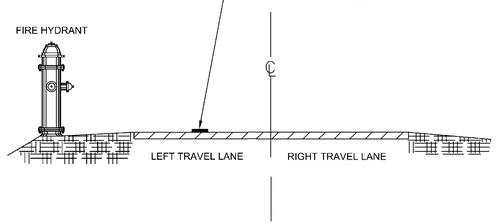

DATE: 11/05/2021 **REFLECTIVE PAVEMENT MARKER FOR FIRE HYDRANT LOCATION** W423

City of DeLand - Standard Details

Approved Ford Valve for Service Lines

1" SERVICE

Pack Joint for Copper or Plastic Tubing (CTS) Inlet by Meter Swivel Nut

Catalog Number	Description: Valve Size	Description: Serv. Line Size	Description: Meter Size	Approx. Wt. Lbs.
B43-211W-NL	5/8"	1/2"	5/8"	1.4
B43-212W-NL	5/8"	1/2"	5/8"x3/4" & 3/4"	1.5
►♦ B43-231W-NL	5/8"	3/4"	5/8"	1.6
►♦ B43-232W-NL	5/8"	3/4"	5/8"x3/4" & 3/4"	1.7
► B43-331W-NL	3/4"	3/4"	5/8"	2.1
►♦ B43-332W-NL	3/4"	3/4"	5/8"x3/4" & 3/4"	2.4
►♦ B43-334W-NL	3/4"	3/4"	1"	2.3
► B43-341W-NL	3/4"	1"	5/8"	2.7
►♦ B43-342W-NL	3/4"	1"	5/8"x3/4" & 3/4"	2.4
►♦ B43-344W-NL	3/4"	1"	1"	2.7
►♦ B43-444W-NL	1"	1"	1"	3.2
B43-454W-NL	1"	1-1/4"	1"	3.4

2" SERVICE

Pack Joint for Copper or Plastic Tubing (CTS) by Female Iron Pipe Thread

Catalog Number	Valve Size	CTS End	FIP End	Approx. Wt. Lbs.
►♦ * B41-333-NL	3/4"	3/4"	3/4"	2.0
►♦ B41-334-NL	3/4"	3/4"	1"	2.1
►♦ B41-343-NL	3/4"	1"	3/4"	2.2
►♦ B41-344-NL	3/4"	1"	1"	2.4
♦ BL41-344-4-875-NL	3/4"	1"	1"	3.1
►♦ * B41-444-NL	1"	1"	1"	2.8
♦ B41-454-NL	1"	1-1/4"	1"	3.2
♦ B41-455-NL	1"	1-1/4"	1-1/4"	3.7
♦ B41-555-NL	1-1/4"	1-1/4"	1-1/4"	5.6
♦ **B41-666-NL	1-1/2"	1-1/2"	1-1/2"	7.0
B41-677-NL	1-1/2"	2"	2"	9.6
♦ **B41-777-NL	2"	2"	2"	11.1

DATE: 11/05/2021 **VALVE FOR WATER AND RECLAIM SERVICE LINE** W424

City of DeLand - Standard Details

Approved Muller Valve for Service Lines

1" SERVICE

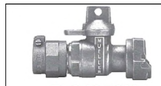

P-24350N

Mueller 300 Ball Straight Meter Valve
Mueller Pack Joint Connection for CTS O.D.* tubing x meter swivel nut**.
Quarter turn check - lock wing. 360° turn option available by adding -3 suffix to catalog number.
Example: P-24350-3

Catalog size	3/4"x5/8" R †	3/4" R †	3/4"	5/8"x3/4"x1"	1" R †	1"
Meter size	5/8"	5/8"x3/4", 3/4"	5/8"x3/4", 3/4"	5/8"x3/4", 3/4"	1"	1"
Tubing size	3/4"	3/4"	3/4"	1"	1"	1"

2" SERVICE

P-25172N

Mueller 300 Ball Curb Valve
Inlet: Mueller Pack Joint Connection for CTS O.D.* tubing
Outlet: F.I.P. thread
Quarter turn check-this valve may be ordered with 360° turn option by adding -3 to end of catalog number (P-25172-3)

3/4"R	3/4"	1"R	1"	1-1/2"	2"

DATE: 11/05/2021 **VALVE FOR WATER AND RECLAIM SERVICE LINE** W425

City of DeLand - Standard Details

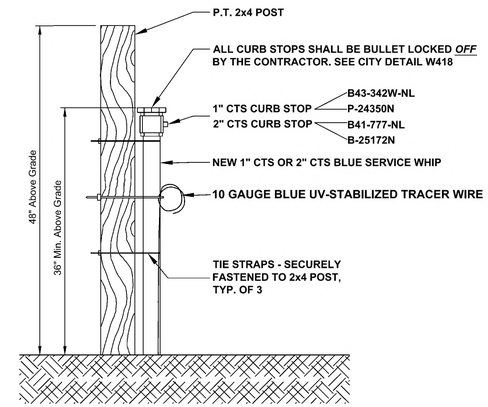

DATE: 11/05/2021 **NEW POTABLE SERVICE WHIP** W426

City of DeLand - Standard Details

CITY OF DELAND, FLORIDA
1102 S. GARFIELD AVENUE, DELAND, FLORIDA 32724

DATE: 11/05/2021
CHECKED BY: NAME
SCALE: NOT TO SCALE
DRAWN BY: ERIC SAMPSON

TITLE: WATER SYSTEM DETAILS (Sheet 3)

FILE: drive letter/details locations

NOTES:
1. WATER MAINS TO BE ON NORTH or EAST SIDE OF R.O.W., APPROX. 4 FT. BACK OF CURB UNLESS OTHERWISE AUTHORIZED BY CITY ENGINEER.
2. SERVICE CONNECTIONS TO BE 4 FT. FROM SIDE LOT LINE ON EITHER SIDE OF LOT. THESE SERVICES TO BE CONSISTENT WITHIN THE SUBDIVISION. DRIVEWAYS SHALL NOT BE BUILT OVER METERS.
3. ALL LINES SHALL BE CHLORINATED and PRESSURE TESTED (TEST FOR TWO HOURS @ 150 P.S.I.) UNDER THE DIRECTION OF THE UTILITIES DEPARTMENT, AFTER SUCCESSFUL COMPLETION OF THE TESTING and CHLORINATION, THE PRESSURE SHALL REMAIN ON THE SYSTEM AT ALL TIMES
4. TEN FT. SEPARATION REQUIRED BETWEEN PARALLEL WATER & SANITARY SEWER LINES.
5. SADDLE IS REQUIRED FOR ALL SERVICE CONNECTIONS TO 4" PVC MAINS. SADDLE IS REQUIRED FOR 2" SERVICE CONNECTIONS TO 6" and LARGER PVC MAINS. LARGEST SERVICE CONNECTION TO A 4" MAIN IS MIN. 1-1/2" and LARGEST TO ANY MAIN IS 2".
6. MINIMUM DISTANCE BETWEEN SERVICE TAPS TO BE NOT LESS THAN 36".
7. SINGLE SERVICE TAP SHALL BE 1".
8. DOUBLE SERVICE TAP SHALL BE 1-1/ 2".
9. ALL FITTINGS SHALL BE BRASS ONLY.
10. ALL CORPORATION STOPS, SHALL BE "FORD" OR "MUELLER" ONLY.
11. FREEZE PROTECTION VALVE, SHALL BE "CONBRACO" 40LF000FPV2F.
12. ALL 3/4", 1", 1-1/2", & 2" W.M., SHALL BE SDR 9, 200 psi, ASTMD 2737, (BLUE) POLYETHYLENE TUBING.
13. ALL BRASS FITTINGS SHALL BE LEAD FREE.
14. NO GALVANIZED FITTINGS CONNECTED TO BRASS FITTINGS.
15. PLANTINGS AND OBSTRUCTIONS SHOULD BE AVOIDED WITHIN 3 FT. RADIUS FOR SERVICE ACTIVITY.
16. METER BOX SHOULD HAVE A 2'X2'X6' CLEARANCE AROUND IT.

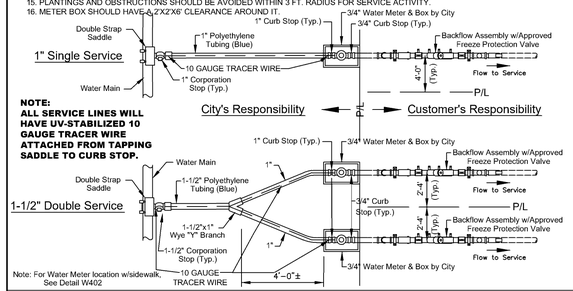

NOTE:
ALL SERVICE LINES WILL HAVE UV-STABILIZED 10 GAUGE TRACER WIRE ATTACHED FROM TAPPING SADDLE TO CURB STOP.

Note: For Water Meter location w/sidewalk, See Detail W402

DATE: 11/05/2021 **WATER MAIN SERVICE CONNECTION (BACKFLOW)** **W401**

City of DeLand - Standard Details

NOTES:
1. WATER MAINS TO BE ON NORTH or EAST SIDE OF R.O.W., APPROX. 4 FT. BACK OF CURB UNLESS OTHERWISE AUTHORIZED BY CITY ENGINEER.
2. SERVICE CONNECTIONS TO BE 4 FT. FROM SIDE LOT LINE ON EITHER SIDE OF LOT. THESE SERVICES TO BE CONSISTENT WITHIN THE SUBDIVISION. DRIVEWAYS SHALL NOT BE BUILT OVER METERS.
3. ALL LINES SHALL BE CHLORINATED and PRESSURE TESTED (TEST FOR TWO HOURS @ 150 P.S.I.) UNDER THE DIRECTION OF THE UTILITIES DEPARTMENT, AFTER SUCCESSFUL COMPLETION OF THE TESTING and CHLORINATION, THE PRESSURE SHALL REMAIN ON THE SYSTEM AT ALL TIMES
4. TEN FT. SEPARATION REQUIRED BETWEEN PARALLEL WATER & SANITARY SEWER LINES.
5. SADDLE IS REQUIRED FOR ALL SERVICE CONNECTIONS TO 4" PVC MAINS. SADDLE IS REQUIRED FOR 2" SERVICE CONNECTIONS TO 6" and LARGER PVC MAINS. LARGEST SERVICE CONNECTION TO A 4" MAIN IS MIN. 1-1/2" and LARGEST TO ANY MAIN IS 2".
6. MINIMUM DISTANCE BETWEEN SERVICE TAPS TO BE NOT LESS THAN 36".
7. SINGLE SERVICE TAP SHALL BE 1".
8. DOUBLE SERVICE TAP SHALL BE 1-1/ 2".
9. ALL FITTINGS SHALL BE BRASS ONLY.
10. ALL CORPORATION STOPS, SHALL BE "FORD" OR "MUELLER" ONLY.
11. FREEZE PROTECTION VALVE, SHALL BE "CONBRACO" 40LF000FPV2F.
12. ALL 3/4", 1", 1-1/2", & 2" W.M., SHALL BE SDR 9, 200 psi, ASTMD 2737, (BLUE) POLYETHYLENE TUBING.
13. ALL BRASS FITTINGS SHALL BE LEAD FREE.
14. NO GALVANIZED FITTINGS CONNECTED TO BRASS FITTINGS.
15. PLANTINGS AND OBSTRUCTIONS SHOULD BE AVOIDED WITHIN 3 FT. RADIUS FOR SERVICE ACTIVITY.
16. METER BOX SHOULD HAVE A 2'X2'X6' CLEARANCE AROUND IT.

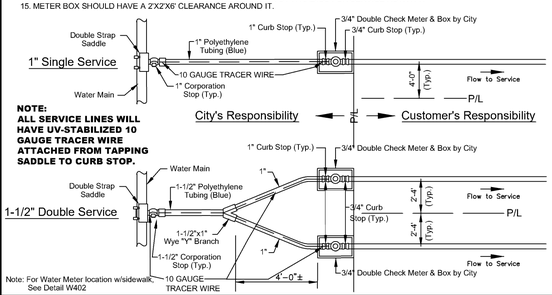

NOTE:
ALL SERVICE LINES WILL HAVE UV-STABILIZED 10 GAUGE TRACER WIRE ATTACHED FROM TAPPING SADDLE TO CURB STOP.

Note: For Water Meter location w/sidewalk, See Detail W402

DATE: 11/05/2021 **WATER MAIN SERVICE CONNECTION (DOUBLE CHECK METER)** **W401A**

City of DeLand - Standard Details

NOTES:
1. WATER MAINS TO BE ON NORTH or EAST SIDE OF R.O.W., APPROX. 4 FT. BACK OF CURB UNLESS OTHERWISE AUTHORIZED BY CITY ENGINEER.
2. SERVICE CONNECTIONS TO BE 4 FT. FROM SIDE LOT LINE ON EITHER SIDE OF LOT. THESE SERVICES TO BE CONSISTENT WITHIN THE SUBDIVISION. DRIVEWAYS SHALL NOT BE BUILT OVER METERS.
3. ALL LINES SHALL BE CHLORINATED and PRESSURE TESTED (TEST FOR TWO HOURS @ 150 P.S.I.) UNDER THE DIRECTION OF THE UTILITIES DEPARTMENT, AFTER SUCCESSFUL COMPLETION OF THE TESTING and CHLORINATION, THE PRESSURE SHALL REMAIN ON THE SYSTEM AT ALL TIMES
4. TEN FT. SEPARATION REQUIRED BETWEEN PARALLEL WATER & SANITARY SEWER LINES.
5. SADDLE IS REQUIRED FOR ALL SERVICE CONNECTIONS TO 4" PVC MAINS. SADDLE IS REQUIRED FOR 2" SERVICE CONNECTIONS TO 6" and LARGER PVC MAINS. LARGEST SERVICE CONNECTION TO A 4" MAIN IS MIN. 1-1/2" and LARGEST TO ANY MAIN IS 2".
6. MINIMUM DISTANCE BETWEEN SERVICE TAPS TO BE NOT LESS THAN 36".
7. SINGLE SERVICE TAP SHALL BE 1".
8. DOUBLE SERVICE TAP SHALL BE 1-1/ 2".
9. ALL FITTINGS SHALL BE BRASS ONLY.
10. ALL CORPORATION STOPS, SHALL BE "FORD" OR "MUELLER" ONLY.
11. FREEZE PROTECTION VALVE, SHALL BE "CONBRACO" 40LF000FPV2F.
12. ALL 3/4", 1", 1-1/2", & 2" W.M., SHALL BE SDR 9, 200 psi, ASTMD 2737, (BLUE) POLYETHYLENE TUBING.
13. ALL BRASS FITTINGS SHALL BE LEAD FREE.
14. NO GALVANIZED FITTINGS CONNECTED TO BRASS FITTINGS.
15. METER BOX SHOULD HAVE A 2'X2'X6' CLEARANCE AROUND IT.

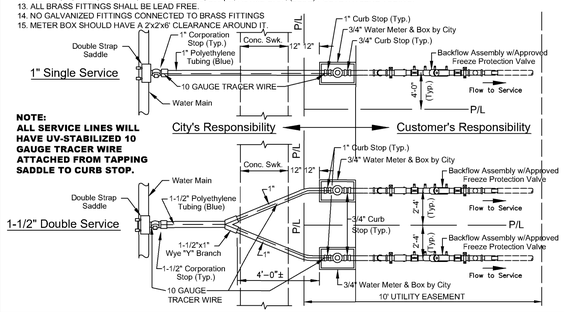

NOTE:
ALL SERVICE LINES WILL HAVE UV-STABILIZED 10 GAUGE TRACER WIRE ATTACHED FROM TAPPING SADDLE TO CURB STOP.

DATE: 11/05/2021 **WATER MAIN SERVICE CONNECTION WITH SIDEWALK (BACKFLOW)** **W402**

City of DeLand - Standard Details

NOTES:
1. WATER MAINS TO BE ON NORTH or EAST SIDE OF R.O.W., APPROX. 4 FT. BACK OF CURB UNLESS OTHERWISE AUTHORIZED BY CITY ENGINEER.
2. SERVICE CONNECTIONS TO BE 4 FT. FROM SIDE LOT LINE ON EITHER SIDE OF LOT. THESE SERVICES TO BE CONSISTENT WITHIN THE SUBDIVISION. DRIVEWAYS SHALL NOT BE BUILT OVER METERS.
3. ALL LINES SHALL BE CHLORINATED and PRESSURE TESTED (TEST FOR TWO HOURS @ 150 P.S.I.) UNDER THE DIRECTION OF THE UTILITIES DEPARTMENT, AFTER SUCCESSFUL COMPLETION OF THE TESTING and CHLORINATION, THE PRESSURE SHALL REMAIN ON THE SYSTEM AT ALL TIMES
4. TEN FT. SEPARATION REQUIRED BETWEEN PARALLEL WATER & SANITARY SEWER LINES.
5. SADDLE IS REQUIRED FOR ALL SERVICE CONNECTIONS TO 4" PVC MAINS. SADDLE IS REQUIRED FOR 2" SERVICE CONNECTIONS TO 6" and LARGER PVC MAINS. LARGEST SERVICE CONNECTION TO A 4" MAIN IS MIN. 1-1/2" and LARGEST TO ANY MAIN IS 2".
6. MINIMUM DISTANCE BETWEEN SERVICE TAPS TO BE NOT LESS THAN 36".
7. SINGLE SERVICE TAP SHALL BE 1".
8. DOUBLE SERVICE TAP SHALL BE 1-1/ 2".
9. ALL FITTINGS SHALL BE BRASS ONLY.
10. ALL CORPORATION STOPS, SHALL BE "FORD" OR "MUELLER" ONLY.
11. FREEZE PROTECTION VALVE, SHALL BE "CONBRACO" 40LF000FPV2F.
12. ALL 3/4", 1", 1-1/2", & 2" W.M., SHALL BE SDR 9, 200 psi, ASTMD 2737, (BLUE) POLYETHYLENE TUBING.
13. ALL BRASS FITTINGS SHALL BE LEAD FREE.
14. NO GALVANIZED FITTINGS CONNECTED TO BRASS FITTINGS
15. METER BOX SHOULD HAVE A 2'X2'X6' CLEARANCE AROUND IT.

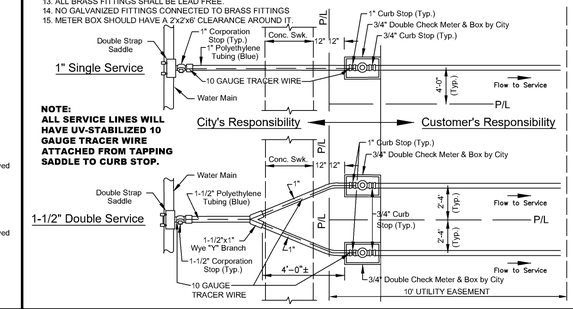

NOTE:
ALL SERVICE LINES WILL HAVE UV-STABILIZED 10 GAUGE TRACER WIRE ATTACHED FROM TAPPING SADDLE TO CURB STOP.

DATE: 11/05/2021 **WATER MAIN SERVICE CONN. WITH SIDEWALK (DBL. CHECK METER)** **W402A**

City of DeLand - Standard Details

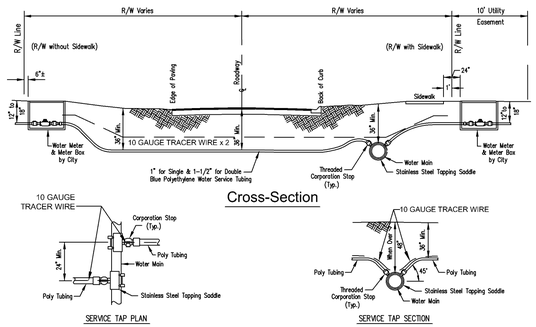

NOTES:
1. SINGLE WATER SERVICE SHALL BE, 1" POLYETHYLENE TUBING (BLUE).
2. DOUBLE WATER SERVICE SHALL BE, 1-1/2" POLYETHYLENE TUBING (BLUE).
3. WATER MAINS TO BE MIN. 36" BELOW GRADE and APPROX. 4' BACK OF CURB.
4. CURB STOP TO BE LOCATED APPROX. 2 FOOT BACK OF RIGHT-OF-WAY AND MUST HAVE LOCK WING.
5. SERVICE LINE TO BE MIN. 36" BELOW GRADE IN RIGHT-OF-WAY.
6. ALL 3/4", 1", 1-1/2" & 2" W.M., SHALL BE SDR 9, 200 psi, ASTMD 2737, (BLUE) POLYETHYLENE TUBING.
7. ALL TRACER WIRE SHALL BE (BLUE) UV-STABILIZED 10 GAUGE. DIRECTIONAL BORES REQUIRED TO HAVE TWO 10 GAUGE WIRES THAT ARE PULLED WITH DIRECTIONAL DRILL. OPEN CUT MAY USE ONLY ONE 10 GAUGE WIRE.
8. ALL SERVICE TAPS TO MEET AWWA STANDARD 45° FROM HORIZONTAL UNLESS PRIOR AUTHORIZATION RECEIVED FROM CITY.
9. ALL SERVICE LINES WILL HAVE TRACER WIRE ATTACHED FROM TAPPING SADDLE TO CURB STOP.

DATE: 11/05/2021 **WATER MAIN SERVICE LINES** **W403**

City of DeLand - Standard Details

Notes:
1.All tracer wire shall be UV-stabilized 10 gauge. Directional bores require to have two 10 gauge wires that are pulled with directional drill. Open cut may use only one 10 gauge wire. Wire length must have enough slack to be extended a minimum of 18" above grade for use.
2. Mechanical Joint Valve shall be manufactured by Clow, Mueller, Kennedy, or American Flow Control.

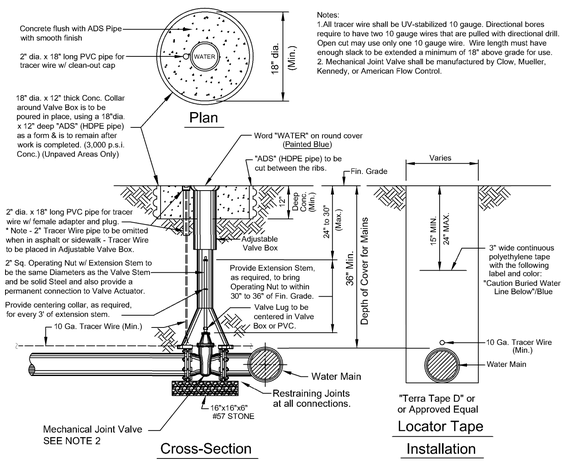

DATE: 11/05/2021 **WATER MAIN VALVE SETTING** **W404**

City of Deland - Standard Details

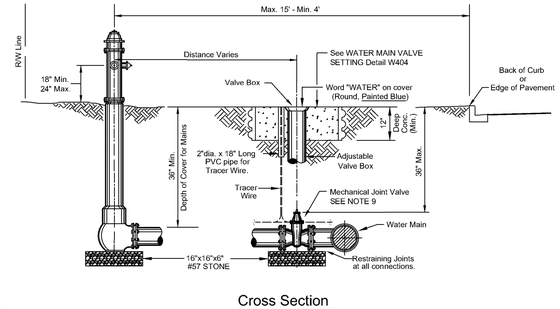

NOTES:
1. Steamer Connection to Face Street.
2. All Fire Hydrants to have 5 1/4" Valve Seat.
3. Fire Hydrants Shall be Placed at Street Corners or in the R.O.W. Adjacent to Side Lot Lines Whenever Possible.
4. See Detail W406 for Typical Connections & Fittings.
5. Fire Hydrants Shall be Painted City Safety Yellow w/Richards Paint No. 1009, Rust Shield Polyurethane.
6. Remove Chains from Cap.
7. Min. 3 ft. Clearance Should be Maintained Around Fire Hydrant for Emergency Operation Purposes.
8. All tracer wire shall be UV-stabilized 10 gauge. Directional bores require to have two 10 gauge wires that are pulled with directional drill. Open cut may use only one 10 gauge wire.
9. Mechanical Joint Valve shall be manufactured by Clow, Mueller, Kennedy, or American Flow Control.

ONLY APPROVED CITY FIRE HYDRANTS
— Mueller Super Centurion 200
— Clow Medallion

See W406 for Plan View

DATE: 11/05/2021 **FIRE HYDRANT SETTING SECTION** **W405**

City of DeLand -Standard Details

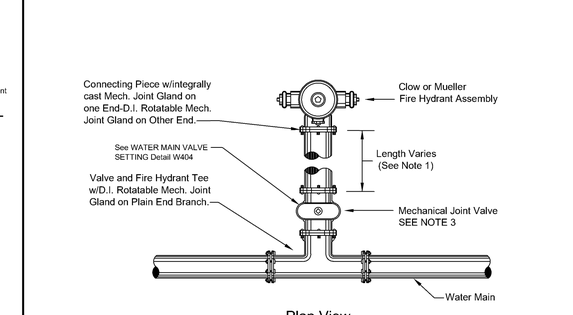

NOTES:
1. On Fire Hydrants Requiring Runout Last Two Joints Must Be Restrained Per Detail W409.
2. Fire Hydrants Should Have a 2'x2'x6' Clearance Around it.
3. Mechanical Joint Valve shall be manufactured by Clow, Mueller, Kennedy, or American Flow Control.

ONLY APPROVED CITY FIRE HYDRANTS
— Mueller Super Centurion 200
— Clow Medallion

See W405 for Cross Section

DATE: 11/05/2021 **FIRE HYDRANT SETTING PLAN** **W406**

City of DeLand - Standard Details

Notes:
1. All tracer wire shall be UV-stabilized 10 gauge. Directional bores require to have two 10 gauge wires that are pulled with directional drill. Open cut may use only one 10 gauge wire.

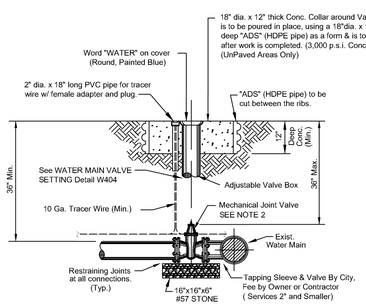

Notes:
1. For Wet Taps larger than 2", Sleeves & Valves will be furnished and installed by the contractor in the presence of the city inspector. Tapping sleeve shall be Ford, Romac, or JCM stainless steel only.
2. Mechanical Joint Valve shall be manufactured by Clow, Mueller, Kennedy, or American Flow Control.

DATE: 11/05/2021 **TAPPING SLEEVE & VALVE** **W407**

City of DeLand - Standard Details

THE FOLLOWING JOINTS MUST BE RESTRAINED IN ALL APPLICATIONS:
1. BEND - INLET AND OUTLET
2. TEE - OUTLET BRANCH
3. OFFSETS - INLET AND OUTLET
4. CAPS
5. PLUGS
6. LAST TWO(2) JOINTS ON A DEAD END RUN (min. 36')
7. LAST TWO(2) JOINTS ON A HYDRANT RUNOUT (min. 36')

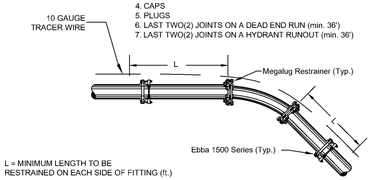

L = MINIMUM LENGTH TO BE RESTRAINED ON EACH SIDE OF FITTING (ft.)

NOM. PIPE SIZE	ELBOWS (deg.)				VALVE TEES
	11.25	22.50	45	90	
4	3	5	8	12	9
6	4	6	10	15	11
8	4	7	13	20	14
10	5	9	15	25	18
12	6	10	17	29	21
14	6	13	26	61	30
16	7	14	28	67	49
18	8	15	31	73	68
20	8	16	33	80	85

NOTE: THRUST RESTRAINT AT FITTINGS AND VALVES SHALL BE BY USE OF EBBA IRON MEGALUG RESTRAINERS. THRUST RESTRAINT BETWEEN PIPE JOINTS SHALL BE BY EBBA IRON SERIES 1500 RESTRAINERS.

DATE: 11/05/2021 **THRUST RESTRAINING DETAIL FOR PVC PIPE** **W408**

City of DeLand - Standard Details

THE FOLLOWING JOINTS MUST BE RESTRAINED IN ALL APPLICATIONS:
1. BEND - INLET AND OUTLET
2. TEE - OUTLET BRANCH
3. OFFSETS - INLET AND OUTLET
4. CAPS
5. PLUGS
6. LAST TWO(2) JOINTS ON A DEAD END RUN (min. 36')
7. LAST TWO(2) JOINTS ON A HYDRANT RUNOUT (min. 36')

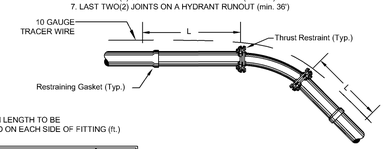

L = MINIMUM LENGTH TO BE RESTRAINED ON EACH SIDE OF FITTING (ft.)

NOM. PIPE SIZE	ELBOWS (deg.)				VALVE TEES
	11.25	22.50	45	90	
4	3	5	8	12	9
6	4	6	10	15	11
8	4	7	13	20	14
10	5	9	15	25	18
12	6	10	17	29	21
16	6	13	26	63	70
18	9	17	36	86	88
20	10	19	39	94	108
24	11	22	45	109	145

NOTE: THRUST RESTRAINT ON SLIPJOINT DUCTILE IRON PIPE SHALL BE U.S. PIPE FIELD LOCK GASKETS FOR TYTON JOINT PIPE or AMERICAN FAST-GRIP GASKETS FOR AMERICAN FASTITE PIPE. THRUST RESTRAINT ON DUCTILE IRON FITTINGS SHALL BE PROVIDED BY THE USE OF MEGALUG RETAINERS AND MECHANICAL JOINT FITTINGS.

DATE: 11/05/2021 **THRUST RESTRAINING DETAIL FOR DUCTILE IRON PIPE** **W409**

City of DeLand - Standard Details

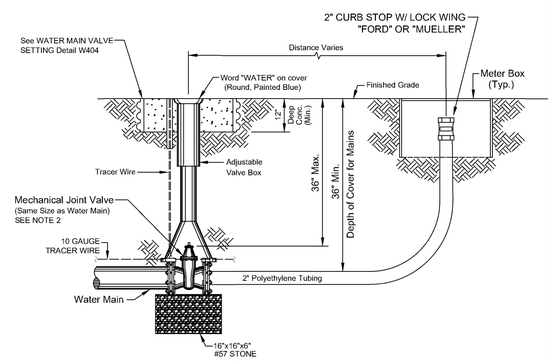

Notes:
1. All tracer wire shall be UV-stabilized 10 gauge. Directional bores require to have two 10 gauge wires that are pulled with directional drill. Open cut may use only one 10 gauge wire.
2. Mechanical Joint Valve shall be manufactured by Clow, Mueller, Kennedy, or American Flow Control.

DATE: 11/05/2021 **WATER MAIN BLOWOFF DETAIL** **W410**

City of DeLand - Standard Details

CITY OF DELAND, FLORIDA
1102 S. GARFIELD AVENUE, DELAND, FLORIDA 32724

DATE: 11/05/2021
CHECKED BY: NAME
NOT TO SCALE
ERIC SAMPSON

TITLE: WATER SYSTEM DETAILS (Sheet 1)

FILE: drive letter/details locations

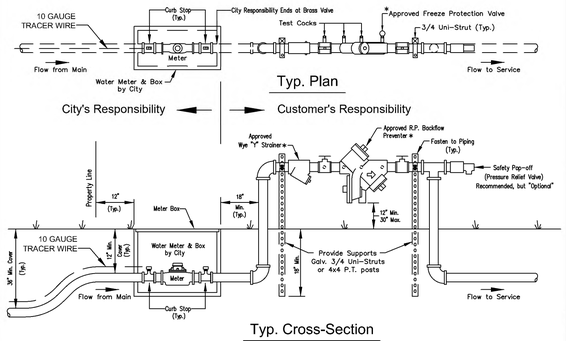

NOTES:
1. Installation Requirements: Above Ground Piping & Fittings shall be Copper or Brass Only (No PVC).
2. Device shall be Properly Supported.
3. Device shall be Protected from Freezing.
4. Freeze protection valve shall be "CONBRACO" 40LF000FPV2F.
5. Device shall be Installed Level, Tested and Certified.
6. Certification of testing shall be placed in Permit Box for inspector's verification.
7. All fittings shall be Lead Free.
8. All corporation stops, shall be "Ford" or "Mueller" only.
9. All installations shall be Approved by the City Inspector.
10. All tracer wire shall be UV-stabilized 10 gauge. Directional bores require to have two 10 gauge wires that are pulled with directional drill. Open cut may use only one 10 gauge wire.

*APPROVED REDUCED PRESSURE DEVICE
"Wilkins" 975XL2
"Watts" LF919-QT

*APPROVED FREEZE PROTECTION VALVE
"Conbraco" (Apollo) 40LF000FPV2F

*APPROVED WYE "Y" STRAINER
"Conbraco" (Apollo) #YB34LF, #YB1LF, #YB114LF, #YB112LF, #YB2LF

DATE: 11/05/2021 **WATER METER & BACKFLOW ASSEMBLY - 1" THRU 2-1/2" MODELS** **W411**

City of DeLand - Standard Details

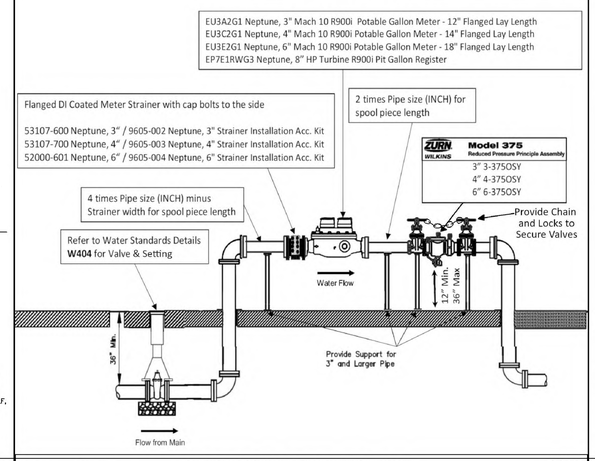

DATE: 11/05/2021 **3" AND ABOVE POTABLE WATER METER SET** **W412**

City of DeLand - Standard Details

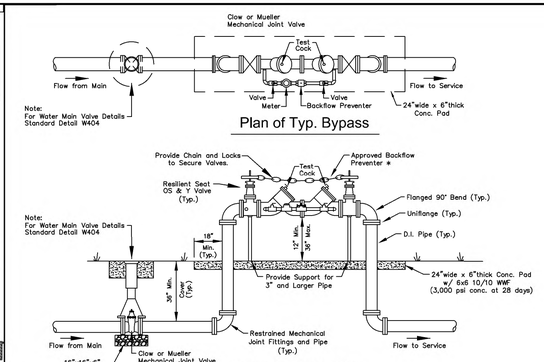

NOTES:
1. OS & Y Valve Handles will be Chained and Locked.
2. Meter Sets will be Pointed after Installation.
3. Bypass Pipe & Fittings shall be Threaded Brass, Copper or Ductile Iron. (No PVC).
4. Installation Requirements: No P.V.C. Piping above Ground.
5. Device shall be Properly Supported.
6. Device shall be Protected from Freezing.
7. All Installations shall be Approved by City Engineer.
8. Device shall be Installed Level, Tested and Certified.
9. Certification of testing shall be placed in Permit Box for Inspector's verification.
9. Consult local Fire Authority for location site & requirements for Fire Dept. connections.
10. All fittings shall be Lead Free.
11. All concrete shall have a minimum strength of 3,000 psi at 28 days.

*APPROVED R.P. DEVICES
Wilkins 975XL2
Watts Model LF909 or LF009
Conbraco 40LF-200-03

*APPROVED DOUBLE-CHECK VALVES
Wilkins 350A
Watts Model LF709 or LF007
Conbraco 40LF-100-03

DATE: 11/05/2021 **DOUBLE DETECTOR CHECK VALVE ASSEMBLY - 4" THRU 12"** **W413**

City of DeLand - Standard Details

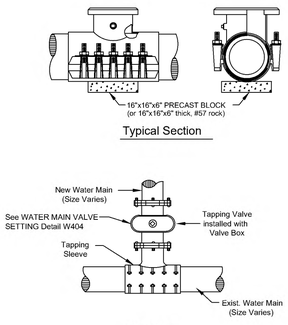

NOTES:
1. ALL TAPPING SLEEVES ABOVE 2" IN DIA. SHALL BE STAINLESS STEEL ONLY.
2. INSTALL REQUIRED RESTRAINED JOINTS. IN NO INSTANCE SHALL THRUST BLOCKS BE PERMITTED.
3. ONLY ROMAC INDUSTRIES, FORD STAINLESS STEEL OR JCM STAINLESS STEEL TAPPING SLEEVES ARE TO BE USED.
4. IN NEW CONSTRUCTION, ALL SADDLES, SLEEVES, VALVES, CORPORATION & CURB STOPS, TUBING WILL BE FURNISHED BY THE CONTRACTOR.

DATE: 11/05/2021 **STAINLESS STEEL TAPPING SLEEVE** **W414**

City of DeLand - Standard Details

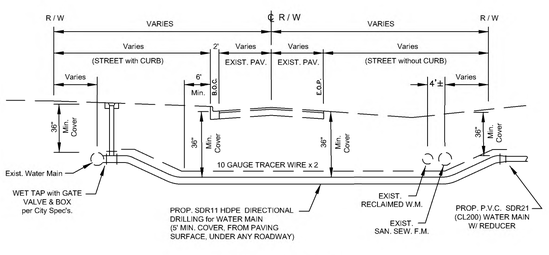

Notes:
1. Directional bores from 1-3 inches diameter must be a minimum of 36 inches in depth below edge of pavement.
2. Directional bores, 4 inches or greater, must be 10 times the diameter of the bore/backreamer, whichever diameter is greater, in depth, below edge of pavement and to extend a minimum of 6 feet beyond the edge of pavement, either side.
3. Any/All directional bore affiliated drill mud/slurry must be cleaned/reclaimed from right of way/bore pits and disposed of on approved off-site location.
4. All tracer wire shall be UV-stabilized 10 gauge. Directional bores require to have two 10 gauge wires that are pulled with directional drill. Open cut may use only one 10 gauge wire.

NOTE:
Tie Exist. Water Service Lines into New Water Main as per City Specifications.

DATE: 11/05/2021 **DIRECTIONAL BORE** **W415**

City of DeLand - Standard Details

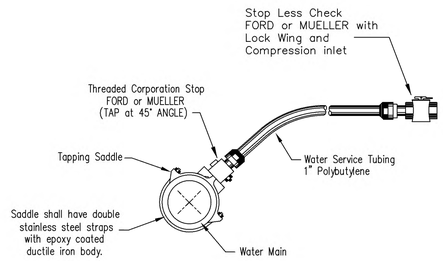

DATE: 11/05/2021 **CHLORINATION TAP** **W416**

City of DeLand - Standard Details

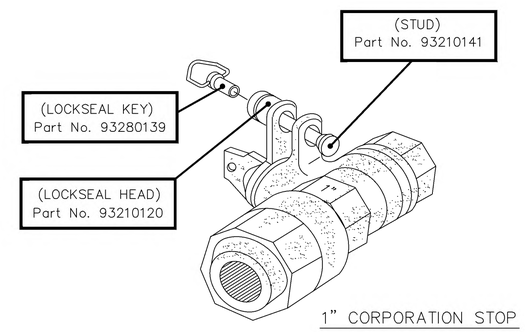

NOTE:
ALL SERVICE LINE WHIPS SHALL BE BULLET LOCKED ***OFF*** BY THE CONTRACTOR AFTER INSTALLATION AND SAMPLING HAVE BEEN COMPLETED

Manufacturer:
"FIROMATIC LOCKSEAL"

DATE: 11/05/2021 **WATER METER LOCKSEAL ASSEMBLY** **W418**

City of DeLand - Standard Details

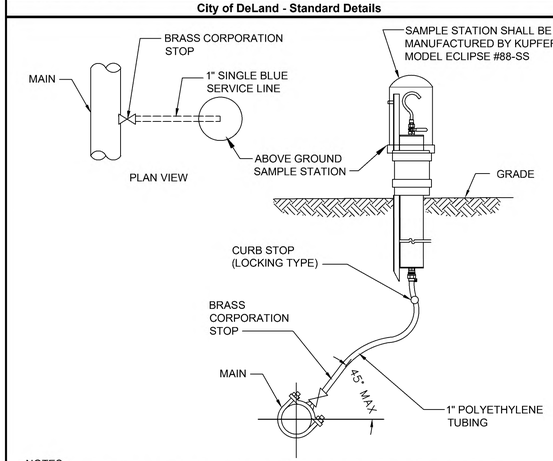

NOTES:
1. A 1 INCH SAMPLE STATION INSTALLED AT THE END OF A CUL-DE-SAC CAN ALSO SERVE AS A BLOW -OFF VALVE WHEN BOTH ARE REQUIRED.

DATE: 11/05/2021 **WATER SAMPLE STATION** **W419**

City of DeLand - Standard Details

LOCATION OF PUBLIC WATER SYSTEM MAINS IN ACCORDANCE WITH F.A.C. RULE 62-555.314

Other pipe	Horizontal Separation	Crossings (1)	Joint Spacing @ Crossing (Full Joint Centered)
Storm Sewer Stormwater Force Main, Reclaimed Water (2)	WATER MAIN 3 ft. minimum	WATER MAIN 12 inches is the minimum except for storm sewer,then 6 inches is the minimum and 12 inches is preferred	Alternate 3' ft. minimum WATER MAIN
Vacuum Sanitary Sewer	WATER MAIN 10 ft. preferred 3 ft. minimum	WATER MAIN 12 inches preferred 6 inches minimum	Alternate 3' ft. minimum WATER MAIN
Gravity Sewer Sanitary Sewer, Sanitary Sewer Force Main, Reclaimed Water (4)	WATER MAIN 10 ft. preferred 6 ft. minimum (3)	WATER MAIN 12 inches is the minimum except for gravity sewer,then 6 inches is the minimum and 12 inches is preferred	Alternate 6' ft. minimum WATER MAIN
On-Site Sewage Treatment & Disposal System(4)	10 ft minimum	---	---

(1) Water Main Should Cross Above other pipe. When Water Main Must Be Below Other Pipe,the Minimum Separation is 12" inches.
(2) Reclaimed Water Regulated Under Part III of chapter 62-610, F.A.C.
(3) 3 ft. for Gravity Sanitary sewer where the Bottom of the Water Main is laid at least 6 inches above the top of gravity sanitary sewer.
(4) Reclaimed water not regulated under Part III of Chapter 62-160, F.A.C.

DATE: 11/05/2021 **WATER PIPE SEPERATION REQUIREMENTS** **W420**

City of DeLand - Standard Details

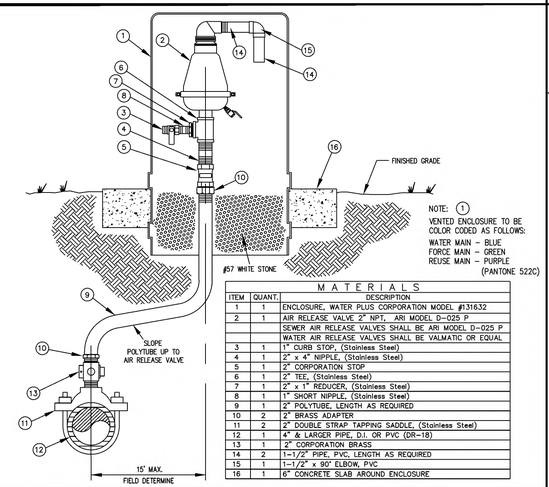

NOTE: (1) VENTED ENCLOSURE TO BE COLOR CODED AS FOLLOWS:
WATER MAIN - BLUE
FORCE MAIN - GREEN
REUSE MAIN - PURPLE (PANTONE 522C)

MATERIALS

ITEM	QUANT.	DESCRIPTION
1	1	ENCLOSURE, WATER PLUS CORPORATION MODEL #131632
2	1	AIR RELEASE VALVE 2" NPT, ARI MODEL D-025 P SEWER AIR RELEASE VALVES SHALL BE ARI MODEL D-025 P WATER AIR RELEASE VALVES SHALL BE VALMATIC OR EQUAL
3	1	1" CURB STOP, (Stainless Steel)
4	1	2" x 4" NIPPLE, (Stainless Steel)
5	1	2" CORPORATION STOP
6	1	2" TEE, (Stainless Steel)
7	1	2" x 1" REDUCER, (Stainless Steel)
8	1	1" SHORT NIPPLE, (Stainless Steel)
9	1	2" POLYTUBE, LENGTH AS REQUIRED
10	2	2" BRASS ADAPTER
11	2	2" DOUBLE STRAP TAPPING SADDLE, (Stainless Steel)
12	1	4" & LARGER PIPE, D.I. OR PVC (DR-18)
13	1	2" CORPORATION BRASS
14	2	1-1/2" PIPE, PVC, LENGTH AS REQUIRED
15	1	1-1/2" x 90° ELBOW, PVC
16	1	6" CONCRETE SLAB AROUND ENCLOSURE

DATE: 11/05/2021 **OFFSET AIR RELEASE VALVE** **W421**

City of DeLand - Standard Details

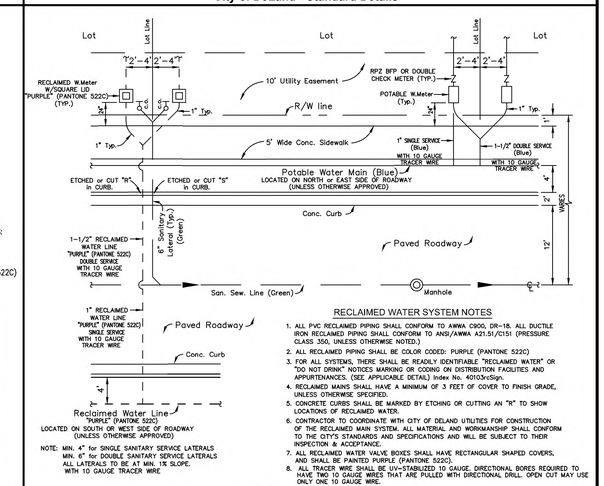

RECLAIMED WATER SYSTEM NOTES
1. ALL PVC RECLAIMED PIPING SHALL CONFORM TO AWWA C900, DR-18, ALL DUCTILE IRON RECLAIMED PIPING SHALL CONFORM TO ANSI/AWWA A21.51/C151 (PRESSURE CLASS 350, UNLESS OTHERWISE NOTED.)
2. ALL RECLAIMED PIPING SHALL BE COLOR CODED: PURPLE (PANTONE 522C)
3. FOR ALL SYSTEMS, THERE SHALL BE READILY IDENTIFIABLE "RECLAIMED WATER" OR "DO NOT DRINK" NOTICES MARKING OR CODING ON DISTRIBUTION FACILITIES AND APPURTENANCES. (SEE APPLICABLE DETAIL) Index No. 4010Sx-Sign.
4. RECLAIMED MAINS SHALL HAVE A MINIMUM OF 3 FEET OF COVER TO FINISH GRADE, UNLESS OTHERWISE SPECIFIED.
5. CONCRETE CURBS SHALL BE MARKED BY ETCHING OR CUTTING AN "R" TO SHOW LOCATIONS OF RECLAIMED WATER.
6. CONTRACTOR TO COORDINATE WITH CITY OF DELAND UTILITIES FOR CONSTRUCTION OF THE RECLAIMED MAIN SYSTEM. ALL MATERIAL AND WORKMANSHIP SHALL CONFORM TO THE CITY'S STANDARDS AND SPECIFICATIONS AND WILL BE SUBJECT TO THEIR INSPECTION & ACCEPTANCE.
7. ALL RECLAIMED WATER VALVE BOXES SHALL HAVE RECTANGULAR SHAPED COVERS, AND SHALL BE PAINTED PURPLE (PANTONE 522C).
8. ALL TRACER WIRE SHALL BE UV-STABILIZED 10 GAUGE. DIRECTIONAL BORES REQUIRED TO HAVE TWO 10 GAUGE WIRES THAT ARE PULLED WITH DIRECTIONAL DRILL. OPEN CUT MAY USE ONLY ONE 10 GAUGE WIRE.

DATE: 11/05/2021 **RESIDENTIAL UTILITY LAYOUT** **W422**

City of DeLand - Standard Details

CITY OF DELAND, FLORIDA
1102 S. GARFIELD AVENUE, DELAND, FLORIDA 32724

DATE: 11/05/2021
CHECKED BY: NAME
SCALE: NOT TO SCALE
DRAWN BY: ERIC SAMPSON

TITLE: WATER SYSTEM DETAILS (Sheet 2)

FILE: drive letter/details locations

GENERAL NOTES:

1. The side panels are dimensionally symmetric, and may be used on either side of the structure.
2. Two (2) skimmers may be installed on a single structure provided they are constructed on opposite ends.
3. The width of the front panel (dimension W) is equal to the same as the outside dimension across the front of the structure.
4. Hot dip galvanize the front panel, side panels, and flat bars after fabrication.
5. The location of the reinforcing steel in these structures must conform to the Index 425-052 to avoid conflict with the expansion anchors used to attach the skimmer.
6. Use grates on the inlets unless otherwise specified in the Plans.
7. A skimmer consists of two (2) side panels, one front panel, two (2) flat bars, and accessory hardware.

TABLE OF CONTENTS:

Sheet	Description
1	General Notes and Contents
2	Panel and Flat Bar Details
3	Installation Details

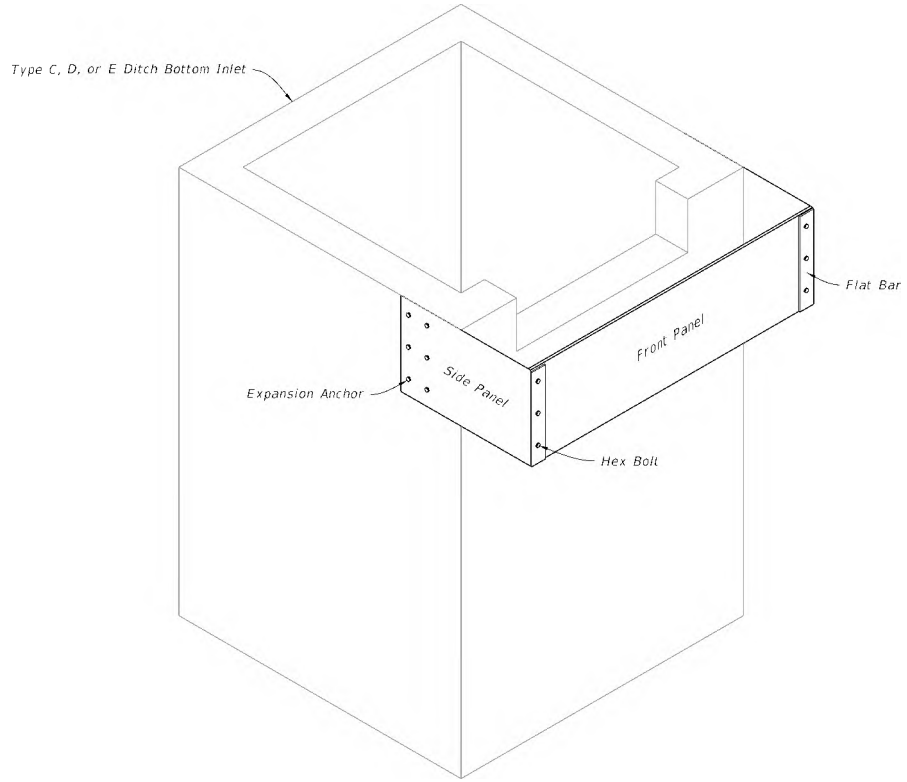

SKIMMER

10/6/2022 1:31:29 PM

LAST REVISION	REVISION	DESCRIPTION:			INDEX	SHEET
10/01/20			FY 2023-24 STANDARD PLANS	SKIMMER FOR OUTLET CONTROL STRUCTURES	425-070	1 of 3

DIMENSIONS				
Skimmer Height as Specified in the Plans				Bolt Spacing
H (in.)	D (in.)	E (in.)	L (in.)	S (in.)
12	3 3/16	3	28	3
14	3 3/16	3	28	4
16	3 3/16	3	28	5
18	3 3/16	3	28	6
20	4 3/16	4	31	6
22	4 3/16	4	31	7
24	4 3/16	4	31	8
26	4 3/16	4	31	9
28	4 3/16	4	31	10
30	5 3/16	5	31	10
32	5 3/16	5	31	11
34	5 3/16	5	31	12
36	6 3/16	6	31	12
38	6 3/16	6	31	13
40	6 3/16	6	31	14

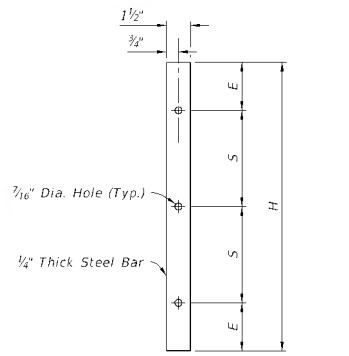

FLAT BAR

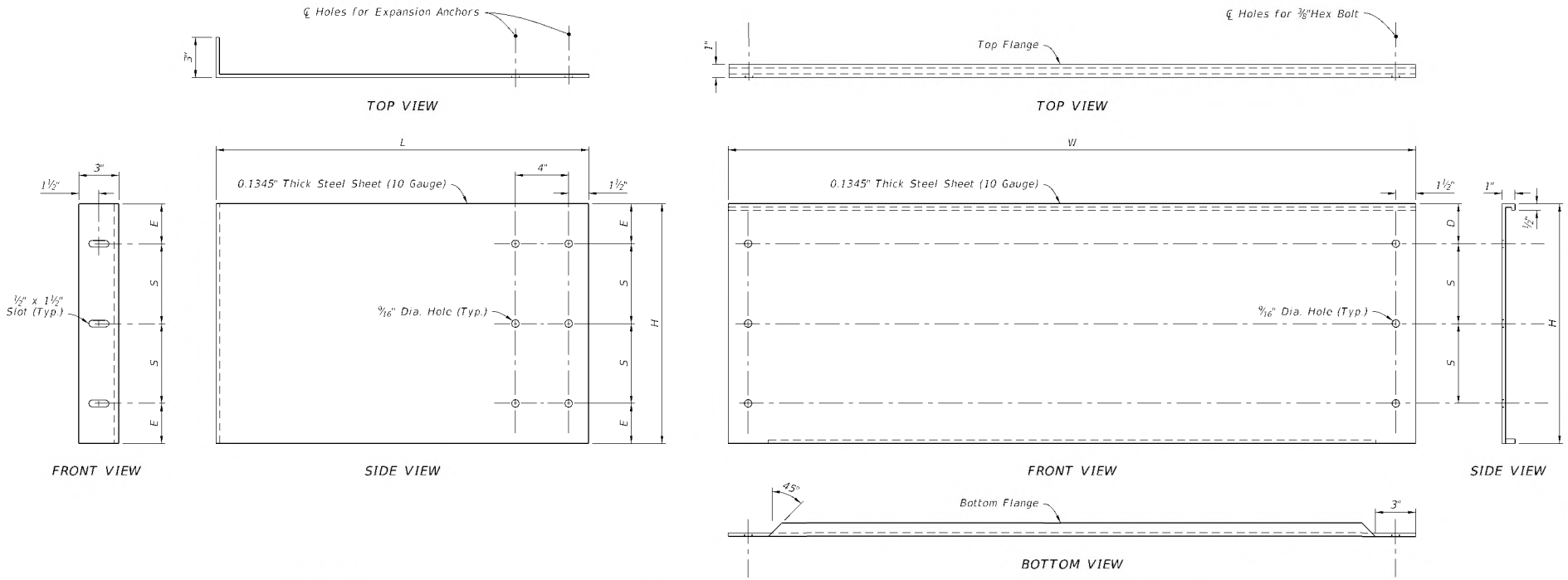

SIDE PANEL

FRONT PANEL

PANEL AND FLAT BAR DETAILS

LAST REVISION	REVISION	DESCRIPTION:				
10/01/20			FY 2023-24 STANDARD PLANS	SKIMMER FOR OUTLET CONTROL STRUCTURES	INDEX 425-070	SHEET 2 of 3

10/06/2022 1:31:30 PM

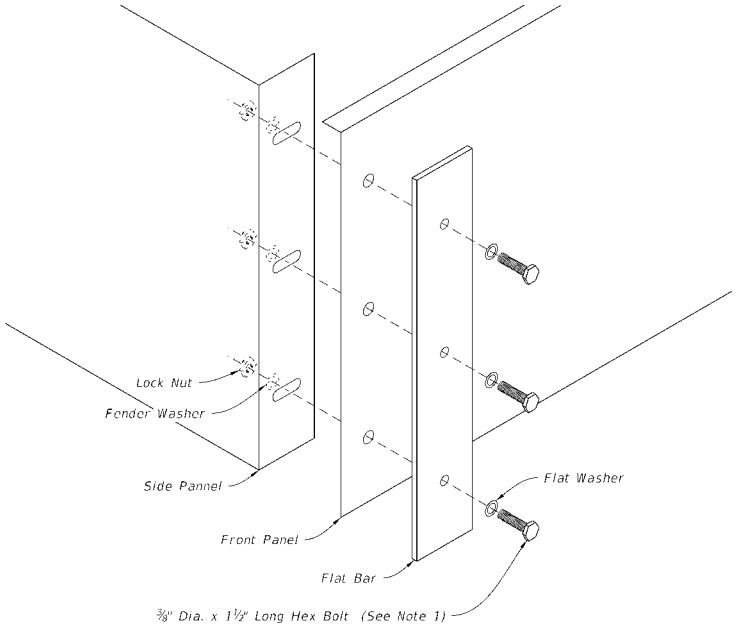

DETAIL "A"

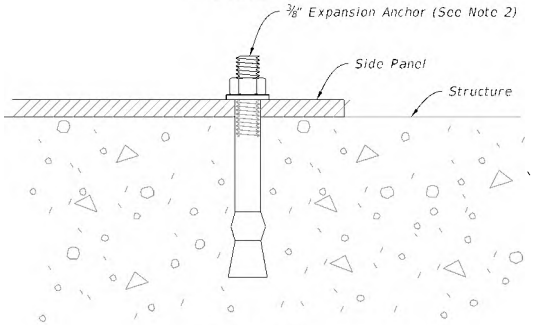

DETAIL "B"

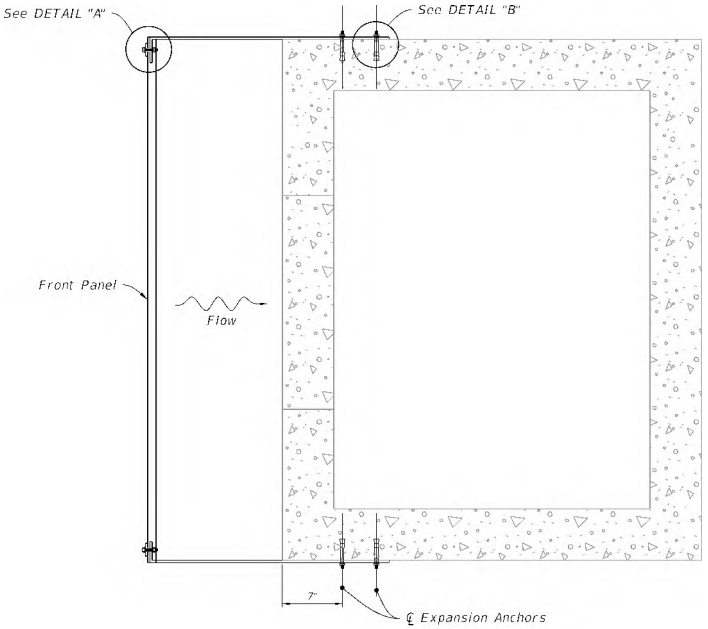

PLAN

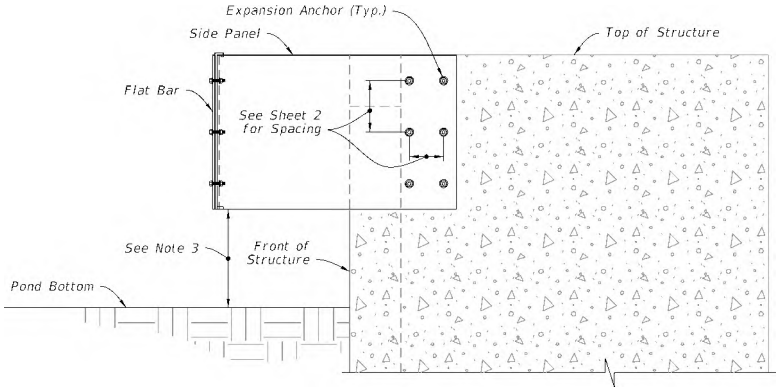

SIDE ELEVATION

NOTES:

1. Hex Bolt, Flat Washer, Fender Washer, And Lock Nut, all Stainless Steel. (6 Required Per Skimmer)
2. Install a stainless steel stud type expansion anchor with nut and washer. Embedment depth = 2½". Anchors to be installed according to the manufacturer's recommendations (12 required per skimmer).
3. Install the skimmer so that the distance between the pond bottom at the structure and the skimmer is not less than 1 foot.

INSTALLATION DETAILS

LAST REVISION	REVISION	DESCRIPTION:				INDEX	SHEET
10/01/20			FDOT	FY 2023-24 STANDARD PLANS	SKIMMER FOR OUTLET CONTROL STRUCTURES	425-070	3 of 3

10/06/2022 1:31:32 PM

NOTES:
1. RECLAIM MAINS TO BE ON SOUTH or WEST SIDE OF R.O.W., APPROX. 4 FT. BACK OF CURB UNLESS OTHERWISE AUTHORIZED BY CITY ENGINEER.
2. SERVICE CONNECTIONS TO BE 4 FT. FROM SIDE LOT LINE ON EITHER SIDE OF LOT. THESE SERVICES TO BE CONSISTENT WITHIN THE SUBDIVISION. DRIVEWAYS SHALL NOT BE BUILT OVER METERS.
3. ALL LINES SHALL BE PRESSURE TESTED (TEST FOR TWO HOURS @ 150 P.S.I.) UNDER THE DIRECTION OF THE UTILITIES DEPARTMENT. AFTER SUCCESSFUL COMPLETION OF THE TESTING, THE PRESSURE SHALL REMAIN ON THE SYSTEM AT ALL TIMES.
4. TEN FT. SEPARATION REQUIRED BETWEEN PARALLEL WATER & SANITARY SEWER LINES.
5. SADDLE IS REQUIRED FOR ALL SERVICE CONNECTIONS TO 4" PVC MAINS. SADDLE IS REQUIRED FOR 2" SERVICE CONNECTIONS TO 6" and LARGER PVC MAINS. LARGEST SERVICE CONNECTION TO A 4" MAIN IS MIN. 1-1/2" and LARGEST TO ANY MAIN IS 2".
6. MINIMUM DISTANCE BETWEEN SERVICE TAPS TO BE NOT LESS THAN 36".
7. SINGLE SERVICE TAP SHALL BE 1".
8. DOUBLE SERVICE TAP SHALL BE 1-1/ 2".
9. ALL FITTINGS SHALL BE BRASS ONLY.
10. ALL CORPORATION STOPS, SHALL BE "FORD" OR "MUELLER" ONLY.
11. ALL 3/4", 1", 1-1/2", & 2" W.M., SHALL BE SDR 9, 200 psi, ASTMD 2737, (PURPLE) POLYETHYLENE TUBING.
12. ALL BRASS FITTINGS SHALL BE LEAD FREE.
13. NO GALVANIZED FITTINGS CONNECTED TO BRASS FITTINGS.
14. PLANTINGS AND OBSTRUCTIONS SHOULD BE AVOIDED WITHIN 3 FT. RADIUS FOR SERVICE ACTIVITY.
15. METER BOX SHOULD HAVE A 2'x2'x6' CLEARANCE AROUND IT.

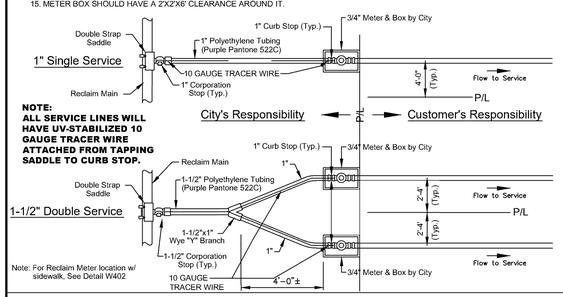

NOTE:
ALL SERVICE LINES WILL HAVE UV-STABILIZED 10 GAUGE TRACER WIRE ATTACHED FROM TAPPING SADDLE TO CURB STOP.

DATE: 11/05/2021 **RECLAIM MAIN SERVICE CONNECTION** R401
City of DeLand - Standard Details

NOTES:
1. RECLAIM MAINS TO BE ON SOUTH or WEST SIDE OF R.O.W., APPROX. 4 FT. BACK OF CURB UNLESS OTHERWISE AUTHORIZED BY CITY ENGINEER.
2. SERVICE CONNECTIONS TO BE 4 FT. FROM SIDE LOT LINE ON EITHER SIDE OF LOT. THESE SERVICES TO BE CONSISTENT WITHIN THE SUBDIVISION. DRIVEWAYS SHALL NOT BE BUILT OVER METERS.
3. ALL LINES SHALL BE PRESSURE TESTED (TEST FOR TWO HOURS @ 150 P.S.I.) UNDER THE DIRECTION OF THE UTILITIES DEPARTMENT. AFTER SUCCESSFUL COMPLETION OF THE TESTING, THE PRESSURE SHALL REMAIN ON THE SYSTEM AT ALL TIMES.
4. TEN FT. SEPARATION REQUIRED BETWEEN PARALLEL WATER & SANITARY SEWER LINES.
5. SADDLE IS REQUIRED FOR ALL SERVICE CONNECTIONS TO 4" PVC MAINS. SADDLE IS REQUIRED FOR 2" SERVICE CONNECTIONS TO 6" and LARGER PVC MAINS. LARGEST SERVICE CONNECTION TO A 4" MAIN IS MIN. 1-1/2" and LARGEST TO ANY MAIN IS 2".
6. MINIMUM DISTANCE BETWEEN SERVICE TAPS TO BE NOT LESS THAN 36".
7. SINGLE SERVICE TAP SHALL BE 1".
8. DOUBLE SERVICE TAP SHALL BE 1-1/ 2".
9. ALL FITTINGS SHALL BE BRASS ONLY.
10. ALL CORPORATION STOPS, SHALL BE "FORD" OR "MUELLER" ONLY.
11. ALL 3/4", 1", 1-1/2", & 2" W.M., SHALL BE SDR 9, 200 psi, ASTMD 2737, (PURPLE) POLYETHYLENE TUBING.
12. ALL BRASS FITTINGS SHALL BE LEAD FREE.
13. NO GALVANIZED FITTINGS CONNECTED TO BRASS FITTINGS
14. METER BOX SHOULD HAVE A 2'x2'x6' CLEARANCE AROUND IT.

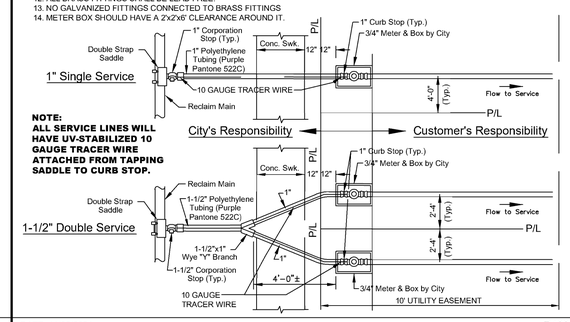

NOTE:
ALL SERVICE LINES WILL HAVE UV-STABILIZED 10 GAUGE TRACER WIRE ATTACHED FROM TAPPING SADDLE TO CURB STOP.

DATE: 11/05/2021 **RECLAIM MAIN SERVICE CONN. WITH SIDEWALK** R402
City of DeLand - Standard Details

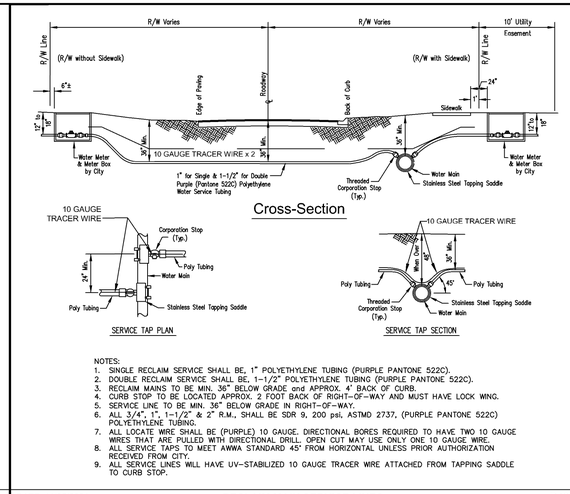

NOTES:
1. SINGLE RECLAIM SERVICE SHALL BE, 1" POLYETHYLENE TUBING (PURPLE PANTONE 522C).
2. DOUBLE RECLAIM SERVICE SHALL BE, 1-1/2" POLYETHYLENE TUBING (PURPLE PANTONE 522C).
3. RECLAIM MAINS TO BE MIN. 36" BELOW GRADE and APPROX. 4' BACK OF CURB.
4. CURB STOP TO BE LOCATED APPROX. 2 FOOT BACK OF RIGHT-OF-WAY AND MUST HAVE LOCK WNG.
5. SERVICE LINE TO BE MIN. 36" BELOW GRADE IN RIGHT-OF-WAY.
6. ALL 3/4", 1", 1-1/2", & 2" R.M., SHALL BE SDR 9, 200 psi, ASTMD 2737, (PURPLE PANTONE 522C) POLYETHYLENE TUBING.
7. ALL LOCATE WIRE SHALL BE (PURPLE) 10 GAUGE, DIRECTIONAL BORES REQUIRED TO HAVE TWO 10 GAUGE WIRES THAT ARE PULLED WITH DIRECTIONAL DRILL. OPEN CUT MAY USE ONLY ONE 10 GAUGE WIRE.
8. ALL SERVICE TAPS TO MEET AWWA STANDARD 45° FROM HORIZONTAL UNLESS PRIOR AUTHORIZATION RECEIVED FROM CITY.
9. ALL SERVICE LINES WILL HAVE UV-STABILIZED 10 GAUGE TRACER WIRE ATTACHED FROM TAPPING SADDLE TO CURB STOP.

DATE: 11/05/2021 **RECLAIM MAIN SERVICE LINES** R403
City of DeLand - Standard Details

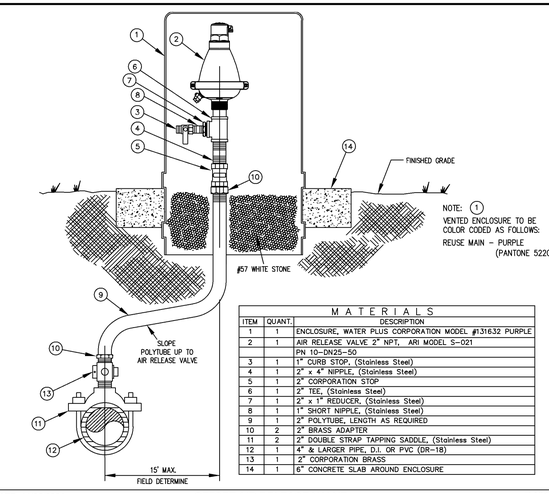

MATERIALS		
ITEM	QUANT.	DESCRIPTION
1	1	ENCLOSURE, WATER PLUS CORPORATION MODEL #131632 PURPLE
2	1	AIR RELEASE VALVE 2" NPT, ARI MODEL S-021
		PN 10-DN25-50
3	1	1" CURB STOP, (Stainless Steel)
4	1	2" x 4" NIPPLE, (Stainless Steel)
5	1	2" CORPORATION STOP
6	1	2" TEE, (Stainless Steel)
7	1	2" x 1" REDUCER, (Stainless Steel)
8	1	1" SHORT NIPPLE, (Stainless Steel)
9	1	2" POLYTUBE, LENGTH AS REQUIRED
10	2	2" BRASS ADAPTER
11	2	2" DOUBLE STRAP TAPPING SADDLE, (Stainless Steel)
12	1	4" & LARGER PIPE, D.I. OR PVC (DR-18)
13	1	2" CORPORATION BRASS
14	1	6" CONCRETE SLAB AROUND ENCLOSURE

DATE: 11/05/2021 **OFFSET AIR RELEASE VALVE** R421
City of DeLand - Standard Details

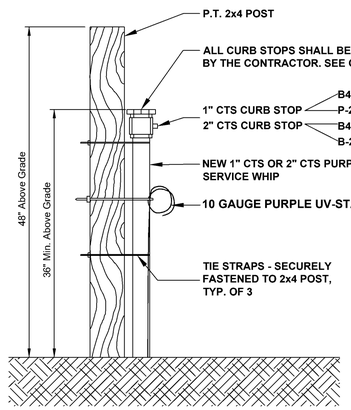

DATE: 11/05/2021 **NEW REUSE SERVICE WHIP** R426
City of DeLand - Standard Details

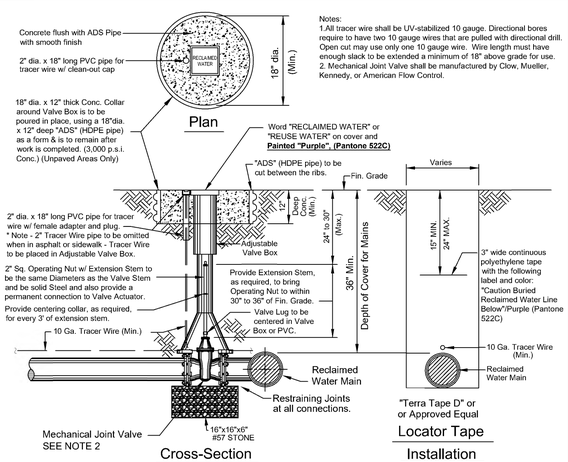

Notes:
1.All tracer wire shall be UV-stabilized 10 gauge. Directional bores require to have two 10 gauge wires that are pulled with directional drill. Open cut may use only one 10 gauge wire. Wire length must have enough slack to be extended a minimum of 18" above grade for use.
2. Mechanical Joint Valve shall be manufactured by Clow, Mueller, Kennedy, or American Flow Control.

DATE: 11/05/2021 **RECLAIMED WATER VALVE SETTING** R450
City of Deland - Standard Details

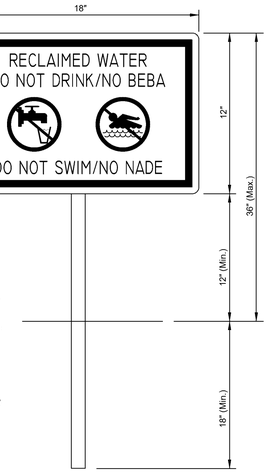

NOTES:
1. Sign background shall be white, letters shall be black (Hellvetica, Swiss 721, corel, or acceptable equal) and border shall be Pantone Purple 522C.
2. Height of sign will depend on location and surrounding landscape plant types. In all cases, the sign shall visable to the public.
3. Engineering grade refective materials shall be used for sign.
4. Sign materials shall be of 0.040 gauge metal.
5. Sign post shall be 2-3/8" OD steel pipe, hot dip galvanized per ASTM A-123, post to be provided by customer.
6. Mounting hardware shall be stainless steel.
7. Signs shall be place by the contractor in accordance with the City approved plans and/ or as approved by the City. (e.g.) Sign should be posted by entrance to subdivision, storage ponds, irrigation pumps, gate entrances to school facility or game fields, and first and ninth Tees at Golf courses.
8. Public notification should occur in HOA document and City Reclaimed Water Brochure with meter application.

DATE: 11/05/2021 **RECLAIMED WATER SIGNAGE** R451
City of DeLand - Standard Details

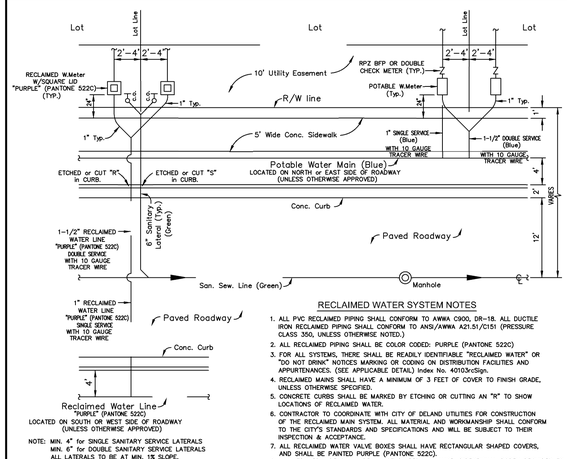

RECLAIMED WATER SYSTEM NOTES
1. ALL PVC RECLAIMED PIPING SHALL CONFORM TO AWWA C900, DR-18. ALL DUCTILE IRON RECLAIMED PIPING SHALL CONFORM TO ANSI/AWWA A21.51/C151 (PRESSURE CLASS 350, UNLESS OTHERWISE NOTED.)
2. ALL RECLAIMED PIPING SHALL BE COLOR CODED: PURPLE (PANTONE 522C)
3. FOR ALL SYSTEMS, THERE SHALL BE READILY IDENTIFIABLE "RECLAIMED WATER" OR "DO NOT DRINK" NOTICES MARKING OR CODING ON DISTRIBUTION FACILITIES AND APPURTENANCES. (SEE APPLICABLE DETAIL) Index No. 40103xcSign.
4. RECLAIMED MAINS SHALL HAVE A MINIMUM OF 3 FEET OF COVER TO FINISH GRADE, UNLESS OTHERWISE SPECIFIED.
5. CONCRETE CURBS SHALL BE MARKED BY ETCHING OR CUTTING AN "R" TO SHOW LOCATIONS OF RECLAIMED WATER.
6. CONTRACTOR TO COORDINATE WITH CITY OF DELAND UTILITIES FOR CONSTRUCTION OF THE RECLAIMED MAIN SYSTEM. ALL MATERIAL AND WORKMANSHIP SHALL CONFORM TO THE CITY'S STANDARDS AND SPECIFICATIONS AND WILL BE SUBJECT TO THEIR INSPECTION & ACCEPTANCE.
7. ALL RECLAIMED WATER VALVE BOXES SHALL HAVE RECTANGULAR SHAPED COVERS, AND SHALL BE PAINTED PURPLE (PANTONE 522C).
8. ALL TRACER WIRE SHALL BE UV-STABILIZED 10 GAUGE. DIRECTIONAL BORES REQUIRED TO HAVE TWO 10 GAUGE WIRES THAT ARE PULLED WITH DIRECTIONAL DRILL. OPEN CUT MAY USE ONLY ONE 10 GAUGE WIRE.

DATE: 11/05/2021 **RECLAIMED WATER SYSTEM LAYOUT** R452
City of DeLand - Standard Details

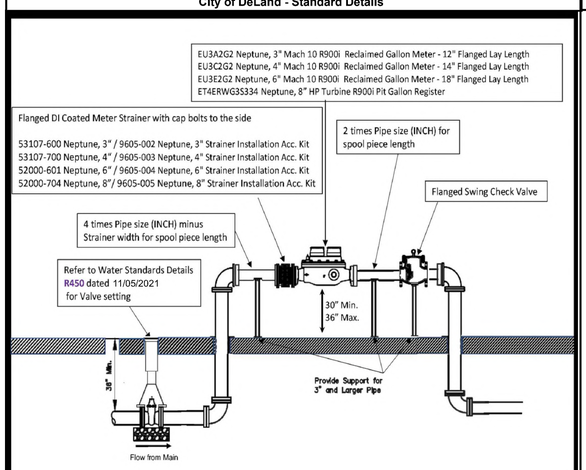

DATE: 11/05/2021 **3" AND ABOVE RECLAIMED METER SET** R453
City of DeLand - Standard Details

1. THE CITY OF DeLand's UTILITIES DEPARTMENT (386-626-7250) SHALL BE GIVEN A MINIMUM OF 48 HOURS ADVANCE NOTICE (NOT INCLUDING HOLIDAYS OR WEEKENDS) PRIOR TO the BEGINNING OF ANY RECLAIMED WATER SYSTEM CONSTRUCTION.
2. DEWATERING SHALL BE PROVIDED TO KEEP GROUNDWATER ELEVATION A MINIMUM OF 6 INCHES BELOW PROPSED RECLAIMED WATER MAIN.
3. ALL RECLAIMED WATER MAINS SHALL BE LAID ON A FIRM FOUNDATION WITH ALL UNSUITABLE MATERIAL (MUCK, ROCK, COQUINA, ETC.) REMOVED AND REPLACED WITH CLEAN GRANULAR MATERIAL.
4. TRENCHES SHALL BE BACKFILLED WITH MATERIAL ACCEPTABLE TO THE CITY WITH A MINIMUM COMPACTION OF 95% IN UNPAVED AREAS AND 98% IN PAVED AREAS IN ACCORDANCE WITH AASHTO T-180.
5. IT SHALL BE THE CONTRACTORS RESPONSIBILITY TO ENSURE THAT TRENCH COMPACTION TESTS ARE PROVIDED AT POINTS 1 FOOT ABOVE THE PIPE AND AT 1 FOOT VERTICAL INTERVALS TO FINISH GRADE, AT A MINIMUM SPACING OF EVERY 300 FEET
6. 3" METALLIZED PIPE LOCATION TAPE SHALL BE LOCATED BETWEEN 15" AND 24" BELOW FINISHED GRADE OR AS SPECIFIED BY MANUFACTURER FOR ALL PVC LINES. MARKER TAPE SHALL BE PROVIDED ON ALL DIPS AS WELL.
7. ALL SINGLE RESIDENTIAL RECLAIMED WATER SERVICES SHALL BE 1" AND DOUBLE RESIDENTIAL SERVICES SHALL BE 1-1/2". SERVICES SHALL BE CTS 3408 HIGH DENSITY POLYETHYLENE TUBING RATED FOR A MINIMUM OF 200 PSI WITH SDR 9 (CTS). THE TUBING SHALL HAVE A VIRGIN HIGH DENSITY POLYETHYLENE CENTER FOR WHICH THE MANUFACTURER SHALL FURNISH A CERTIFICATE OF PURITY. THE TUBING SHALL BE "PURPLE" (PANTONE) IN COLOR AND SHALL HAVE THE WORDS "RECLAIMED WATER" PERMANENTLY PRINTED ON THE OUTSIDE. THE TUBING SHALL HAVE U.V. PROTECTION AND SHALL NOT BE AFFECTED BY DIRECT SUNLIGHT. THE TUBING SHALL COMPLY WITH OR EXCEED THE APPLICABLE STANDARDS OF A.S.D.M. D1248, D3350, D2239, D2737, N.S.F.-14 AND A.W.W.A. C901 AND SHALL COME WITH A LIFETIME WARRANTY. APPROVED SIZES: 1", 1-1/2" AND 2" DIAMETERS. ACCEPTABLE MANUFACTURERS: ENDOT ENDOCORE RWT OR APPROVED EQUAL
8. REFER TO "NEW POTABLE AND REUSE SERVICE WHIP" R426.
9. RECLAIMED WATER VALVES SHALL BE PLACED AT ALL STREET INTERSECTIONS AND AT MAXIMUM SPACING OF 1,000 FEET.
10. AT ALL RECLAIMED WATER MAIN TEES AND CROSSES, VALVES SHALL BE INSTALLED ON ALL LEGS EXCEPT ONE.
11. APPROVED WATER VALVE TYPES MUELLER OR CLOW:
    A. STANDARD GATE VALVES EQUAL TO OR LESS THAN 24" DIAMETER (AWWA C-500) OR RESILIENT SEAT GATE VALVES (AWWA C-509)
    B. TAPPING VALVES WITH MECHANICAL OR STAINLESS STEEL TAPPING SLEEVE.
12. ALL RECLAIMED WATER VALVES SHALL BE ADJUSTED TO FINISH GRADE AND THE CAPS SHALL BE PAINTED PURPLE (PANTONE 522C) TO MAKE THEM PLAINLY DISTINGUISHABLE.
13. AS STANDARD PRACTICE RECLAIMED WATER MAINS SHALL BE INSTALLED 4 FEET OFF THE BACK OF THE CURB ON THE OPPOSITE SIDE OF THE POTABLE WATER LINES OR AS APPROVED BY THE CITY.

DATE: 11/05/2021 **RECLAIMED WATER NOTES - 1 OF 3** R460
City of DeLand - Standard Details

14. ALL RECLAIMED WATER MAINS SHALL HAVE A MINIMUM COVER OF 36 INCHES. IN SPECIAL CASES WHERE IT IS IMPOSSIBLE OR INAPPROPRIATE TO PROVIDE ADEQUATE COVER, DUCTILE IRON PRESSURE CLASS 350 OR CONCRETE ENCASEMENT MAY BE USED AS APPROVED BY THE CITY.
15. THE CONTRACTOR SHALL NOTIFY THE CITY'S DESIGNATED INSPECTOR PRIOR TO ATTEMPTING TO CLEAR ANY RECLAIMED WATER MAIN FOR USE. THE INSPECTOR SHALL COORDINATE WITH CITY PERSONNEL AT THE RECLAIMED WATER PLANT 48 HOURS PRIOR TO BEGINNING OF ANY FULL-DIAMETER FLUSH OF MAINS. THE CONTRACTOR WILL CONDUCT A STANDARD WATER PRESSURE TEST, 150 PSI STATIC PRESSURE FOR A PERIOD OF 2 HOURS PER AWWA POTABLE WATER STANDARDS. THE RECLAIMED LINES WILL THEN BE DISINFECTED WITH CHLORINE, FLUSHED CLEAR AGAIN.
16. THE CONTRACTOR SHALL BE REQUIRED TO PIG ALL RECLAIMED MAINS IN EXCESS OF 4" IN DIAMETER AND PRIMARY DISTRIBUTION MAINS LOCATED ON COLLECTOR AND ARTERIAL ROADWAYS. LAUNCHING AND EXTRACTION POINTS SHALL BE DETERMINED BY THE CONTRACTOR. ALL PIGGING OPERATIONS SHALL BE WITNESSED BY A PUBLIC UTILITIES REPRESENTATIVE OR CITY UTILITY INSPECTOR.
17. RECLAIMED WATER MAINS SHALL BE PVC AWWA CLASS C-900 OR C-905, CL 150 (COLOR: "PURPLE" PANTONE 522C) OR DIP PRESSURE CLASS 350, STANDARD CEMENT LINED UNLESS APPROVED OTHERWISE BY THE CITY.
18. ALL RECLAIMED WATER MAINS SHALL USE A THRUST RESTRAINED JOINT METHOD IN COMPLIANCE WITH THE DUCTILE IRON PIPE RESEARCH ASSOCIATION (DIPRA) GUIDELINES. IN THE EVENT THAT PVC FITTINGS ARE SPECIFIED, THE RESTRAINED JOINT SHALL BE MODIFIED IN ACCORDANCE WITH THE RECOMMENDED ADDITIONAL RESTRAINED LENGTH REQUIRED FOR PIPE WRAPPED WITH POLYETHYLENE. IN NO INSTANCE SHALL THRUST BLOCKS BE PERMITTED.
19. MEGALUGS, BOLTLESS RESTRAINED JOINTS, OR GRIPPER GASKETS SHALL BE USED ON ALL RESTRAINED JOINT INSTALLATIONS. MINIMUM DEPTH OF BURY ON PIPES NOT MEETING REQUIRED COVER REQUIREMENTS SHALL FOLLOW THE MOST RECENT DIPRA THRUST RESTRAINT DESIGN GUIDELINES. SEE DETAILS W408 AND W409.
20. GRIPPER RING GASKETS BY ROMAC MAY BE USED AS APPROPRIATE FOR RESTRAINING PRESSURE PIPE TO FITTINGS, VALVES, ETC.
21. UPON CONSTRUCTION COMPLETION AND ACCEPTANCE OF THE SYSTEM, IT SHALL BE THE DESIGN ENGINEER'S RESPONSIBILITY TO INSURE THAT THE SYSTEM IS PROPERLY CERTIFIED AND ACCEPTED BY THE CITY OF DeLand UTILITIES AND "AS-BUILTS" ARE PROVIDED TO THE CITY, PRIOR TO ANY USE OF THIS SYSTEM.
22. ALL RECLAIMED WATER MAINS AND SERVICE LINES SHALL BE READILY DISTINGUISHABLE BY THEIR "PURPLE" (PANTONE 522C) COLOR OR TAPE MARKINGS. DUCTILE IRON PIPE SHALL BE WRAPPED WITH PURPLE PANTONE 522C POLYETHYLENE.
23. ALL RECLAIMED WATER SERVICES SHALL BE MARKED ALONG THE OUTSIDE EDGE OF CURB WITH AN "R". VALVES AND BLOW-OFFS FOR RECLAIMED WATER MAINS SHALL BE MARKED BY AN "X" SET INTO THE CURB.
24. RECLAIM WATER SERVICES SHALL BE NORMALLY DOUBLE 1-1/2" SERVICES LOCATED AT SIDE LOT LINES ALTERNATING WITH POTABLE WATER SERVICE LOCATIONS. IN INSTANCES WHERE RECLAIMED WATER SERVICES NEED TO BE OFFSET, DUE TO SEWER LATERAL CONNECTION. 1" SINGLE SERVICES SHALL BE SPECIFIED, THESE SERVICES MAY BE OFFSET FROM THE LOT LINE A MAXIMUM DISTANCE OF 4.0'.

DATE: 11/05/2021 **RECLAIMED WATER NOTES - 2 OF 3** R461
City of DeLand - Standard Details

25. MAXIMUM OBTAINABLE SEPARATION OF PUBLIC RECLAIMED WATER MAINS, STORMWATER MAINS, AND SANITARY SEWER MAINS SHALL BE MAINTAINED. A MINIMUM HORIZONTAL SEPARATION OF THREE (3) FEET (OUTSIDE TO OUTSIDE), TEN (10) FEET PREFERRED. A MINIMUM VERTICAL SEPARATION OF SIX (6) INCHES, IF WATER MAIN IS ABOVE STORM, SAN. SEW. & RECLAIMED MAINS. A MINIMUM VERTICAL SEPARATION OF EIGHTEEN (18) INCHES, IF WATER MAIN IS BELOW STORM, SAN. SEW. & RECLAIMED MAINS. (Ref Detail W420)
26. NO RECLAIMED WATER HOSE BIBBS ARE PERMITTED.
27. A 75-FOOT SETBACK DISTANCE SHALL BE PROVIDED FROM PUBLIC ACCESS REUSE WETTED AREAS TO ANY PUBLIC AND ANY PRIVATE POTABLE WATER SUPPLY WELLS.
28. LOW TRAJECTORY NOZZLES ARE REQUIRED WITHIN 100 FEET OF PUBLIC EATING, DRINKING OR BATHING FACILITIES.
29. ALL TAPPING OF MAINS SHALL BE PERFORMED BY THE CONTRACTOR AND WITNESSED BY THE CITY INSPECTOR. SCHEDULING OF THESE CONNECTIONS SHALL REQUIRED A MINIMUM 48 HOUR NOTIFICATION (MEASURED ON NORMAL WORK DAYS) DIRECTED TO THE CITY'S DESIGNATED SITE INSPECTOR WHO SHALL COORDINATE THE WORK DIRECTLY WITH THE CITY'S UTILITIES DEPARTMENT. SUBSEQUENTLY, THE CONNECTION SHALL BE SCHEDULED TO COMMENCE BETWEEN 7:00 A.M. AND NOON ON THE APPROPRIATE DAY, UNLESS ALTERNATE TIMES HAVE BEEN APPROVED BY THE CITY.
30. WITH RESPECT TO TIE-IN CONNECTIONS, THE CITY RESERVES THE RIGHT TO REQUIRE CONNECTIONS TO BE PERFORMED DURING PERIODS OF LOW FLOW IN ORDER TO MINIMIZE SERVICE DISRUPTION TO EXISTING CUSTOMERS.
31. ALL WORK PERFORMED UPON RECLAIMED WATER FACILITIES OWNED OR PROPOSED TO BE OWNED BY THE CITY, SHALL BE CONSTRUCTED BY AN UNDERGROUND UTILITY OR GENERAL CONTRACTOR LICENSED IN THE STATE OF FLORIDA AND REGISTERED WITH THE CITY.
32. FOR CONSTRUCTION PURPOSES, THE PLANS SHALL PROVIDE DIMENSION OF THE PROPOSED LOCATIONS OF ALL RECLAIMED WATER MAINS MEASURED FROM THE BACK OF CURB (OR EDGE OF PAVEMENT IF NO CURB EXISTS).
33. ALL HDPE PIPE RECLAIMED WATER MAINS SHALL BE SDR 11 UNLESS SPECIFICALLY NOTED OTHERWISE. THE HDPE PIPE SHALL BE SIZED TO MATCH THE EXTERNAL DIAMETER OF THE PVC OR DIP TO WHICH IT IS ATTACHED.
34. ALL P.V.C. PIPE SHALL BE STORED IN SUCH A WAY AS TO PREVENT WARPING, DEFLECTION, OR ANY DEFORMATION.
35. RECLAIMED WATER HYDRANTS ARE NOT ALLOWED BY THE CITY.
36. NO USED, RE-USED, RUSTED, SECOND HAND, OR ANY MATERIAL THAT IS NOT "NEW" SHALL BE USED IN ANY UTILITY IMPROVEMENT PROJECTS WITHIN THE CITIES SERVICE AREA.
37. LARGE RECLAIMED WATER METERS GREATER THAN 2" TAKES A MINIMUM OF 6 WEEKS FOR DELIVERY. IN ADDITION, ALL METERS AND VAULTS GREATER THAN 2" SHALL BE INSTALLED BY THE OWNER/ DEVELOPER OR CONTRACTOR. THE FEE COLLECTED BY THE CITY IS FOR MATERIALS ONLY. ALL METERS, 2" AND LESS, SHALL BE INSTALLED BY THE CITY, AFTER ALL FEES HAVE BEEN PAID.
38. TYPICALLY, THE CITY PREFERS DOUBLE SERVICE INSTALLATIONS WHEREVER FEASIBLE. WHEN DESIGN CONFLICTS EXIST, SINGLE SERVICES MAY BE ALLOWED. THIS MAY APPLY AT STORMWATER INLETS, FIRE HYDRANTS, FPL TRANSFORMERS, ETC. AND OTHER LOCATIONS DEEMED APPROPRIATE BY THE CITY.
39. ALL RECLAIMED WATER VALVE BOXES SHALL HAVE RECTANGULAR SHAPED COVERS, AND SHALL BE PAINTED "PURPLE" (PANTONE 522C) AND LABELED REUSE OR RECLAIM.

NOTE: DIP = DUCTILE IRON PIPE

DATE: 11/05/2021 **RECLAIMED WATER NOTES - 3 OF 3** R462
City of DeLand - Standard Details

CITY OF DELAND, FLORIDA
1102 S. GARFIELD AVENUE, DELAND, FLORIDA 32724

DATE: 11/05/2021
CHECKED BY: NAME
SCALE: NOT TO SCALE
DRAWN BY: ERIC SAMPSON

TITLE: RECLAIMED WATER DETAILS
FILE: drive letter/details locations

Meadowlea Village
A COVE COMMUNITY

MEADOWLEA MHP - PH. 4 & 5 SITE PLAN
CITY OF DELAND, FLORIDA
6027-00-00-0110
SECTION 27, TOWNSHIP 16 SOUTH, RANGE 30 EAST

General Notes:

1. THIS PROPERTY WAS ANNEXED INTO THE CIT OF DELAND ON 11/2/20
2. LAND USE = CMD (CITY MEDIUM DENSITY) ADOPTED ON 11/2/20 PER CITY OF DELAND PER LU20-088 TAX PARCEL #6027-00-00-0110
3. ZONING = R-M (RESIDENTIAL MOBILE HOME) ADOPTED ON 11/2/20 PER CITY OF DELAND PER ZZ0-089 TAX PARCEL #6027-00-00-0110
4. TOTAL PROPOSED PHASE 4 AREA = 11.10 ACRES
5. TOTAL PROPOSED PHASE 5 AREA = 11.20 ACRES
6. SURVEY INFORMATION PROVIDED BY ESP ASSOCIATES FL, INC. (SEE SEPARATE SURVEY SUPPLIED ALONG WITH THIS PLAN.) DATE OF SURVEY: MARCH 7, 2022.
7. UNLESS OTHERWISE SHOWN, UNDERGROUND IMPROVEMENTS NOT LOCATED. PUBLIC RECORDS NOT SEARCHED BY ESP ASSOCIATES FL, INC. ADDITIONS OR DELETIONS TO SURVEY MAPS BY OTHER THAT THE SIGNING PARTY OR PARTIES IS PROHIBITED WITHOUT WRITTEN CONSENT OF THE SIGNING PARTY OR PARTIES.
8. SUBJECT TO EASEMENTS, RIGHTS OF WAY, RESTRICTIONS, AND RESERVATIONS OF RECORD. ALL CONSTRUCTION COVERED BY THESE PLANS SHALL COMPLY WITH THE MATERIAL REQUIREMENTS AND QUALITY CONTROL STANDARDS CONTAINED IN THE CITY OF DELAND LAND DEVELOPMENT CODE. ALL CONSTRUCTION PERFORMED IN CITY OF DELAND RIGHT-OF-WAY REQUIRES A RIGHT-OF-WAY PERMIT, ALL CONSTRUCTION IN FDOT RIGHT-OF-WAY REQUIRES A PERMIT FROM FDOT.
9. ORIENTATION FOR THE IMPROVEMENTS SHOWN HEREON SHOULD NOT BE USED TO RECONSTRUCT BOUNDARY LINES. ADDITIONS OR DELETIONS TO SURVEY MAPS BY OTHER THAN THE SIGNING PARTY OR PARTIES IS PROHIBITED WITHOUT WRITTEN CONSENT OF THE SIGNING PARTY OR PARTIES.
10. REPRODUCTIONS OF THIS SKETCH ARE NOT VALID UNLESS SEALED WITH AN EMBOSSED ENGINEER'S SEAL.
11. SITE IS NOT LOCATED IN A HISTORIC PRESERVATION DISTRICT.
12. PROPERTY IS ZONED R-M; WITH MAX DENSITY OF 6 DWELLINGS PER ACRE
    OVERALL PROJECT DENSITY = 377/87.53 AC = 4.31 UNITS/ACRE
13. IMPROVEMENTS WILL BE CONSTRUCTED IN PHASES.
14. BUILDING SETBACKS = FRONT – 10 FEET
    REAR – 7.5 FEET
    SIDE – 7.5 FEET (15 FEET BETWEEN UNITS)
15. TOTAL ACREAGE PER PHASE AS FOLLOWS:

    PHASE 1 = 1,682,152 SF (38.62 AC)
    PHASE 2 = 166,445 SF (3.82 AC)
    PHASE 3 = 911,014 SF (20.91 AC)
    PHASE 4 = 483,516 SF (11.10 AC)
    PHASE 5 = 487,872 SF (11.20 AC)
    PHASE 6 = 38,352 SF (0.88 AC)
    PHASE 7 = 43,198 SF (0.99 AC)

    TOTAL = 3,812,910 SF (87.53 AC)
16. TOTAL SPACES AS FOLLOWS:

    PHASE 1 = 167 LOTS
    PHASE 2 = 17 LOTS
    PHASE 3 = 73 LOTS
    PHASE 4 = 45 LOTS
    PHASE 5 = 57 LOTS
    PHASE 6 = 8 LOTS
    PHASE 7 = 9 LOTS
    TOTAL = 376 LOTS
17. TOTAL PHASE 4 DENSITY = 45 units / 11.10 developed acres = 4.05 UNITS/ACRE

    % BUILDING COVERAGE = 2.83 AC / 11.10 AC x 100 = 25.50 %
18. TOTAL PHASE 5 DENSITY = 57 units / 11.20 developed acres = 5.14 UNITS/ACRE

    BUILDING COVERAGE = 3.58 AC / 11.20 AC x 100 = 31.96 %
19. NOTE : TOTAL PROPOSED DENSITY (PH 4, 5) = 4.57
20. FIRE HYDRANTS ARE REQUIRED WITHIN 800 FEET OF THE EXTERIOR REMOTE PORTION OF ANY PROPOSED BUILDING. CLEARANCES SHALL BE MAINTAINED OF SEVEN AND ONE HALF FEET (7'-6") IN FRONT OF AND TO THE SIDES OF EVERY FIRE HYDRANT, WITH FOUR FEET (4'-0") CLEARANCE TO THE REAR OF THE HYDRANT.
21. NO FENCE WITH FOUNDATIONS WILL BE ALLOWED TO BE INSTALLED WITHIN SANITARY SEWER EASEMENTS.
22. EASEMENTS WILL BE RECORDED AS REQUIRED.
23. ALL CONSTRUCTION COVERED BY THESE PLANS SHALL COMPLY WITH THE MATERIAL REQUIREMENTS AND QUALITY CONTROL STANDARDS CONTAINED IN THE CITY OF DELAND LAND DEVELOPMENT REGULATIONS.
24. ALL UTILITY CONSTRUCTION SHALL CONFORM TO THE CITY OF DELAND STANDARD SPECIFICATIONS FOR WATER AND SEWER CONSTRUCTION, LATEST REVISION.
25. THE SITE CONTRACTOR IS RESPONSIBLE FOR CONSTRUCTION IN ACCORDANCE WITH THE APPROPRIATE LISTED CONSTRUCTION REFERENCES.
26. UTILITIES SHOWN HEREIN HAVE BEEN LOCATED BASED ON ABOVE GROUND EXISTENCE OF STRUCTURES. ACTUAL LOCATION OF UNDERGROUND UTILITIES IS UNKNOWN. THE CONTRACTOR SHALL BE RESPONSIBLE FOR VERIFYING THE LOCATION OF ALL EXISTING UTILITIES SHOWN OR NOT SHOWN THROUGH DIRECT CONTACT WITH THE APPROPRIATE UTILITY COMPANY. SUCH CONTACT SHALL BE MAINTAINED THROUGHOUT THE LIFE OF THE PROJECT. ANY UTILITIES OBSTRUCTIVE TO THE SITE CONTRACTORS OPERATION ARE TO BE RELOCATED BY THE APPROPRIATE UTILITY COMPANY.
27. ALL SECTION, BLOCK, AND PROPERTY CORNERS DISTURBED OR DESTROYED BY CONSTRUCTION OPERATIONS SHALL BE REPLACED BY A FLORIDA REGISTERED SURVEYOR AT THE CONTRACTOR'S EXPENSE.
28. COPIES OF THESE PLANS AS DESIGNED BY THE PROFESSIONAL ENGINEER OF RECORD HAVE BEEN RETAINED BY THE PROFESSIONAL ENGINEER AND THEY WILL NOT BE RESPONSIBLE FOR ANY SUBSEQUENT CHANGES TO THE REPRODUCIBLE ORIGINAL DOCUMENTS.
29. CONCURRENCY WILL BE MET IN ACCORDANCE WITH THE CITY REQUIREMENTS. ANY AMOUNTS DUE FOR CONCURRENCY REQUIREMENTS MUST BE PAID AT FINAL C.O. UNLESS ALL REQUIRED INFRASTRUCTURE IS INSTALLED PRIOR TO THE ISSUANCE OF THE FIRST BUILDING PERMIT.
30. FDEP CLEARANCES FOR WATER AND SEWER MUST BE SUBMITTED TO THE CITY OF DELAND PRIOR TO OBTAINING A CERTIFICATE OF OCCUPANCY.
31. AS-BUILT PLANS ARE REQUIRED TO BE SUBMITTED TO THE CITY OF DELAND AND SHALL MEET THE MINIMUM CITY STANDARD REQUIREMENTS FOR ALL WATER AND/OR SEWER CONSTRUCTION.
32. PRIOR TO THE START OF CONSTRUCTION, THE PROJECT ENGINEER SHALL SCHEDULE A PRE-CONSTRUCTION MEETING WITH THE CITY OF DELAND DEVELOPMENT COORDINATOR. THE MEETING WILL TAKE PLACE AT THE CITY GROWTH MANAGEMENT DEPARTMENT WITH THE ENGINEER, CONTRACTOR AND STAFF. NO SITE WORK SHALL COMMENCE PRIOR TO THIS MEETING TAKING PLACE.
33. ALL STORM WATER MANAGEMENT SYSTEMS SHALL BE SUBSTANTIALLY COMPLETED PRIOR TO THE CONSTRUCTION OF IMPERVIOUS AREAS.
34. CONTRACTOR SHALL PERIODICALLY SWEEP EXISTING ON-SITE PAVED SURFACES AS WELL AS ALL ABUTTING CITY STREETS, COUNTY ROADS AND STATE HIGHWAYS (AS APPROPRIATE FOR THE PARTICULAR PROJECT) TO KEEP THOSE SURFACES IN A SUBSTANTIALLY SEDIMENT-FREE CONDITION. SWEEPING SHALL BE DONE ON A PERIODIC, AS-NEEDED BASIS THROUGHOUT THE WORK WEEK INCLUDING, MOST IMPORTANTLY, AFTER EVERY RAIN EVENT AND EVERY FRIDAY AFTERNOON PRIOR TO CEASING WORK FOR THE WEEK.
35. CONTRACTOR SHALL DEVELOP AND IMPLEMENT A PLAN TO ASSURE THAT ALL WASTE, SUCH AS DISCARDED BUILDING MATERIALS, CONCRETE TRUCK WASH-OUT, CHEMICALS, LITTER AND SANITARY WASTE, ARE PROPERLY CONTROLLED WHILE ON-SITE AND TRANSPORTED AND DISPOSED OF (OFF-SITE) IN ACCORDANCE WITH ALL APPLICABLE LOCAL, STATE AND FEDERAL REGULATIONS. NO WASTE MATERIALS OF ANY KIND ARE PERMITTED TO BE BURIED ON-SITE OR DISCHARGED TO SURFACE WATERS OF THE STATE OR TO THE MUNICIPAL STORM WATER SYSTEM.

Sanitary Sewer:

SANITARY SEWER TO BE PROVIDED BY CITY OF DELAND

ANTICIPATED SANITARY SEWER DEMANDS:
103 MOBILE HOMES x 260 G.P.D. x 0.667 (FOR 2 BR) = 17,862 G.P.D

Potable Water:

POTABLE WATER TO BE PROVIDED BY CITY OF DELAND

ANTICIPATED DEMANDS:
103 MOBILE HOMES x 300 G.P.D. x 0.667 (FOR 2 BR) = 20,610 G.P.D.

Reclaimed Water:

CITY OF DELAND'S RECLAIMED WATER WILL BE USED FOR IRRIGATION.

Drainage Design Criteria:

ALL DRAINAGE STRUCTURE INVERTS SHALL BE GROUTED TO ELIMINATE SUMP CONDITIONS UNLESS OTHERWISE INDICATED. SEE SHEET 4 OF FDOT STANDARD PLAN 425-001 FOR REFERENCE.

ST. JOHNS RIVER WATER MANAGEMENT DISTRICT REQUIREMENTS FOR WET DETENTION WERE USED FOR THE DESIGN OF PHASE 4 & 5

DESIGN CRITERIA OF CHAPTER 40C-40 USED IN PHASE 4 & 5 ARE AS FOLLOWS:

1. DETENTION OF THE GREATER OF 1" OF RUNOFF WITHIN THE PROJECT'S DRAINAGE AREA OR 2.5" OF RUNOFF FROM ALL IMPERVIOUS AREA WITHIN A DRAINAGE AREA.
2. RECOVERY OF ONE-HALF OF THE REQUIRED VOLUME BETWEEN 24 AND 30 HOURS
3. A PERMANENT POOL VOLUME (PPV) TO PROVIDE A MINIMUM OF 21 DAYS RESIDENCE TIME. (SECTION 29.1; APPLICANTS HANDBOOK). PONDS PROVIDING 21 DAYS (50% ABOVE MINIMUM) OR GREATER RESIDENCE TIME ARE NOT REQUIRED TO ESTABLISH AND MAINTAIN VEGETATIVE LITTORAL ZONES. (SEC. 14.7; APPLICANTS HANDBOOK)
4. MAXIMUM DEPTH OF 12 FEET.
5. MEAN DEPTH BETWEEN 2 AND 8 FEET (SEC. 29.3; APPLICANTS HANDBOOK)

THE WET DETENTION DRAINAGE SYSTEM FOR PHASES 4 & 5 MEET THESE CRITERIA.

CITY OF DELAND'S 25 YEAR/24 HOUR STORM REQUIREMENTS ARE ALSO MET.

SEE STORMWATER REPORT FOR CALCULATIONS.

Flood Certification:

THIS PROPERTY IS IN A ZONE "X" (AREA OF MINIMAL FLOODING) AND ZONE "A" PER FEMA PANEL 12127C0460H ACCORDING TO THE FEDERAL EMERGENCY MANAGEMENT ADMINISTRATION (FEMA).

ZONE "A" ESTIMATED AT ELEVATION 69.0

Soil Conditions:

HYDROLOGIC SOIL GROUPS CONSISTS OF:

CASSIA FINE SAND – "A" SOIL TYPE
SMYRNA-SMYRNA – "A/D" SOIL TYPE

Drainage Facility Maintenance:

OWNER WILL BE RESPONSIBLE FOR MAINTAINING ON-SITE DRAINAGE FACILITIES WHICH INCLUDES MOWING DRAINAGE SWALES/BERMS ON A REGULAR BASIS.

Fire Protection:

1. FIRE HYDRANTS WILL BE INSTALLED TO PROVIDE COVERAGE OF BUILDINGS. SEE PLANS FOR LOCATIONS.
2. FIRE HYDRANTS MAXIMUM DISTANCE TO CLOSEST POINT ON A BUILDING = 600'. MAXIMUM DISTANCE BETWEEN FIRE HYDRANTS = 800'.
3. MINIMUM 6" WATER MAIN (SEE WATER-SEWER PLAN) TO PROVIDE FIRE FLOW TO HYDRANTS. FIRE DEPARTMENT CONNECTIONS AND BACK FLOW PREVENTION DEVICES TO BE INSTALLED AS REQUIRED BY FIRE MARSHALL.

Tree Protection Area (T.P.A):

TPA IN EXISTING PHASES

TPA – A = 12,728 SF (0.29 AC)
TPA – B = 26,500 SF (0.61 AC)
TPA – C = 44,311 SF (1.02 AC)
TPA – D = 26,500 SF (0.61 AC)
TPA – E = 44,311 SF (1.02 AC)
TPA – F = 133,059 SF (3.05 AC)

EXISTING TPA AREA: 328,834 SF (13.45 AC)

EXISTING LAND AREA: 2,841,160 (65.22 AC)

328,834 SF (13.45 AC) / 2,841,160 (65.22 AC) = 11.57%

TPA IN PROPOSED PHASES

TPA – 1.0 = 69,213 SF (1.59 AC)
TPA – 2.0 = NOT USED
TPA – 3.0 = 119,843 SF (2.75 AC)
TPA – 4.0 = 4,517 SF (0.10 AC)
TPA – 5.0 = 31,516 SF (0.72 AC)

PROPOSED TPA AREA: 225,089 SF (5.17 AC)

PROPOSED LAND AREA: 971,388 SF (22.30 AC)

225,089 SF (5.17 AC)/ 971,388 SF (22.30 AC) = 23.17%

TPA OVER TOTAL PROPERTY (87.33 AC)

TOTAL LAND AREA: 3,812,905 SF (87.53 AC)

TOTAL TPA: 553,923 SF (12.72 AC)

553,923 SF (12.72 AC) / 3,812,905 SF (87.53 AC) = 14.53%

ALTHOUGH NOT REQUIRED FOR THE EXISTING PHASES, PROPOSED EXCESS TPA INCREASES THE OVERALL PROPERTY TPA TO 14.53%

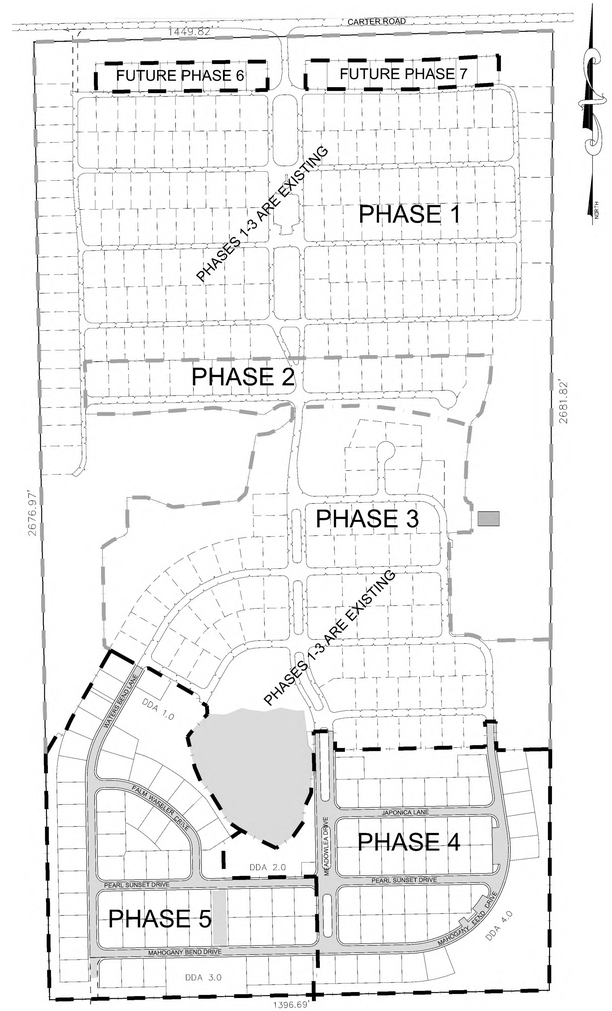

Legal Description:

THE WEST 1/2 OF THE NORTHWEST 1/4 OF SECTION 27, TOWNSHIP 16 SOUTH, RANGE 30 EAST, VOLUSIA COUNTY, FLORIDA; LESS AND EXCEPT THAT PART LYING IN COUNTY ROAD.

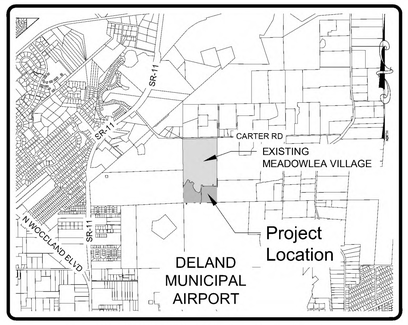

LOCATION MAP
SCALE: 1" = 3000'
DELAND, FLORIDA
SECTION 27, TOWNSHIP 16 SOUTH, RANGE 30 EAST

Site Information:

PROJECT NAME:	MEADOWLEA MASTER PLAN
PARCEL NUMBER:	6027-00-00-0110
PROJECT LOCATION:	1004 OVERLOOK DRIVE DELAND FLORIDA 32724 PH. (904)736-1853
OWNER:	MEADOWLEA VENTURE 1 LLC
CONTACT:	GARY TIMMONS
TELEPHONE:	(443) 497-7001
ADDRESS:	1901 SE 58TH AVE OCALA FL, 34480
PROJECT ENGINEER:	MICHAEL W RADCLIFFE ENGINEERING INC. 2611 SE LAKE WEIR AVE. OCALA, FLORIDA 34471
CONTACT:	CHRIS GWIN, P.E
TELEPHONE:	(352) 629-5500
TOTAL MEADOWLEA PARCEL AREA:	3,812,910 SF (87.53 AC)
TOTAL PROPOSED PH. 4 & 5 AREA:	971,749 SF (22.30 AC)
PH. 4 & 5 IMPERVIOUS AREA:	384,297 S.F. (8.82 AC.)
ZONING:	R-M
MINIMUM MOBILE HOME LOT WIDTH	30 FEET
MINIMUM MOBILE HOME LOT DEPTH	80 FEET
LAND USE:	RESIDENTIAL MOBILE HOME DISTRICT
SETBACKS:	10' FRONT SETBACK (FROM EOP) 15' SIDE SETBACKS 15' REAR SETBACK 40' BUILDING SETBACK (FROM ANY PROJECT PERIMETER PROPERTY LINE)
BUILDING(S) HEIGHT:	1 STORY

Statement of Intent:

INFRASTRUCTURE AND CONSTRUCTION FOR DEVELOPMENT OF 103 MOBILE HOME LOTS AND ACCESSORY AMENITY FACILITIES ADDED TO EXISTING MOBILE HOME PARK. MEADOWLEA VILLAGE IS AN ADULT 55+ COMMUNITY.

Index of Sheets:

C001	COVER SHEET
M001	MASTER PLAN
C002	DETAILS
C003	DRAINAGE PLAN
C004	DRAINAGE DETENTION AREAS
C005	GRADING PLAN
C006	SITE PLAN
C007	UTILITIES PLAN
C008	LANDSCAPE AND IRRIGATION
C009	TREE PLAN
C010	TREE CHART
C011	TREE DETAILS
C012-19	PLAN AND PROFILES
C020	SIGNAGE AND STRIPING
C021	SWPPP
S001-3	SURVEY
10 PAGES	CITY OF DELAND UTILITY DETAILS
# PAGES	FDOT STANDARD PLANS INDEX

Date:	By:	Revisions:
3/27/23	BIL	REVISED PER CIT OF DELAND COMMENTS.

Assigned: MWR | Scale: N/A
Drawn: BIL | Project: 2022-04
Checked: MWR | Date: 10-14-2022
File: Meadowlea Village Ph. 4-7.dwg

MICHAEL W. RADCLIFFE ENGINEERING, INC.
2611 S.E. Lake Weir Avenue Ocala, FL 34471 (352) 629-5500 FAX (352) 629-1010
Certificate No. EB-0006198 • Michael W. Radcliffe P.E. #31170 • Christopher A. Gwin P.E. #66568
www.radcliffeengineering.com

Copyright © 2023 Michael W. Radcliffe Engineering, Inc. All Rights Reserved

Project Name: Meadowlea Village Ph. 4&5
Sheet Name: Cover Sheet

Revisions to Plan Set
THIS DATE INDICATES THE LATEST DATE AT WHICH ANY PART OF THIS PLAN SET WAS REVISED.
Date: 3-27-23

Sheet No.
C001
of
C021

X:\MWRE Projects\Meadowlea MHP\2022-04 Meadowlea Village Ph. 4-7\Design\CADD\Meadowlea Village Ph. 4-7.dwg 3/28/2023 1:23 PM

Meadowlea Village
A COVE COMMUNITY

MEADOWLEA MHP - PH. 4-7 SITE PLAN
CITY OF DELAND, FLORIDA

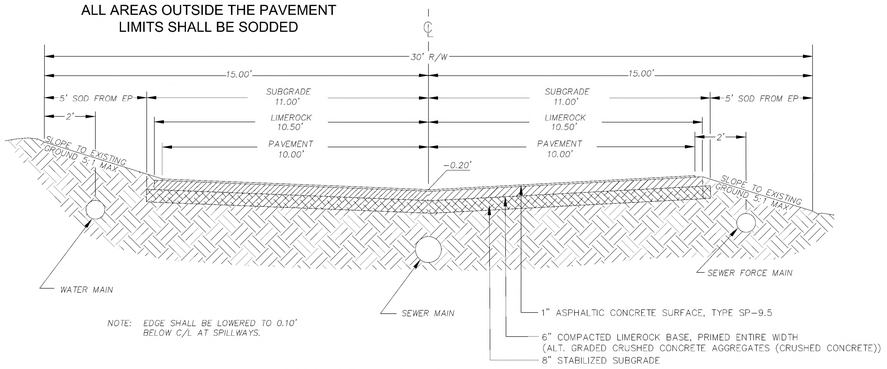

TYPICAL PAVEMENT SECTION INVERTED CROWN
Not to Scale

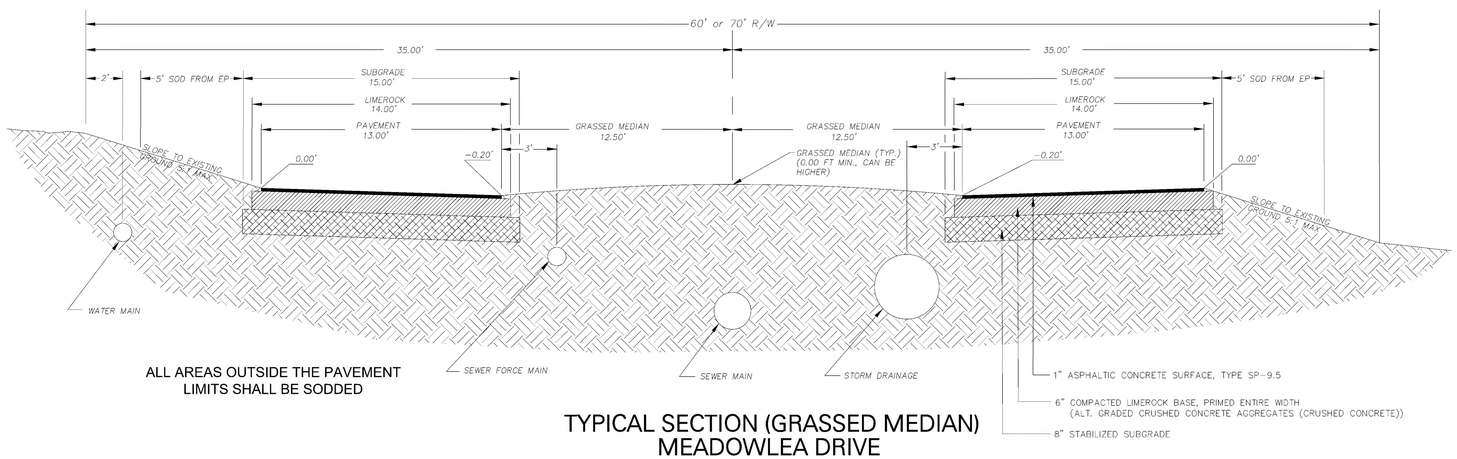

TYPICAL SECTION (GRASSED MEDIAN) MEADOWLEA DRIVE
Not to Scale

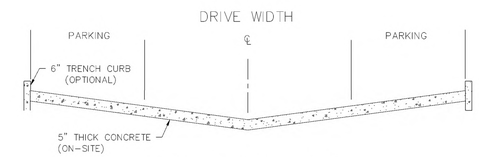

Concrete Drive Detail
Not To Scale

CONCRETE DRIVE CONSTRUCTION NOTE:

ALL CONCRETE TO BE 3,000 psi, 5" THICK WITH 6"X6"W1.4/W1.4 WWF OVER 6" STABILIZED SUBGRADE. (USE 6" THICK CONCRETE WITHIN RIGHT-OF-WAY)

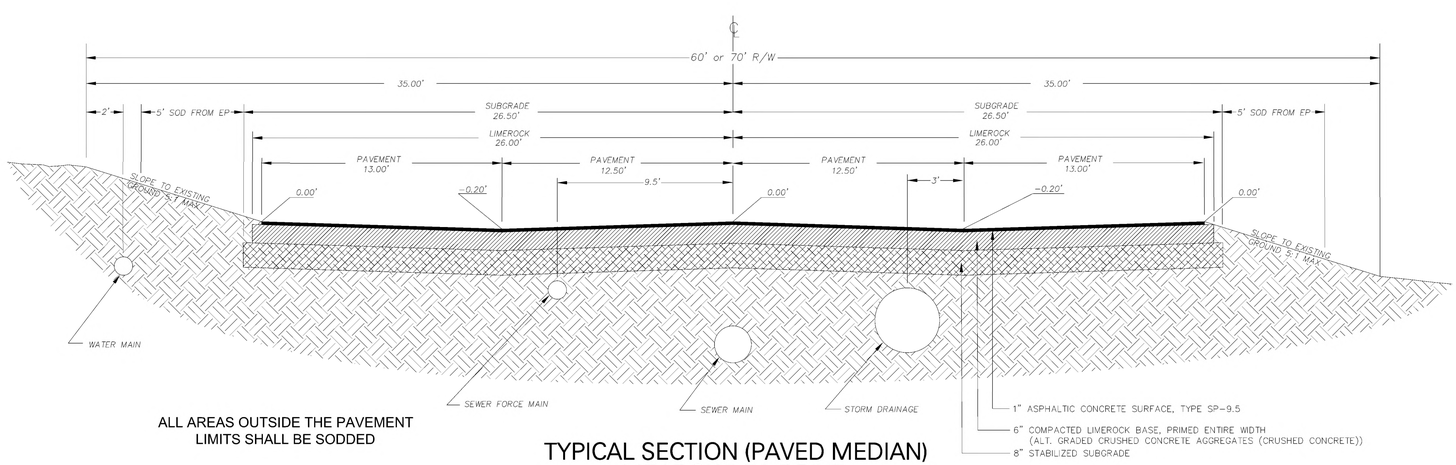

TYPICAL SECTION (PAVED MEDIAN) MEADOWLEA DRIVE
Not to Scale

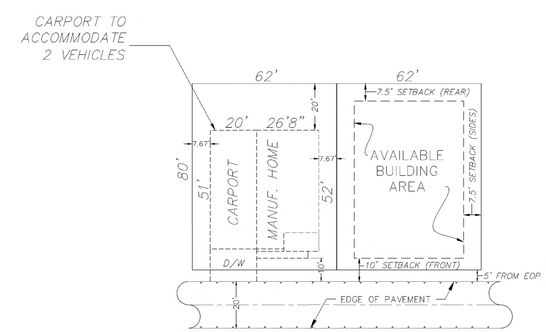

TYPICAL SPACE LAYOUT
Not To Scale

SETBACKS PER DELAND MUNICODE 33-17.11

SETBACKS FROM BOUNDARIES/BUILDING SEPARATION/IMPERVIOUS SURFACE LIMITATIONS

ACCESSORY STRUCTURE SETBACKS: NO MOBILE HOME ACCESSORY STRUCTURE SHALL BE CLOSER THAN 7.5 FEET TO ANY REAR OR SIDE MOBILE HOME LOT.

SETBACKS FROM INTERNAL STREETS: TEN FEET FROM EDGE OF PAVEMENT.

Date:	By:	Revisions:
3/27/23	BIL	REVISED PER CIT OF DELAND COMMENTS

Designed: MWR
Drawn: BIL
Checked: MWR
Scale: N.T.S.
Project: 2022-04
Date: 10-14-2022
File: Meadowlea Village Ph. 4-7.dwg

MICHAEL W. RADCLIFFE ENGINEERING, INC.
2611 S.E. Lake Weir Avenue Ocala, FL 34471 (352) 629-5500 FAX (352) 629-1010
Certificate No. EB-0006198 • Michael W. Radcliffe P.E. #31170 • Christopher A. Davis P.E. #65568
www.radcliffeengineering.com

Copyright © 2023 Michael W. Radcliffe Engineering, Inc. All Rights Reserved

Project Name: Meadowlea Village Ph. 4&5
Sheet Name: Details

Sheet No. C002 of C021

X:\MWRE Projects\Meadowlea MHP\2022-04 Meadowlea Village Ph. 4-7\dwg\CADD\Meadowlea Village Ph. 4-7.dwg 3/28/2023 12:33 PM

Meadowlea Village
A COVE COMMUNITY

MEADOWLEA MHP - PH. 4-7 SITE PLAN
CITY OF DELAND, FLORIDA

DRAINAGE SYSTEM STRUCTURES

S-1.1.0
18" Concrete MES
Northing: 1,726,123.96
Easting: 562,973.65
Inv. 62.00

S-1.1.1
FDOT Type E Inlet
Northing: 1,726,140.63
Easting: 562,932.48
Grate El. 69.11
E Inv. Out 66.90 (P-(27))

S-1.2.0
FDOT Type E Inlet
Northing: 1,726,129.32
Easting: 563,106.35
Grate El. 208.60
E Inv. Out 68.00 (P-(48) (1))

S-1.2.1
FDOT Type E Inlet
Northing: 1,726,124.80
Easting: 563,120.62
Grate El. 68.50

S-2.1.0
18" Concrete MES
Northing: 1,725,711.03
Easting: 563,273.58
Inv. 61.00

S-2.1.1
FDOT Type E Inlet
Northing: 1,725,667.06
Easting: 563,274.31
Grate El. 70.60
N Inv. Out 66.70 (P-(28))

S-2.2.0
18" Concrete MES
Northing: 1,725,765.57
Easting: 563,472.68
Inv. 62.00

S-2.2.1
FDOT Type E Inlet
Northing: 1,725,766.41
Easting: 563,517.83
Grate El. 69.75
W Inv. Out 65.56 (P-(30))

S-3.1.0
18" Concrete MES
Northing: 1,725,434.89
Easting: 563,119.76
Inv. 60.00

S-3.1.1
FDOT Type E Inlet
Northing: 1,725,474.19
Easting: 563,119.46
Grate El. 68.70
S Inv. Out 64.50 (P-(24))

S-3.2.0
FDOT Type C Inlet
Northing: 1,725,382.31
Easting: 563,290.98
Grate El. 69.50
E Inv. Out 66.60 (P-(37))

3.2.1
6" Concrete MES
Northing: 1,725,407.06
Easting: 563,890.93
Inv. 64.53

S-4.1.0
18" Concrete MES
Northing: 1,725,666.64
Easting: 564,051.71
Inv. 57.50

S-4.1.1
FDOT Type E Inlet
Northing: 1,725,680.76
Easting: 564,015.26
Grate El. 65.15
N Inv. In. 59.05 (P-(35))
E Inv. Out 60.00 (P-(29))

S-4.1.2
FDOT Type E Inlet
Northing: 1,725,870.62
Easting: 564,013.49
Grate El. 66.17
S Inv. Out 60.00 (P-(35))

S-4.2.0
24" Concrete MES
Northing: 1,725,482.26
Easting: 563,904.72
Inv. 57.50

S-4.2.1
FDOT Type E Inlet
Northing: 1,725,513.72
Easting: 563,872.86
Grate El. 65.00
W Inv. In. 60.00 (P-(31))
SE Inv. Out 59.75 (P-(32))

S-4.2.2
FDOT Type E Inlet
Northing: 1,725,489.88
Easting: 563,666.92
Grate El. 66.92
E Inv. Out 61.00 (P-(31))

DRA OVERFLOW STRUCTURES

S-2.3.0
24" x 24" Yard Inlet
Northing: 1,725,731.97
Easting: 563,366.72
Grate El. 70.60
NW Inv. In 68.0 (1 3/8 Orifice)
NE Inv. Out 69.22 (P-(48))

S-2.3.1
6" Concrete MES
Northing: 1,725,744.20
Easting: 563,372.97
Inv. 69.08

S-3.2.0
24" x 24" Yard Inlet
Northing: 1,725,382.31
Easting: 563,290.98
Grate El. 69.50
N Inv. In 66.6 (1 1/4 Orifice)
E Inv. Out 66.60 (P-(37))

3.2.1
6" Concrete MES
Northing: 1,725,407.06
Easting: 563,890.93
Inv. 64.53

S-4.3.0
FDOT Type C Inlet
Northing: 1,725,580.38
Easting: 564,084.60
Grate El. 64.65
SE Inv. In (2 1/8 Orifice)
SE Inv. Out 62.50 (P-(42))

S-4.3.1
6" Concrete MES
Northing: 1,725,566.09
Easting: 564,095.82
Inv. 61.92

GRAPHIC SCALE
60 0 30 60 120 240
(IN FEET)
1 inch = 60 ft.

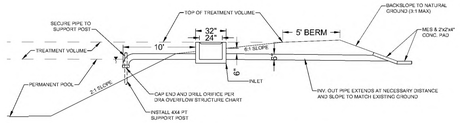

INLET DETAIL (TYP.)
Not To Scale

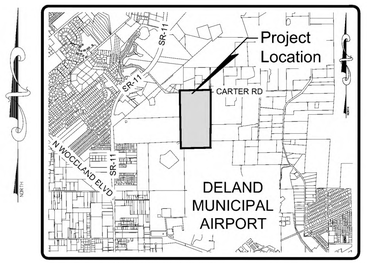

LOCATION MAP
SCALE: 1" = 4000'
DELAND, FLORIDA
SECTION 27, TOWNSHIP 16 SOUTH, RANGE 30 EAST

Legend:

- -65- = CONTOUR LABEL
- = FEMA ZONES
- = WETLAND BOUNDARY
- = WETLAND BUFFER
- = EXISTING CONTOUR (MJR)
- = EXISITNG CONTOUR (MNR)
- = PROPOSED SILT FENCE
- = DRAINAGE BASIN BOUNDARY
- = SUB BASIN BOUNDARY
- = PROP BLEED DOWN CLEANOUT
- = PHASE LINE
- C-C C-C = D.D.A. CROSS SECTION LOCATION (SEE D.D.A. SECTIONS SHEET C004)

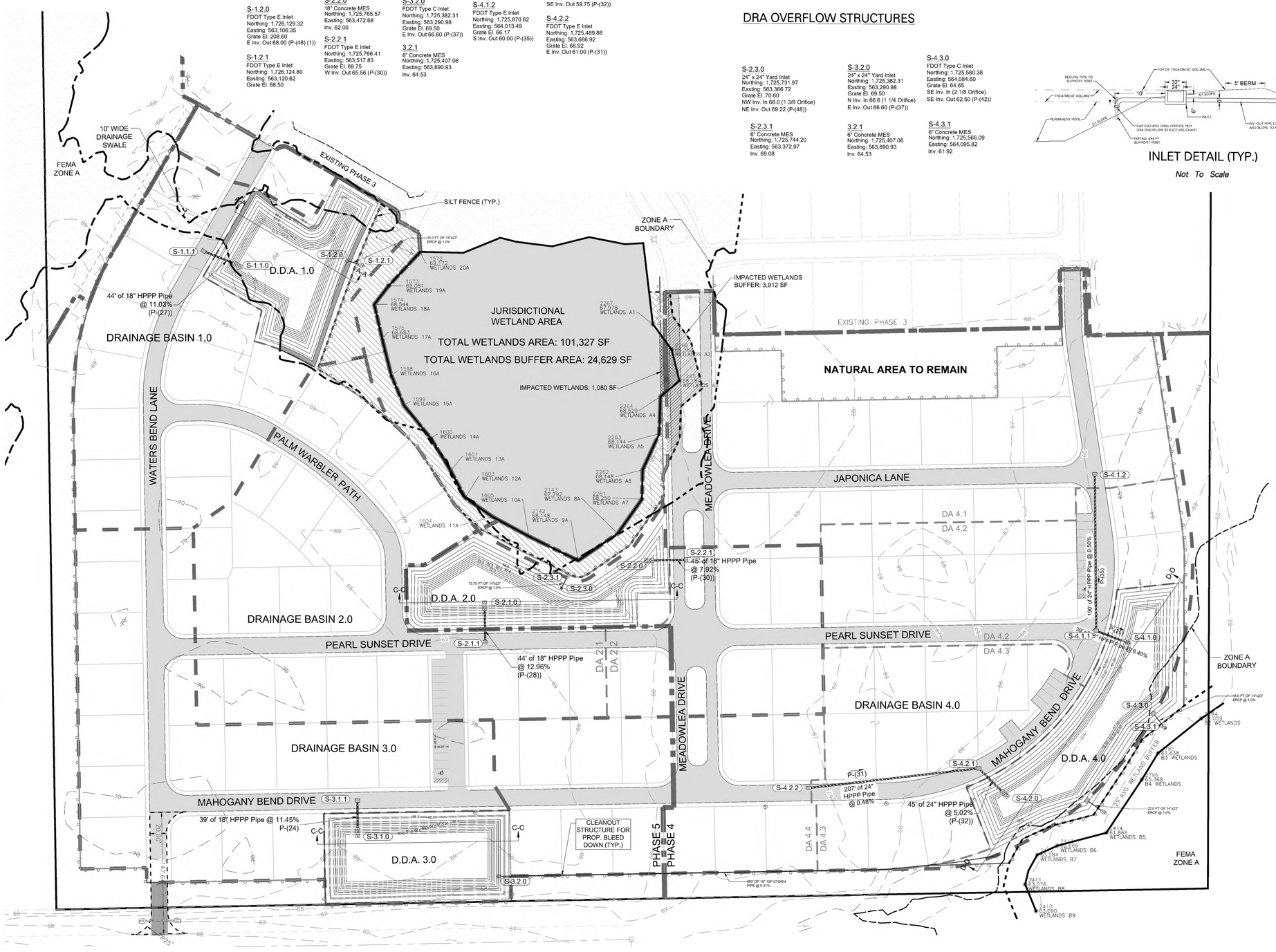

DRAINAGE BASIN 1.0
TOTAL AREA – 117,248 SF
TOTAL IMPERV. – 59,625 SF

DRAINAGE BASIN 2.1
TOTAL AREA – 131,865 SF
TOTAL IMPERV. – 68,530 SF

DRAINAGE BASIN 2.2
TOTAL AREA – 46,511 SF
TOTAL IMPERV. – 25,607 SF

DRAINAGE BASIN 3.0
TOTAL AREA – 140,086 SF
TOTAL IMPERV. – 66,033 SF

DRAINAGE BASIN 4.1
TOTAL AREA – 145,977 SF
TOTAL IMPERV. – 70,070 SF

DRAINAGE BASIN 4.2
TOTAL AREA – 66,753 SF
TOTAL IMPERV. – 40,205 SF

DRAINAGE BASIN 4.3
TOTAL AREA – 65,647 SF
TOTAL IMPERV. – 35,990 SF

DRAINAGE BASIN 4.4
TOTAL AREA – 73,111 SF
TOTAL IMPERV. – 42,649 SF

Revisions:		
Date:	By:	
3/27/23	BIL	REVISED PER CIT OF DELAND COMMENTS.

Designed: MWR	Scale: 1" = 60'		
Drawn: BIL	Project: 2022-04		
Checked: MWR	Date: 10-14-2022		
File: Meadowlea Village Ph. 4-7.dwg			

MICHAEL W. RADCLIFFE ENGINEERING, INC.
2611 S.E. Lake Weir Avenue Ocala, FL 34471 (352) 629-5500 FAX (352) 629-8010
Certificate No. EB-0006198 • Michael W. Radcliffe P.E. #31170 • Christopher A. Gwin P.E. #69358
www.radcliffeengineering.com

COPYRIGHT © 2023 Michael W. Radcliffe Engineering, Inc. All Rights Reserved

Project Name: Meadowlea Village Ph. 4&5
Sheet Name: Drainage Plan

Sheet No. C003 of C018

X:\MWRE Projects\Meadowlea MHP\2022-04 Meadowlea Village Ph. 4-7\Design\CADD\Meadowlea Village Ph. 4-7.dwg 3/28/2023 2:32 PM

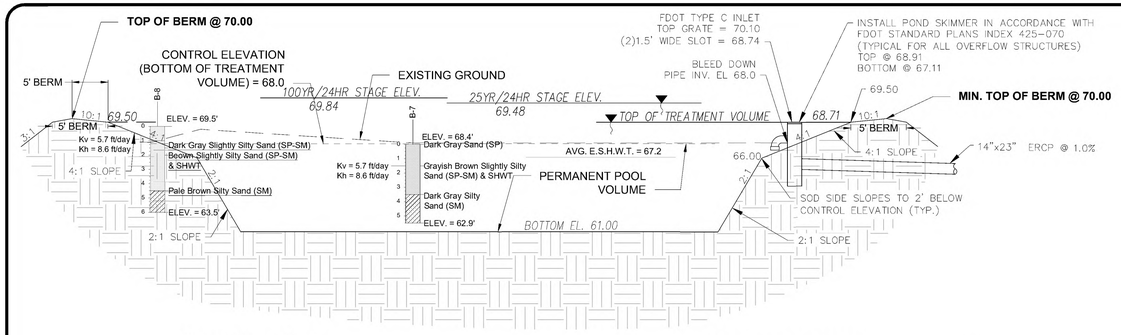

NOTE: SEE GEOTECHNICAL REPORT BY CENTRAL TESTING LABORATORY, INC. DATED JANUARY 27, 2022 INCLUDED IN STORMWATER REPORT FOR MORE DETAILED BORING INFORMATION

Section A-A
D.D.A. 1.0
Not To Scale

NOTE: SOD ALL SIDE SLOPES, BERMS AND DRA BOTTOM.

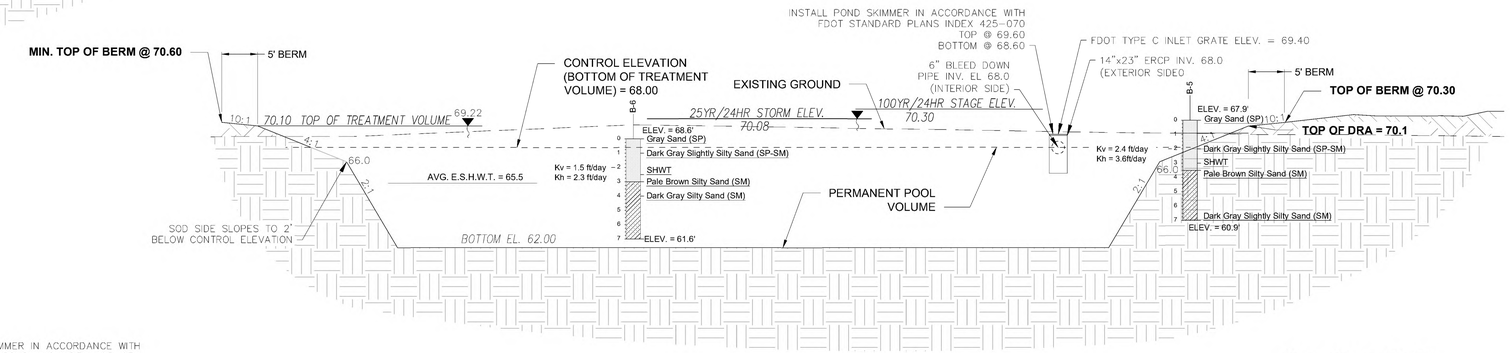

Section B-B
D.D.A. 2.0
Not To Scale

NOTE: SOD ALL SIDE SLOPES, BERMS AND DRA BOTTOM.

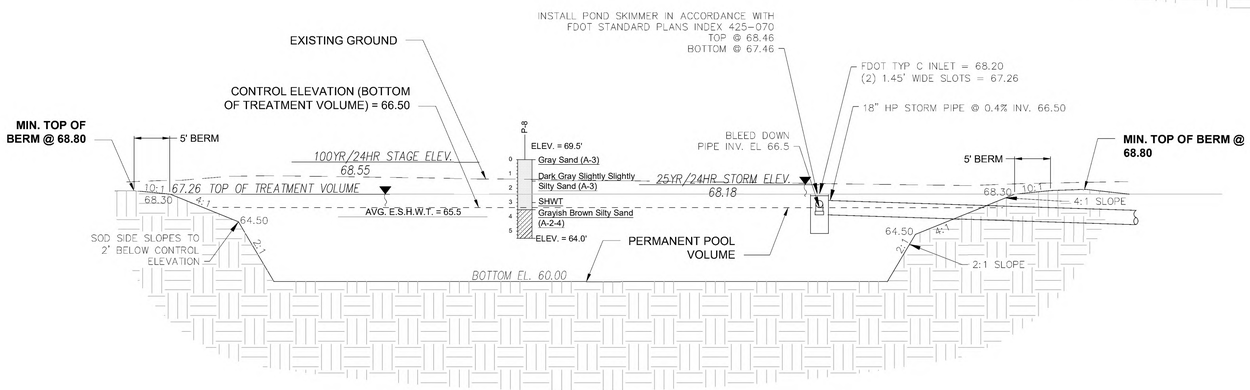

Section C-C
D.D.A. 3.0
Not To Scale

NOTE: SOD ALL SIDE SLOPES, BERMS AND DRA BOTTOM.

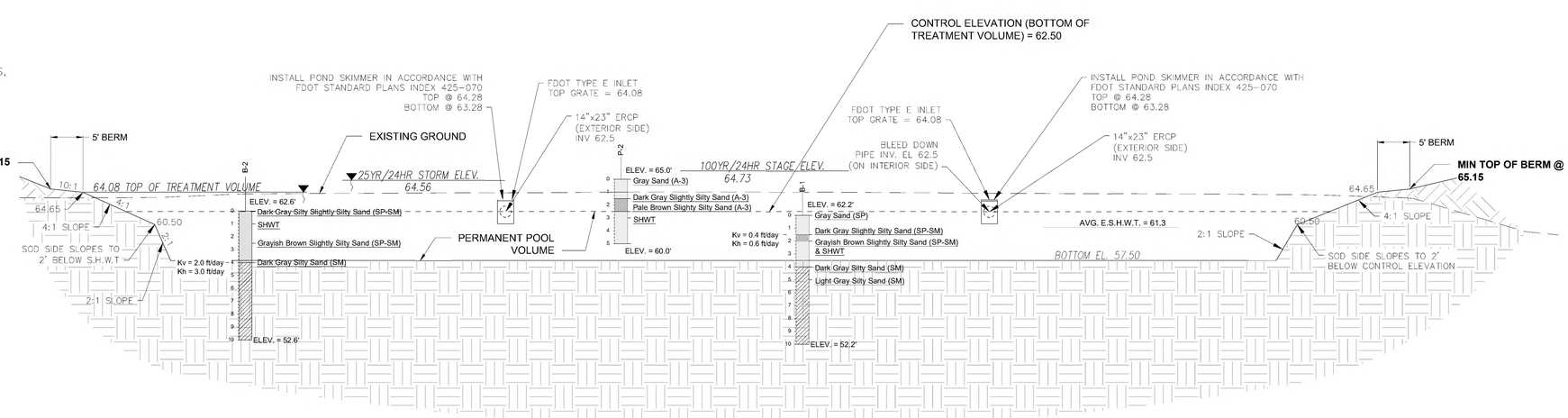

Section D-D
D.D.A. 4.0
Not To Scale

NOTE: SOD ALL SIDE SLOPES, THIS WILL BE PERMANENTLY WET

Date:	By:	Revisions:
3/27/23	BIL	REVISED PER OT OF DELAND COMMENTS

Designed: MWR
Drawn: BIL
Checked: MWR
Scale: 1" = 100'
Project: 2022-04
Date: 10-14-2022
File: Meadowlea Village Ph. 4-7.dwg

MICHAEL W. RADCLIFFE ENGINEERING, INC.
3211 S.E. Lake Weir Avenue Ocala, FL 34471 (352) 629-5500 FAX (352) 629-1010
Certificate No. EB-0006198 • Michael W. Radcliffe P.E. #31170 • Christopher A. Gwin P.E. #66568
www.radcliffeengineering.com

COPYRIGHT © 2023 Michael W. Radcliffe Engineering, Inc. All Rights Reserved.

Project Name: Meadowlea Village Ph. 4&5
Sheet Name: DDA Sections

Sheet No.
C004
of
C021

X:\MWE Projects\Meadowlea MHP\2022-04 Meadowlea Village Ph. 4-7\Design\CADD\Meadowlea Village Ph. 4-7.dwg 3/28/2023 2:45 PM

GRAPHIC SCALE

(IN FEET)
1 inch = 50 ft.

Meadowlea Village
A COVE COMMUNITY

MEADOWLEA MHP - PH. 4-7 SITE PLAN
CITY OF DELAND, FLORIDA

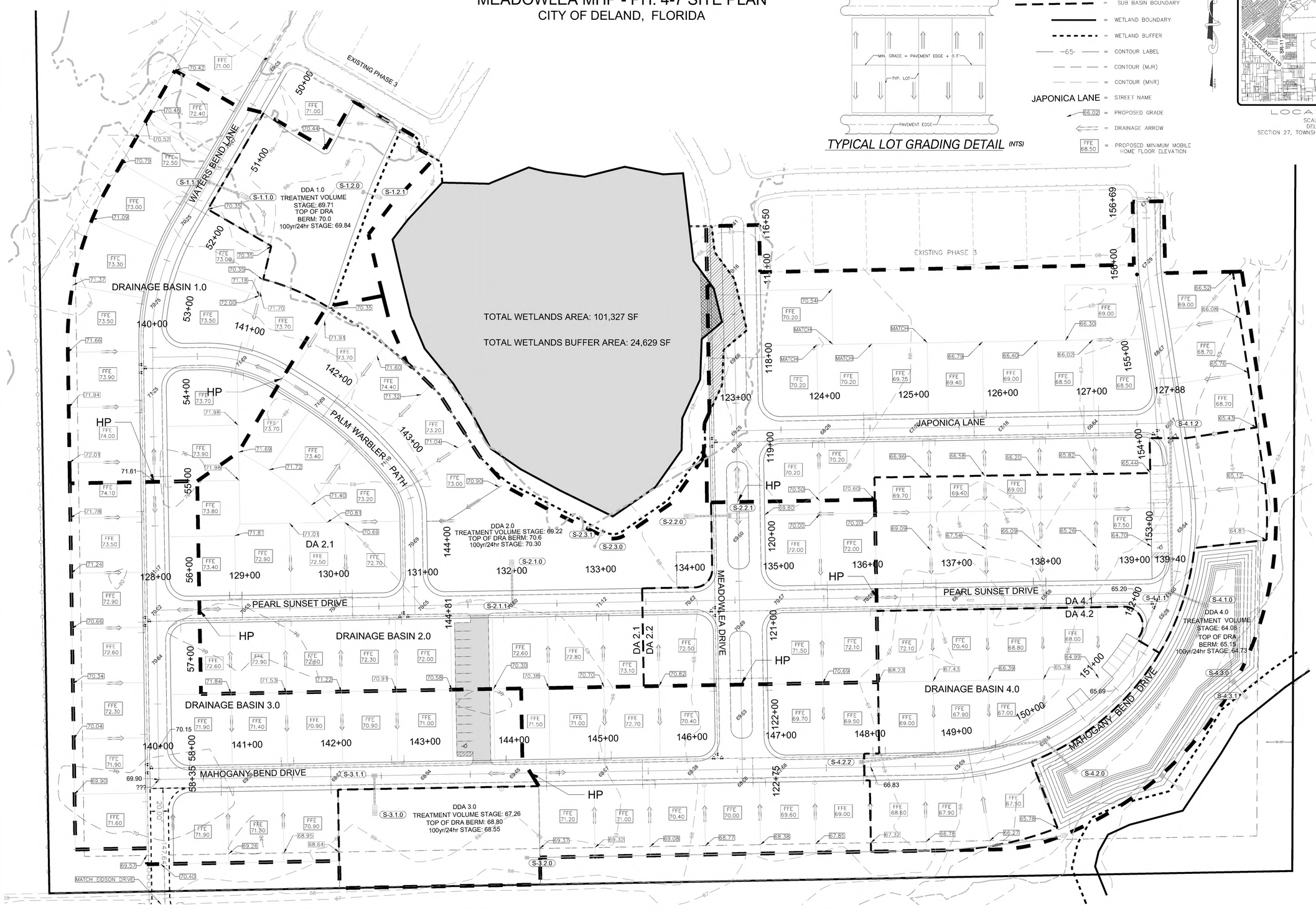

Legend:

- DRAINAGE BASIN BOUNDARY
- SUB BASIN BOUNDARY
- WETLAND BOUNDARY
- WETLAND BUFFER
- 65 — CONTOUR LABEL
- CONTOUR (MJR)
- CONTOUR (MNR)
- JAPONICA LANE — STREET NAME
- 66.02 — PROPOSED GRADE
- DRAINAGE ARROW
- FFE 68.50 — PROPOSED MINIMUM MOBILE HOME FLOOR ELEVATION

TYPICAL LOT GRADING DETAIL (NTS)

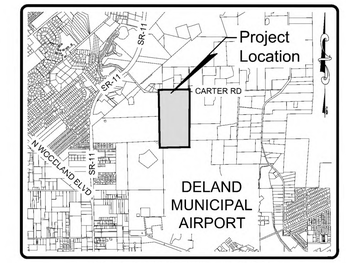

LOCATION MAP
SCALE: 1" = 4000'
DELAND, FLORIDA
SECTION 27, TOWNSHIP 16 SOUTH, RANGE 30 EAST

Date:	By:	Revisions:
3/27/23	BIL	REVISED PER CIT OF DELAND COMMENTS.

Designed: MWR
Drawn: BIL
Checked: MWR
Scale: 1" = 50'
Project: 2022-04
Date: 10-14-2022
File: Meadowlea Village Ph. 4-7.dwg

MICHAEL W. RADCLIFFE ENGINEERING, INC.
2611 S.E. Lake Weir Avenue Ocala, FL 34471 (352) 629-5500 FAX (352) 629-1010
Certificate No. EB-0005198 • Michael W. Radcliffe P.E. #31170 • Christopher A. Gwin P.E. #69568
www.radcliffeengineering.com

Copyright © 2023 Michael W. Radcliffe Engineering, Inc. All Rights Reserved.

Project Name: Meadowlea Village Ph. 4&5

Sheet Name: Grading Plan

Sheet No. C005 of C021

X:\MWRE Projects\Meadowlea MHP\2022-04 Meadowlea Village Ph. 4-7\Design\CADD\Meadowlea Village Ph. 4-7.dwg 3/28/2023 2:54 PM

Meadowlea Village
A COVE COMMUNITY

GRAPHIC SCALE
50 0 25 50 100 200
(IN FEET)
1 inch = 50 ft.

Legend:

- TREE PROTECTION AREA
- WETLAND BOUNDARY
- WETLAND BUFFER
- JAPONICA LANE — PROPOSED STREET NAME
- PROPOSED FIRE HYDRANT
- PHASE LINE
- FEMA ZONES

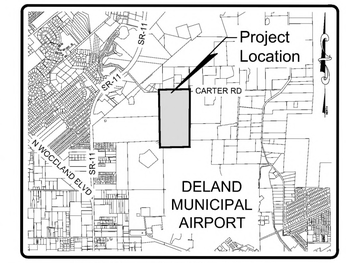

LOCATION MAP
SCALE: 1" = 4000'
DELAND, FLORIDA
SECTION 27, TOWNSHIP 16 SOUTH, RANGE 30 EAST

Revisions:			
Date:	By:		
3/27/23	BIL	REVISED PER CIT OF DELAND COMMENTS	

Designed: MWR
Drawn: BIL
Checked: MWR
Scale: 1" = 50'
Project: 2022-04
Date: 10-14-2022
File: Meadowlea Village Ph. 4-7.dwg

MICHAEL W. RADCLIFFE ENGINEERING, INC.
2811 S.E. Lake Weir Avenue Ocala, FL 34471 (352) 629-5500 FAX (352) 629-1010
Certificate No. EB-0006198 • Michael W. Radcliffe P.E. #31170 • Christopher A. Gwin P.E. #60568
www.radcliffeengineering.com

Copyright © 2023 Michael W. Radcliffe Engineering, Inc. All Rights Reserved

Project Name: Meadowlea Village Ph. 4&5
Sheet Name: Proposed Phase IV & V

Sheet No.
C006
of
C021

X:\MWRE Projects\Meadowlea Ph\PD2022-04 Meadowlea Village Ph. 4-7\Design\CADD\Meadowlea Village Ph. 4-7.dwg 3/28/2023 1:06 PM

Meadowlea Village
A COVE COMMUNITY

GRAPHIC SCALE
60 0 30 60 120 240
(IN FEET)
1 inch = 60 ft.

Legend:

-65-	CONTOUR LABEL
	FEMA ZONES
	WETLAND BOUNDARY
	WETLAND BUFFER
	CONTOUR (MJR)
	CONTOUR (MNR)
JAPONICA LANE	PROPOSED STREET NAME
	PROPOSED FIRE HYDRANT
	PROPOSED MANHOLE
	PROPOSED DOUBLE SEWER SERVICES
	PROPOSED DOUBLE WATER SERVICES

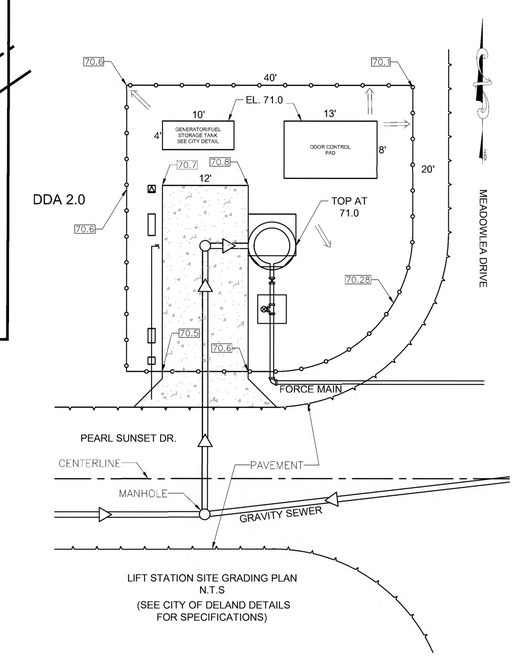

LIFT STATION SITE GRADING PLAN
N.T.S
(SEE CITY OF DELAND DETAILS FOR SPECIFICATIONS)

Date:	By:	Revisions:
3/27/23	BIL	REVISED PER CIT OF DELAND COMMENTS.

Designed: MWR
Drawn: BIL
Checked: MWR
Scale: 1" = 60'
Project: 2022-04
Date: 10-14-2022
File: Meadowlea Village Ph. 4-7.dwg

MICHAEL W. RADCLIFFE ENGINEERING, INC.
3911 S.E. Lake Weir Avenue Ocala, FL 34471 (352) 629-5500 FAX (352) 629-1010
Certificate No. EB-0006198 • Michael W. Radcliffe P.E. #31170 • Christopher A. Gwin P.E. #69568

COPYRIGHT © 2023 Michael W. Radcliffe Engineering, Inc. All Rights Reserved

Project Name: Meadowlea Village Ph. 4&5
Sheet Name: Utility Plan

Sheet No.
C007
of
C021

X:\MWRE Projects\Meadowlea MVP\2022-04 Meadowlea Village Ph. 4-7\Design\CAD\Meadowlea Village Ph. 4-7.dwg 3/28/2023 1:06 PM

Meadowlea Village
A COVE COMMUNITY

GRAPHIC SCALE
60 0 30 60 120 240
(IN FEET)
1 inch = 60 ft.

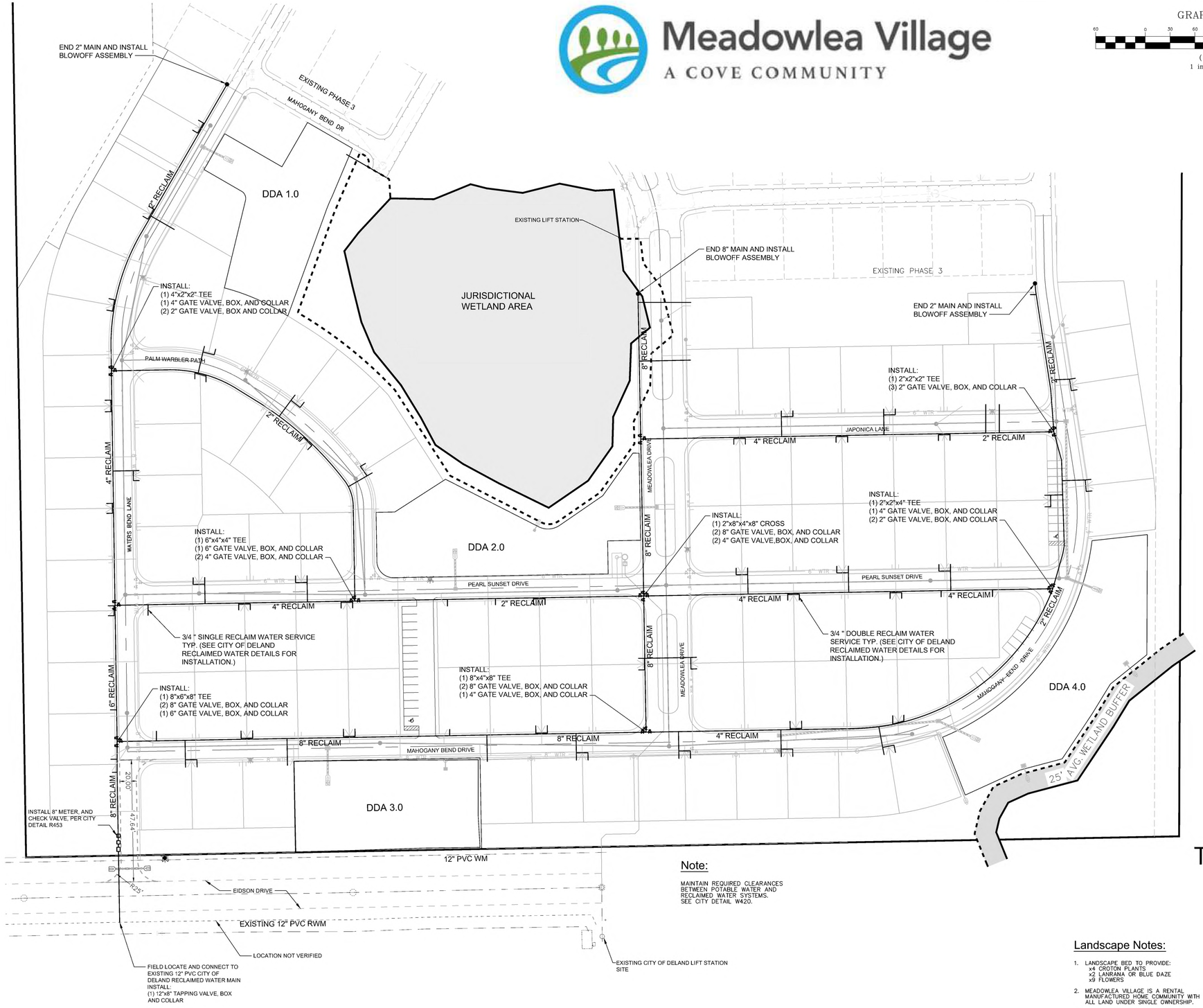

Legend:

- WETLAND BOUNDARY
- WETLAND BUFFER
- JAPONICA LANE — PROPOSED STREET NAME
- PROPOSED FIRE HYDRANT
- PROPOSED MANHOLE
- PROPOSED DOUBLE SEWER SERVICES
- PROPOSED DOUBLE WATER SERVICES
- PROPOSED DOUBLE RECLAIM SERVICES
- WV — PROPOSED WATER VALVE

Note:

MAINTAIN REQUIRED CLEARANCES BETWEEN POTABLE WATER AND RECLAIMED WATER SYSTEMS. SEE CITY DETAIL W420.

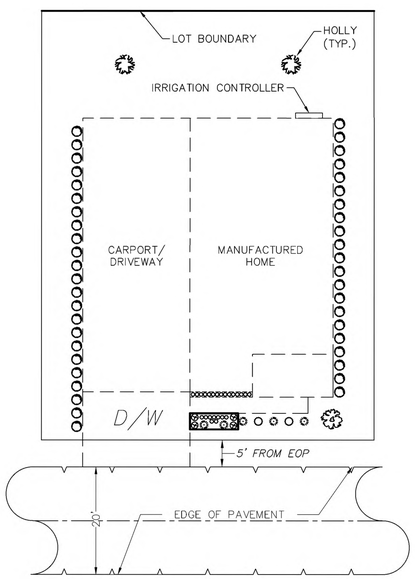

TYPICAL LOT LANDSCAPING

Not To Scale

MINIMUM TREE PLANTING SIZE PER CITY OF DELAND MUNICODE SEC.33-57.05(b)2

Landscape Notes:

1. LANDSCAPE BED TO PROVIDE:
   x4 CROTON PLANTS
   x2 LANRANA OR BLUE DAZE
   x9 FLOWERS
2. MEADOWLEA VILLAGE IS A RENTAL MANUFACTURED HOME COMMUNITY WITH ALL LAND UNDER SINGLE OWNERSHIP.
3. WATER/SEWER FOR EXISTING PHASES 1-3 IS PROVIDED BY MEADOWLEA VILLAGE

PLANT / TREE LEGEND	
LIVE OAK (x1)	
AMERICAN HOLLY (x2)	
FLOWERS (x24)	
LANTANA OR BLUE DAZE (x6)	
PODOCARPUS (x44)	
TY PLANT (x4)	
CROTON PLANT (x4)	

Date:	By:	Revisions:
2/20/23	BIL	REVISED PER OIT OF DELAND COMMENTS.

Designed: MWR
Drawn: BIL
Checked: MWR
Scale: 1" = 60'
Project: 2022-04
Date: 10-14-2022
File: Meadowlea Village Ph. 4-7.dwg

MICHAEL W. RADCLIFFE ENGINEERING, INC.
2611 S.E. Lake Weir Avenue Ocala, FL 34471 (352) 629-5500 FAX: (352) 629-1010
Certificate No. EB-0006198 • Michael W. Radcliffe P.E. #31170 • Christopher A. Gwin P.E. #66568

COPYRIGHT © 2023 Michael W. Radcliffe Engineering, Inc. all Rights Reserved

Project Name: Meadowlea Village Ph. 4&5
Sheet Name: Landscape/Irrigation Plan

Sheet No.
C007 of C020

X:\MWRE Projects\Meadowlea MHP\2022-04 Meadowlea Village Ph. 4-7\Design\CADD\Meadowlea Village Ph. 4-7.dwg 2/20/2023 11:14 PM

Meadowlea Village
A COVE COMMUNITY

GRAPHIC SCALE
60 0 30 60 120 240
(IN FEET)
1 inch = 60 ft.

Note:

MAINTAIN REQUIRED CLEARANCES BETWEEN POTABLE WATER AND RECLAIMED WATER SYSTEMS. SEE CITY DETAIL W420.

Legend:

- WETLAND BOUNDARY
- WETLAND BUFFER
- JAPONICA LANE — PROPOSED STREET NAME
- PROPOSED FIRE HYDRANT
- PROPOSED MANHOLE
- PROPOSED DOUBLE SEWER SERVICES
- PROPOSED DOUBLE WATER SERVICES
- PROPOSED DOUBLE RECLAIM SERVICES
- WV — PROPOSED WATER VALVE

Landscape Notes:

1. LANDSCAPE BED TO PROVIDE:
   x4 CROTON PLANTS
   x2 LANRANA OR BLUE DAZE
   x9 FLOWERS
2. MEADOWLEA VILLAGE IS A RENTAL MANUFACTURED HOME COMMUNITY WITH ALL LAND UNDER SINGLE OWNERSHIP.
3. TWO TREES TO BE PLANTED PER LOT: (102 LOTS X 2 TREES = 104 TREES)
4. WATER/SEWER FOR EXISTING PHASES 1-3 IS PROVIDED BY MEADOWLEA VILLAGE.
5. TREES TO BE PLANTED AT MINIMUM SIZE:
   3" CALIPER, 8" HEIGHT, 4' SPREAD, 45 GALLON.

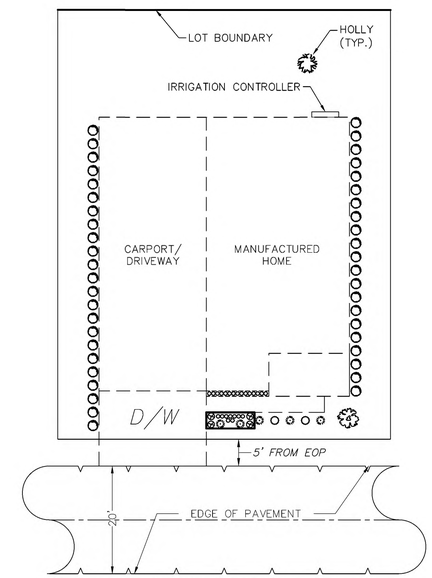

TYPICAL LOT LANDSCAPING

Not To Scale

MINIMUM TREE PLANTING SIZE PER CITY OF DELAND MUNICODE SEC.33-57.05(b)2

PLANT / TREE LEGEND	
LIVE OAK (x1)	
AMERICAN HOLLY (x2)	
FLOWERS (x24)	
LANTANA OR BLUE DAZE (x6)	
PODOCARPUS (x44)	
TY PLANT (x4)	
CROTON PLANT (x4)	

Revisions:			
Date:	By:		
3/27/23	BIL	REVISED PER OT OF DELAND COMMENTS.	

Designed: MWR
Drawn: BIL
Checked: MWR
Scale: 1" = 60'
Project: 2022-04
Date: 10-14-2022
File: Meadowlea Village Ph. 4-7.dwg

MICHAEL W. RADCLIFFE ENGINEERING, INC.
2631 S.E. Lake Weir Avenue Ocala, FL 34471 (352) 629-5500 FAX (352) 629-1010
Certificate No. EB-0006198 • Michael W. Radcliffe P.E. #31170 • Christopher A. Gwin P.E. #66558

Copyright © 2023 Michael W. Radcliffe Engineering, Inc. All Rights Reserved.

Project Name: Meadowlea Village Ph. 4&5
Sheet Name: Landscape/Irrigation Plan

Sheet No.
C007
of
C021

X:\MWRE Projects\Meadowlea MHP\2022-04 Meadowlea Village Ph. 4-7\Design\CAD\Meadowlea Village Ph. 4-7.dwg 3/28/2023 3:02 PM

Meadowlea Village
A COVE COMMUNITY

GRAPHIC SCALE
(IN FEET)
1 inch = 100 ft.

NOTES:

SEE SHEET M001 FOR TREE PROTECTION AREA CALC.

SEE SHEET C008 FOR TREE CHART

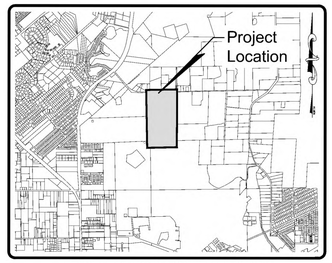

LOCATION MAP
SCALE: 1" = 4000'
DELAND, FLORIDA
SECTION 27, TOWNSHIP 16 SOUTH, RANGE 30 EAST

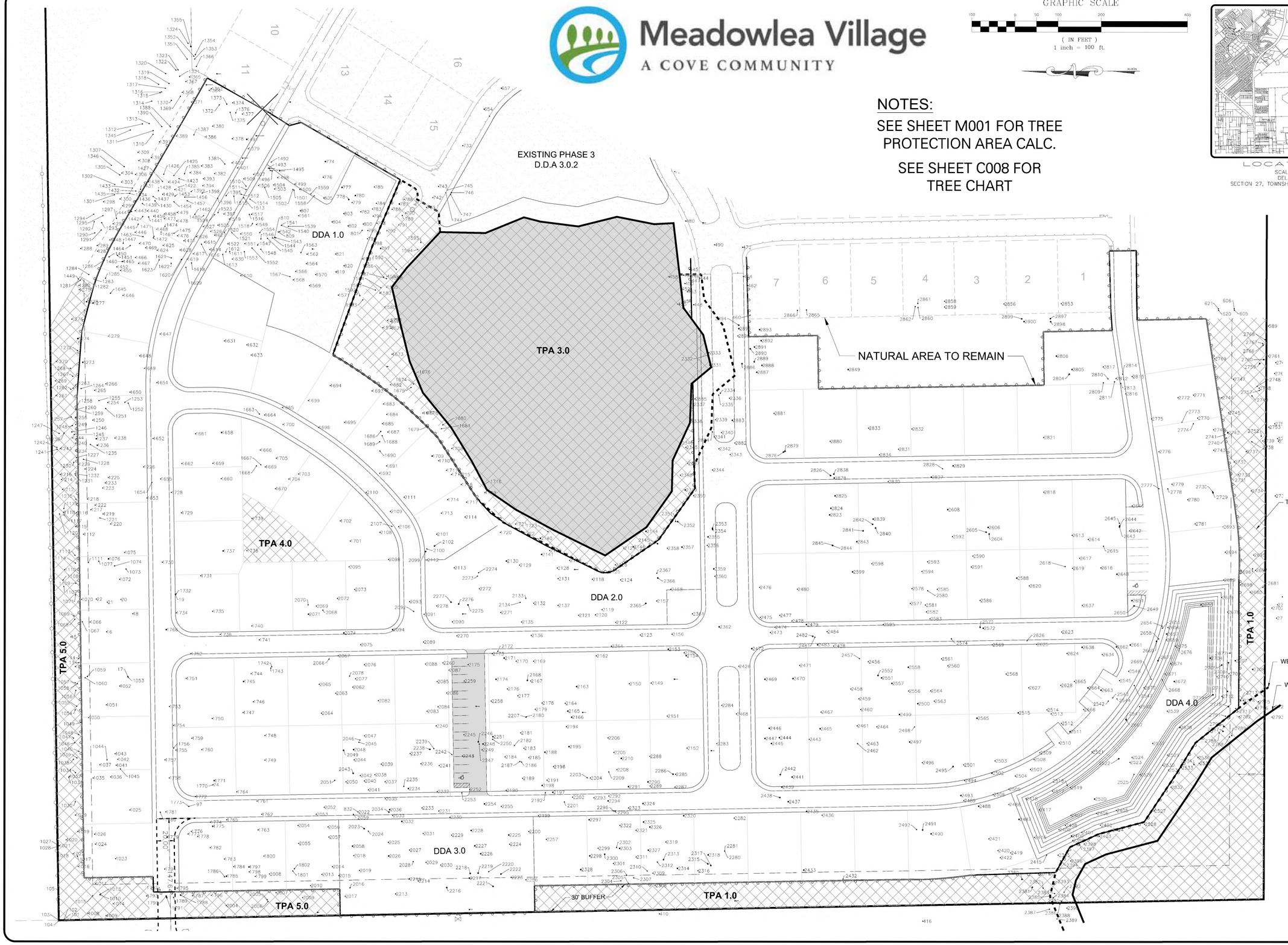

Date:	By:	Revisions:
3/27/23	BIL	REVISED PER CITY OF DELAND COMMENTS

Designed: MWR
Drawn: BIL
Checked: MWR
Scale: 1" = 50'
Project: 2022-04
Date: 10-14-2022
File: Meadowlea Village Ph. 4-7.dwg

MICHAEL W. RADCLIFFE ENGINEERING, INC.
2611 S.E. Lake Weir Avenue Ocala, FL 34471 (352) 629-5500 FAX (352) 629-1010
Certificate No. EB-0000199 Michael W. Radcliffe, P.E. #17189 Christopher A. Gwin, P.E. #66088
www.radcliffeengineering.com

COPYRIGHT © 2023 Michael W. Radcliffe Engineering, Inc. All Rights Reserved.

Project Name: Meadowlea Village Ph. 4&5
Sheet Name: Tree Plan

Sheet No.
C008
of
C021

Point Table

Point #	Raw Description
1	22 INCH PINE
2	CHINESE TALLOW
12	16 INCH PINE
13	9 INCH PINE
14	18IN SLASH PINE
15	14 INCH PINE
16	17 INCH PINE
*1049	19 LONGLEAF PINE
1050	14 INCH PINE
1051	15 INCH PINE
1052	17 INCH PINE
1053	16 INCH PINE
1054	16 INCH PINE
1055	14 INCH PINE
1056	14 INCH PINE
1057	9 INCH PINE
1058	14 INCH PINE
1059	13 INCH PINE
1060	6 INCH PINE
1066	13 INCH PINE
1067	13 INCH PINE
1068	11 INCH PINE
1069	18 INCH SLASH PINE
1070	13 INCH PINE
1071	15 INCH PINE
1072	9 INCH PINE
1073	16 INCH PINE
1074	15 INCH PINE
1075	14 INCH PINE
1076	9 INCH OAK
1077	16 INCH PINE
1107	16 INCH PINE
1108	13 INCH PINE
1109	16 INCH PINE
1110	14 INCH PINE
1111	14 INCH PINE
1112	14 INCH PINE
1113	14 INCH PINE DEAD
1114	14 INCH PINE DEAD
1115	20 INCH SLASH PINE
1116	9 INCH PINE
1117	10 7 INCH TWIN PINE
1118	6 INCH UNKNOWN
1119	17 6 INCH TWIN PINE
1120	14 INCH PINE
1212	13 INCH PINE
1214	8 INCH PINE
1215	14 INCH PINE
1216	7 INCH PINE
1217	15 INCH PINE
1218	14 INCH PINE
1219	13 INCH PINE
1220	13 INCH PINE
1221	10 INCH PINE
1222	15 INCH PINE
1223	17 INCH PINE
1224	9 INCH PINE
1225	15 INCH PINE
1226	21 INCH SLASH PINE
1227	10 INCH PINE
1228	13 INCH PINE
1229	9 INCH PINE
1230	6 16 INCH PINE TWIN
1231	7 15 INCH PINE TWIN
1232	7 INCH PINE
1233	9 INCH PINE
1234	11 INCH PINE
1235	17 INCH PINE
1236	6 INCH BAY
1237	6 INCH BAY
1238	16 INCH PINE
1239	16 INCH PINE
1240	10 4 4 INCH PINE TRIPLE
1241	8 INCH PINE
1242	11 INCH PINE
1243	18 INCH SLASH PINE
1244	14 INCH PINE
1245	9 INCH PINE
1246	7 INCH PINE
1247	12 INCH PINE
1248	10 INCH PINE
1249	11 INCH PINE
1250	17 INCH PINE
1251	16 INCH PINE
1252	18 INCH SLASH PINE
1253	16 INCH PINE

Point Table

Point #	Raw Description
1043	15 INCH PINE
1044	8 INCH PINE
1045	10 INCH PINE
1046	15 INCH PINE
1047	12 INCH PINE
1048	14 INCH PINE
*1049	19 LONGLEAF PINE
1050	14 INCH PINE
1051	15 INCH PINE
1052	17 INCH PINE
1053	16 INCH PINE
1054	16 INCH PINE
1055	14 INCH PINE
1056	14 INCH PINE
1057	9 INCH PINE
1058	14 INCH PINE
1059	13 INCH PINE
1060	6 INCH PINE
1066	13 INCH PINE
1067	13 INCH PINE
1068	11 INCH PINE
1069	18 INCH SLASH PINE
1070	13 INCH PINE
1071	15 INCH PINE
1072	9 INCH PINE
1073	16 INCH PINE
1074	15 INCH PINE
1075	14 INCH PINE
1076	9 INCH OAK
1077	16 INCH PINE
1107	16 INCH PINE
1108	13 INCH PINE
1109	16 INCH PINE
1110	14 INCH PINE
1111	14 INCH PINE
1112	14 INCH PINE
1113	14 INCH PINE DEAD
1114	14 INCH PINE DEAD
1115	20 INCH SLASH PINE
1116	9 INCH PINE
1117	10 7 INCH TWIN PINE
1118	6 INCH UNKNOWN
1119	17 6 INCH TWIN PINE
1120	14 INCH PINE
1212	13 INCH PINE
1214	8 INCH PINE
1215	14 INCH PINE
1216	7 INCH PINE
1217	15 INCH PINE
1218	14 INCH PINE
1219	13 INCH PINE
1220	13 INCH PINE
1221	10 INCH PINE
1222	15 INCH PINE
1223	17 INCH PINE
1224	9 INCH PINE
1225	15 INCH PINE
1226	21 INCH SLASH PINE
1227	10 INCH PINE
1228	13 INCH PINE
1229	9 INCH PINE
1230	6 16 INCH PINE TWIN
1231	7 15 INCH PINE TWIN
1232	7 INCH PINE
1233	9 INCH PINE
1234	11 INCH PINE
1235	17 INCH PINE
1236	6 INCH BAY
1237	6 INCH BAY
1238	16 INCH PINE
1239	16 INCH PINE
1240	10 4 4 INCH PINE TRIPLE
1241	8 INCH PINE
1242	11 INCH PINE
1243	18 INCH SLASH PINE
1244	14 INCH PINE
1245	9 INCH PINE
1246	7 INCH PINE
1247	12 INCH PINE
1248	10 INCH PINE
1249	11 INCH PINE
1250	17 INCH PINE
1251	16 INCH PINE
1252	18 INCH SLASH PINE
1253	16 INCH PINE

Point Table

Point #	Raw Description
1254	9 INCH PINE
1255	15 INCH PINE
1256	8 INCH PINE
1257	12 INCH PINE
1258	7 INCH PINE
1259	6 INCH PINE
1260	6 INCH PINE
1261	14 INCH PINE
1262	8 INCH PINE
1263	15 INCH PINE
1264	10 INCH PINE
1265	17 INCH PINE
1266	13 INCH PINE
1267	8 INCH PINE
1268	9 INCH PINE
1269	19 INCH SLASH PINE
1270	16 INCH PINE
1272	17 INCH LONGLEAF PINE
1273	6 INCH HOLLY
1274	10 INCH HOLLY
1275	9 INCH PINE
1276	13 INCH PINE
1277	8 INCH HOLLY
1278	8 INCH HOLLY
*1279	20 INCH LONGLEAF PINE
1280	8 INCH PINE
1281	15 16 INCH PINE TWIN
1282	15 INCH PINE
1283	7 INCH PINE
1284	6 INCH PINE
1285	17 INCH PINE
1286	10 INCH PINE
1287	8 INCH PINE
1288	9 8 4 INCH PINE TRIPLE
1289	14 8 INCH PINE TWIN
1290	9 INCH PINE
1291	8 INCH PINE
1292	12 INCH PINE
1293	14 INCH PINE
1294	9 INCH PINE
1295	9 INCH PINE
1296	6 INCH PINE
1297	8 INCH PINE
1298	7 INCH PINE
1299	10 INCH PINE
1300	9 INCH PINE
1301	11 INCH PINE
1302	8 INCH PINE
1303	10 INCH PINE
1304	7 INCH PINE
1305	6 INCH PINE
1306	8 INCH PINE
1307	12 INCH PINE
1308	10 INCH PINE
1309	16 INCH PINE
1310	15 INCH PINE
1311	11 INCH PINE
1312	14 INCH PINE
1313	10 INCH PINE
1314	12 INCH PINE
1315	8 INCH PINE
1316	6 INCH PINE
1317	12 INCH PINE
1318	8 INCH PINE
1319	12 INCH PINE
1320	15 INCH PINE
1321	12 INCH PINE
1322	9 INCH PINE
1323	9 INCH PINE
1324	9 INCH PINE
1345	12 INCH PINE
1346	10 INCH PINE
1351	9 INCH PINE
1352	8 INCH PINE
1353	10 INCH PINE
1354	15 INCH PINE
1355	9 INCH OAK
1362	17 INCH PINE
1363	7 INCH CHINA BERRY
1364	11 INCH PINE
1365	7 INCH PINE
1366	12 INCH PINE
1367	12 INCH PINE
1368	7 INCH PINE
1369	10 INCH PINE

Point Table

Point #	Raw Description
1370	14 INCH PINE
1371	15 INCH PINE
1372	9 INCH PINE
1373	14 INCH PINE
1374	9 INCH PINE
1375	12 INCH PINE
1376	11 INCH PINE
1377	17 INCH PINE
1378	10 INCH PINE
1379	9 INCH PINE
1380	12 INCH PINE
1381	17 INCH PINE
1382	11 INCH PINE
1383	12 INCH PINE
1384	8 INCH PINE
1385	12 INCH PINE
1386	8 INCH PINE
1387	14 INCH PINE
1388	9 INCH PINE
1389	14 INCH PINE
1390	12 INCH PINE
1391	12 INCH PINE
1392	14 INCH PINE
1393	10 INCH PINE
1394	12 INCH PINE
1395	10 INCH PINE
1396	14 INCH PINE
1397	10 INCH PINE
1398	11 INCH PINE
1399	13 INCH PINE
1400	9 INCH PINE
1401	12 INCH PINE
1421	8 INCH PINE
1422	13 INCH PINE
1423	8 INCH PINE
1424	10 INCH PINE
1425	9 INCH PINE
1426	13 INCH PINE
1427	8 INCH PINE
1428	12 INCH PINE
1429	8 INCH PINE
1430	10 INCH PINE
1431	12 INCH PINE
1432	7 INCH PINE
1433	11 INCH PINE
1434	10 INCH PINE
1435	6 INCH PINE
1436	6 INCH PINE
1437	6 INCH PINE
1438	6 INCH PINE
1439	9 INCH PINE
1440	12 INCH PINE
1441	9 INCH PINE
1442	6 INCH PINE
1443	9 INCH PINE
1444	9 INCH PINE
1445	10 INCH PINE
1446	10 INCH PINE
1447	12 INCH PINE
1448	7 INCH PINE
1449	7 INCH PINE
1450	12 INCH PINE
1451	6 INCH PINE
1452	12 INCH PINE
1453	9 INCH PINE
1454	9 INCH PINE
1455	11 INCH PINE
1456	10 INCH PINE
1457	10 INCH PINE
1458	10 INCH PINE
1459	9 INCH PINE
1460	12 INCH PINE
1461	9 INCH PINE
1462	12 INCH PINE
1463	11 INCH PINE
1464	8 INCH PINE
1465	6 INCH PINE
1466	10 INCH PINE
1467	12 INCH PINE
1468	12 INCH PINE
1469	12 INCH PINE
1470	6 INCH PINE
1471	10 INCH PINE
1472	6 INCH PINE
1473	8 INCH PINE

Point Table

Point #	Raw Description
1474	9 INCH PINE
1475	10 INCH PINE
1476	10 INCH PINE
1477	9 INCH PINE
1478	12 INCH PINE
1479	10 INCH PINE
1480	10 INCH PINE
1491	7 INCH HOLLY
1492	6 INCH PINE
1493	22 INCH PINE
1494	6 INCH CAMPHOR
1495	7 INCH PINE
1496	7 INCH PINE
1497	8 INCH CAMPHOR
1498	13 INCH PINE
1499	13 INCH PINE
1500	11 INCH PINE
1501	12 INCH PINE
1502	9 INCH PINE
1503	11 INCH PINE
1504	12 INCH PINE
1505	12 INCH PINE
1506	7 INCH PINE
1507	14 INCH PINE
1508	10 INCH CAMPHOR
1509	12 INCH PINE
1510	9 INCH PINE
1511	12 INCH PINE
1512	10 INCH PINE
1513	7 INCH PINE
1514	12 INCH PINE
1515	12 INCH PINE
1516	10 INCH PINE
1517	10 INCH PINE
1518	9 INCH PINE
1519	11 INCH PINE
1520	10 INCH PINE
1521	11 INCH PINE
1522	11 INCH PINE
1523	9 INCH PINE
1524	9 INCH PINE
1525	11 INCH PINE
1526	6 INCH PINE
1527	11 INCH PINE
1539	7 INCH PINE
1540	15 INCH PINE
1541	15 INCH PINE
1542	16 INCH SLASH PINE
1543	18 INCH PINE
1544	6 INCH PINE
1545	12 INCH PINE
1546	10 INCH PINE
1547	10 INCH PINE
1548	6 INCH PINE
1549	10 INCH PINE
1550	10 INCH PINE
1551	14 INCH PINE
1553	14 INCH PINE
1554	6 INCH PINE
1558	18 INCH SLASH PINE
1559	8 INCH PINE
1561	7 INCH PINE
1562	7 INCH PINE
1563	6 INCH PINE
1564	7 INCH PINE
1566	7 INCH PINE
1567	6 INCH PINE
1568	8 INCH PINE
1569	7 INCH PINE
1570	7 INCH PINE
1571	7 INCH UNKNOWN
1576	7 INCH PINE
1577	13 INCH PINE
1578	7 INCH UNKNOWN
*1579	14 LOBLOLLY BAY
1580	6 INCH UNKNOWN
1581	6 INCH UNKOWN
1582	7 INCH PINE
1583	8 INCH PINE
1584	7 INCH PINE
1585	8 INCH UNKNOWN
1586	6 INCH PINE
1587	7 INCH PINE
1588	8 INCH PINE
1589	6 INCH UNKNOWN

Point Table

Point #	Raw Description
1590	9 INCH PINE
1592	7 INCH PINE
1593	9 INCH PINE
1594	14 INCH PINE
1595	14 INCH PINE
1610	8 INCH PINE
1611	7 INCH PINE
1612	6 INCH PINE
1613	15 INCH PINE
1614	7 INCH PINE
1615	11 INCH PINE
1616	11 INCH PINE
1617	7 INCH PINE
1618	7 INCH PINE
1619	12 INCH PINE
1620	12 INCH PINE
1621	8 INCH PINE
1622	6 INCH PINE
1623	12 INCH PINE
1624	9 INCH PINE
1625	9 INCH PINE
1626	10 INCH PINE
1627	8 INCH PINE
1628	10 INCH PINE
1629	10 INCH PINE
1630	7 INCH PINE
1631	6 INCH PINE
1632	8 INCH PINE
1633	10 INCH PINE
1645	12 INCH PINE
1646	11 INCH PINE
1647	15 INCH PINE
1649	16 INCH SLASH PINE
1650	12 INCH PINE
1651	12 INCH PINE
1652	17 INCH PINE
1653	11 INCH PINE
1654	16 INCH PINE
1655	15 INCH PINE
*1658	MULTI 12 13 14 VIRGINIA LIVE OAK
1659	12 INCH PINE
1660	12 INCH PINE
1661	10 INCH PINE
1662	23 INCH SLASH PINE
1663	7 INCH PINE
1664	15 INCH PINE
*1665	22 INCH LONGLEAF PINE
1666	10 INCH PINE
1667	14 INCH PINE
1668	13 INCH PINE
1669	9 INCH PINE
1670	16 INCH PINE
1673	17 INCH PINE
1674	16 INCH PINE
1675	8 INCH PINE
1676	MULTI 10 10 8 PINE
1677	10 INCH PINE
1678	7 INCH UNKNOWN
1679	16 INCH PINE
1680	11 INCH PINE
1681	12 INCH PINE
1682	8 INCH UNKNOWN
1683	15 INCH PINE
1684	13 INCH PINE
1685	12 INCH PINE
1686	10 INCH PINE
1687	14 INCH PINE
1688	9 INCH PINE
1689	11 INCH PINE
1690	15 INCH PINE
1691	7 INCH UNKNOWN
*1692	20 LONGLEAF PINE
1693	MULTI 10 8 8 DAHOON HOLLY
1694	17 INCH LONGLEAF PINE
*1695	19 INCH LONGLEAF PINE
*1696	20 INCH LONGLEAF PINE
1699	12 INCH LAUREL OAK
1700	8 INCH PINE
1701	12 INCH PINE
1702	11 INCH PINE
1703	14 INCH PINE
1704	8 INCH PINE
1705	10 INCH PINE
1708	10 INCH PINE
1709	TWIN 8 8 MAGNOLIA

Point Table

Point #	Raw Description
1710	17 INCH PINE
1711	7 INCH PINE
1712	8 INCH PINE
1713	15 INCH PINE
1714	12 INCH PINE
1715	14 INCH PINE
1716	10 INCH PINE
1717	17 LONGLEAF PINE
1718	9 INCH PINE
1719	13 INCH PINE
*1720	20 LONGLEAF PINE
1721	10 DAHOON HOLLY
1722	17 INCH PINE
1723	17 INCH PINE
1728	19 INCH SLASH PINE
1729	22 INCH SLASH PINE
1730	20 INCH SLASH PINE
1731	13 INCH PINE
1732	14 INCH PINE
1734	17 INCH PINE
1735	17 INCH PINE
1736	13 INCH PINE
1737	6 INCH OAK
1738	19 INCH PINE
1739	13 INCH PINE
1740	12 INCH PINE
1741	9 INCH PINE
1742	6 INCH PINE
1743	10 INCH PINE
1744	15 INCH PINE
1745	7 INCH OAK
1746	13 INCH PINE
1747	11 INCH PINE
1748	8 INCH PINE
1749	11 INCH PINE
1750	20 INCH POND PINE
1751	14 INCH PINE
1752	10 INCH PINE
1753	10 INCH PINE
1754	8 INCH PINE
1755	8 INCH PINE
1756	14 INCH PINE
1757	11 INCH PINE
1758	8 INCH PINE
1759	9 INCH PINE
1760	8 INCH PINE
1761	14 INCH PINE
1762	14 INCH PINE
1763	TWIN 12 12 PINE
1764	8 INCH PINE
1765	11 INCH PINE
1766	12 INCH LAUREL OAK
1770	14 IN PINE
1772	16 IN PINE
1773	6 IN PINE
1774	14 IN PINE
1775	7 IN OAK
1776	9 IN PINE
1777	10 IN PINE
1778	8 IN PINE
1780	8 IN PINE
1781	13 IN PINE
1782	13 IN PINE
1783	13 IN PINE
1784	10 IN PINE
1786	12 IN PINE
1787	9 IN PINE
1788	6 INCH HOLLY
1789	11 IN PINE
1790	7 INCH BAY
1791	6 INCH BAY
1792	11 IN PINE
1793	12 IN PINE
1794	14 IN PINE
1795	13 IN PINE
1796	13 IN PINE
1798	6 IN PINE
1799	17 IN PINE
1800	10 IN PINE
1801	8 IN PINE
1802	10 IN PINE
2004	20 INCH SLASH PINE
2005	9 INCH PINE
2006	12 INCH PINE
2007	10 INCH PINE

Point Table

Point #	Raw Description
2008	7 INCH PINE
2009	7 INCH PINE
2010	16 INCH SLASH PINE
2013	17 INCH PINE
2014	17 INCH PINE
2015	15 INCH PINE
2016	13 INCH PINE
2017	17 INCH LONGLEAF PINE
2018	15 INCH PINE
2019	6 INCH PINE
2022	7 INCH PINE
2023	6 INCH OAK
2024	9 INCH PINE
2025	10 INCH PINE
2026	6 INCH OAK
2027	14 INCH PINE
2028	17 INCH PINE
2029	13 INCH PINE
2030	14 INCH PINE
2031	14 INCH PINE
2033	12 INCH PINE
2034	7 INCH OAK
2035	14 INCH PINE
2036	6 INCH LAUREL OAK
2037	12 INCH PINE
2038	10 INCH PINE
2039	7 INCH PINE
2040	10 INCH PINE
2041	12 INCH PINE
2042	13 INCH PINE
2044	11 INCH PINE
2045	11 INCH PINE
2046	7 INCH PINE
2047	9 INCH PINE
2048	7 INCH OAK
2050	11 INCH PINE
2051	10 INCH PINE
2052	15 INCH PINE
2053	9 INCH PINE
2054	10 INCH PINE
*2055	20 INCH LONGLEAF PINE
2056	10 INCH PINE
2057	9 INCH PINE
2058	6 INCH HOLLY
2059	9 INCH PINE
2062	13 INCH PINE
2063	12 INCH PINE
2064	15 INCH PINE
2065	16 INCH PINE
2066	16 INCH PINE
2067	12 INCH PINE
2068	15 INCH PINE
2069	13 INCH PINE
2070	14 INCH PINE
2072	8 INCH PINE
2073	17 INCH PINE
2074	12 INCH OAK
*2075	23 LONGLEAF PINE
2076	16 INCH LONGLEAF PINE
2077	9 INCH PINE
2078	9 INCH PINE
2082	9 INCH PINE
2083	14 INCH PINE
2084	10 INCH PINE
2085	12 INCH PINE
2086	12 INCH PINE
2087	17 INCH PINE
2088	17 INCH PINE
2089	8 INCH PINE
2090	13 INCH PINE
2091	7 INCH PINE
2092	7 INCH PINE
2093	13 INCH PINE
2095	8 INCH PINE
2098	13 INCH PINE
2099	8 INCH OAK
2100	16 INCH PINE
2101	13 INCH PINE
2106	15 INCH PINE
2107	16 INCH PINE
2108	8 INCH PINE
2109	8 INCH PINE
2110	12 INCH PINE
2111	9 INCH PINE
2112	13 INCH PINE

Point Table

Point #	Raw Description
2113	15 INCH PINE
2114	9 INCH PINE
2118	14 INCH PINE
2119	6 INCH PINE
2120	6 INCH PINE
2121	6 INCH PINE
2122	10 INCH PINE
2123	10 INCH PINE
2124	13 INCH PINE
2125	16 INCH PINE
2126	17 INCH PINE
2127	14 INCH PINE
2128	14 INCH PINE
2129	13 INCH PINE
2130	8 INCH HOLLY
2131	17 INCH PINE
2132	13 INCH PINE
2133	13 INCH PINE
2134	12 INCH PINE
2135	13 INCH PINE
2136	16 INCH PINE
2137	15 INCH PINE
2138	6 INCH PINE
2139	6 INCH PINE
2141	6 INCH OAK
2145	8 INCH OAK
2149	14 INCH PINE
*2150	22 INCH LONGLEAF PINE
2151	17 INCH PINE
2152	14 INCH PINE
*2155	22 INCH LONGLEAF PINE
*2156	18 INCH LONGLEAF PINE
2157	16 INCH PINE
2158	20 INCH SLASH PINE
*2162	21 INCH LONGLEAF PINE
2163	7 INCH BAY
*2164	19 INCH LONGLEAF PINE
2165	12 INCH LAUREL OAK
2166	8 INCH OAK
2167	13 INCH PINE
2168	10 INCH DAHOON HOLLY
2169	17 INCH PINE
2170	12 INCH PINE
2171	12 LAUREL OAK
2172	15 INCH PINE
2173	14 INCH PINE
2174	12 INCH LAUREL OAK
2175	15 INCH PINE
*2176	20 INCH LONGLEAF PINE
2177	15 INCH PINE
2178	12 INCH PINE
2179	16 INCH PINE
2180	14 INCH PINE
2181	14 INCH PINE
2182	14 INCH PINE
2183	13 INCH PINE
2184	14 INCH PINE
2185	15 INCH PINE
2186	13 INCH PINE
2187	8 INCH PINE
2188	7 INCH OAK
2189	14 INCH PINE
2190	17 INCH PINE
2191	16 INCH PINE
2192	10 INCH PINE
2193	16 INCH PINE
2194	17 INCH PINE
2195	8 INCH OAK
*2196	18 LONGLEAF PINE
2197	9 INCH OAK
2198	TWIN AMERICAN HOLLY 6 10
2199	17 INCH LONGLEAF PINE
2200	17 INCH PINE
2201	12 INCH PINE
2202	17 INCH LONGLEAF PINE
2203	16 INCH PINE
2204	9 INCH PINE
2205	17 LONGLEAF PINE
2206	16 INCH PINE
2207	14 INCH PINE
2208	13 INCH PINE
2209	15 INCH PINE
2210	9 INCH OAK
2213	LONGLEAF PINE
*2214	19 INCH LONGLEAF PINE

Point Table

Point #	Raw Description
2216	7 INCH OAK
*2217	19 INCH LONGLEAF PINE
2218	8 INCH OAK
2219	13 INCH LONGLEAF
2220	QUAD 12 LAUREL OAKS
2221	6 INCH OAK
2222	8 INCH OAK
2223	14 INCH PINE
2224	16 INCH PINE
2225	8 INCH OAK
2226	12 INCH LAUREL OAK
2227	6 INCH OAK
2228	10 INCH LONGLEAF PINE
*2229	19 INCH LONGLEAF PINE
2230	15 INCH PINE
2231	13 INCH PINE
2232	15 INCH PINE
2233	13 INCH PINE
2234	8 INCH OAK
2235	13 INCH PINE
2236	13 INCH PINE
2237	12 INCH PINE
2238	9 INCH OAK
2239	16 INCH PINE
2240	14 INCH PINE
2241	14 INCH PINE
2242	14 INCH PINE
2243	14 INCH PINE
2244	14 INCH PINE
*2245	20 INCH LONGLEAF PINE
2246	8 INCH OAK
2247	13 INCH PINE
2248	12 INCH LAUREL OAK
2249	17 INCH LONGLEAF PINE
2250	17 INCH PINE
2251	9 INCH OAK
2252	14 INCH PINE
2253	17 INCH PINE
2254	8 INCH OAK
2255	17 INCH PINE
2256	14 INCH PINE
2257	16 INCH PINE
2258	16 INCH PINE
*2259	18 INCH LONGLEAF PINE
2260	15 INCH PINE
2270	15 INCH PINE
2271	15 INCH PINE
2272	16 INCH PINE
2273	10 INCH PINE
2274	14 INCH PINE
2275	7 INCH MAGNOLIA
2276	9 INCH MAGNOLIA
2277	6 INCH MAGNOLIA
2278	16 INCH PINE
2280	14 INCH PINE
2281	14 INCH PINE
2282	17 INCH SLASH PINE
2283	16 INCH PINE
2284	16 INCH PINE
2285	18 INCH SLASH PINE
2286	TWIN 7 INCH 7 INCH OAK
2287	22 INCH SLASH PINE
2288	15 INCH LONGLEAF PINE
2289	12 INCH PINE
2290	TWIN 6 INCH 6 INCH OAK
2291	14 INCH LONGLEAF PINE
2292	15 INCH PINE
2293	15 INCH PINE
2294	10 INCH AMERICAN HOLLY
2295	10 INCH AMERICAN HOLLY
2296	15 INCH PINE
2297	14 LONGLEAF PINE
2298	12 INCH LAUREL OAK
2299	14 INCH PINE
2300	12 INCH LAUREL OAK
2301	17 INCH PINE
2302	16 INCH LONGLEAF PINE
2303	12 INCH LONGLEAF OAK
2304	14 INCH PINE
2305	8 INCH OAK
2306	17 INCH LONGLEAF PINE
2307	15 INCH PINE
2308	17 INCH PINE
2309	13 INCH PINE
2310	15 INCH PINE

Point Table

Point #	Raw Description
2311	16 INCH PINE
2312	17 INCH PINE
2313	LAUREL OAK
2314	10 INCH DAHOON
2315	LAUREL OAK
2316	15 INCH PINE
2317	12 INCH LAUREL OAK
2318	10 INCH LAUREL OAK
2319	19 INCH SLASH PINE
2320	LAUREL OAK
2321	17 INCH SLASH PINE
2322	15 INCH LONGLEAF PINE
2323	14 INCH PINE
2324	11 INCH LAUREL OAK
2325	6 INCH OAK
2326	9 INCH OAK
2327	LAUREL OAK
2328	6 INCH OAK
2331	12 CHINESE TALLOW
2333	12 CHINESE TALLOW
2336	10 CHINESE TALLOW
2337	6 INCH PINE
2338	8 INCH PINE
2340	12 CHINESE TALLOW
2341	10 CHINESE TALLOW
2342	TWIN 7 10 CHINESE TALLOW
2345	16 INCH PINE
2346	8 INCH PINE
2347	14 INCH PINE
2348	11 INCH PINE
2349	8 IN

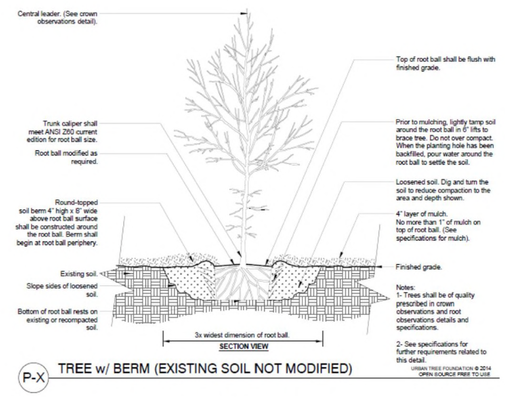

P-X TREE w/ BERM (EXISTING SOIL NOT MODIFIED)

Date: December 11, 2015 | TREE PLANTING WITH BERM -- EXISTING SOIL NOT MODIFIED | P110

City of DeLand Standard Details

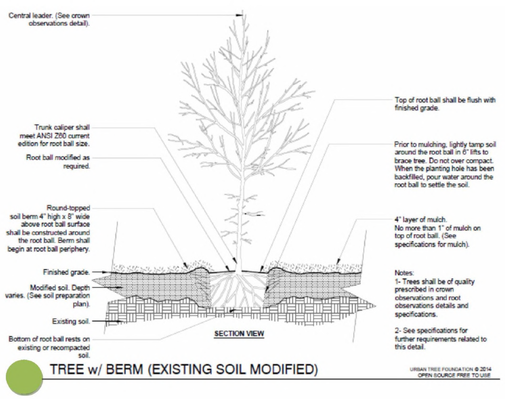

TREE w/ BERM (EXISTING SOIL MODIFIED)

Date: December 11, 2015 | TREE PLANTING WITH BERM -- EXISTING SOIL MODIFIED | P115

City of DeLand Standard Details

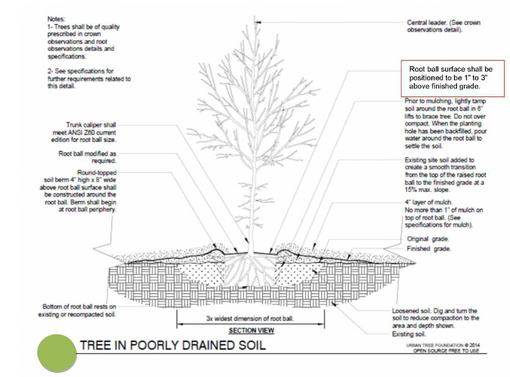

TREE IN POORLY DRAINED SOIL

Date: December 11, 2015 | TREE IN POORLY DRAINED SOIL | P100

City of DeLand Standard Details

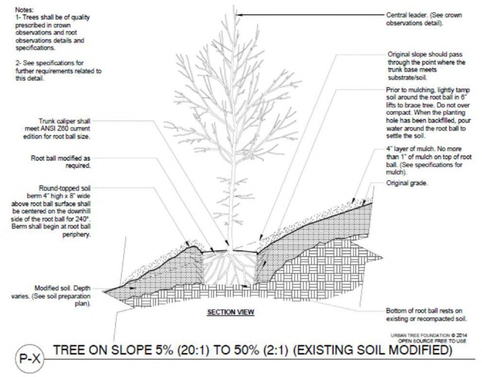

P-X TREE ON SLOPE 5% (20:1) TO 50% (2:1) (EXISTING SOIL MODIFIED)

Date: December 11, 2015 | TREE ON SLOPE -- EXISTING SOIL MODIFIED | P125

City of DeLand Standard Details

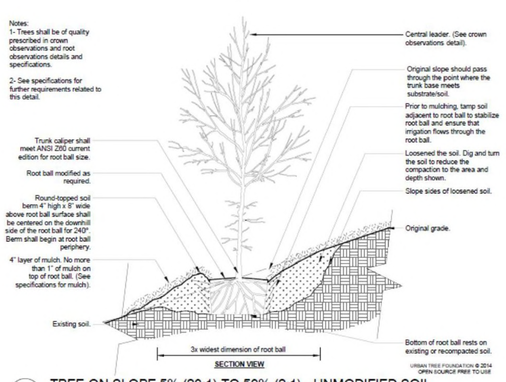

P-X TREE ON SLOPE 5% (20:1) TO 50% (2:1) - UNMODIFIED SOIL

Date: December 11, 2015 | TREE ON SLOPE – UNMODIFIED SOIL | P120

City of DeLand Standard Details

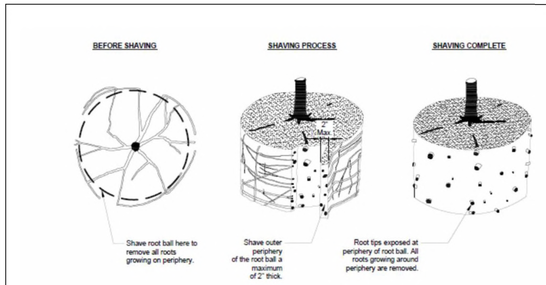

ROOT BALL SHAVING CONTAINER DETAIL

Date: December 11, 2015 | ROOT BALL SHAVING CONTAINER DETAIL | P140

City of DeLand Standard Details

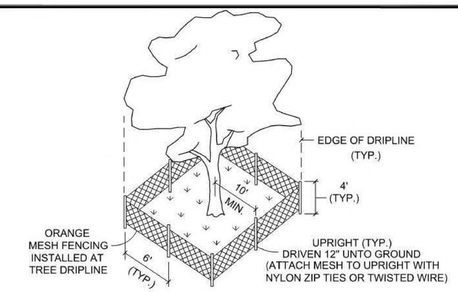

TYP. CITY TREE BARRICADE DETAIL

N.T.S.

TREE BARRICADES ARE REQUIRED AROUND ALL TREES WHICH HAVE BEEN DESIGNATED ON THE SITE PLAN TO BE RETAINED AND PROTECTED. PRIOR TO ANY CLEARING OR CONSTRUCTION ACTIVITY OCCURRING ON THE SITE, TREE BARRICADES SHALL BE CONSTRUCTED BY THE CONTRACTOR AND APPROVED BY THE CITY. TREE BARRICADES SHALL BE PLACED AT THE EDGE OF THE DRIPLINE OR A MINIMUM OF 10' FROM THE TRUNK OF THE TREE, WHICH EVER IS GREATER.

FOR THE BARRIER THE CITY RECOMMENDS SAFETY BARRICADE FENCING.

NOTE: EXISTING TREES IN LANDSCAPE BUFFER SHALL ALSO BE PROTECTED.

DATE: JANUARY 31, 2023 | **TREE BARRICADE DETAIL** | **M112**

City of DeLand - Standard Details

MINIMUM TREE PLANTING SIZE PER CITY OF DELAND MUNICODE SEC.33-57.05(b)2

Revisions:			
Date:	By:		
3/27/23	BIL	REVISED PER CIT OF DELAND COMMENTS	

Designer: MWR | Scale: N.I.S.
Drawn: BIL | Project: 2022-04
Checked: MWR | Date: 10-14-2022
Title: Meadowlea Village Ph. 4-7.dwc

MICHAEL W. RADCLIFFE ENGINEERING, INC.
3801 S.E. Lake Weir Avenue Ocala, FL 34471 (352) 629-5300 FAX (352) 629-1010
Certificate No. EB 0006198 • Michael W. Radcliffe P.E. #31170 • Christopher A. Geib P.E. #66568
www.radcliffeengineering.com

COPYRIGHT © 2023 Michael W. Radcliffe Engineering, Inc. All Rights Reserved

Project Name: Meadowlea Village Ph. 4&5
Sheet Name: Landscape Details

Sheet No. C010 of C021

X:\MWRE Projects\Meadowlea MHP\2022-04 Meadowlea Village Ph. 4-7\Design\CADD\Meadowlea Village Ph. 4-7.dwg 3/28/2023 1:07 PM

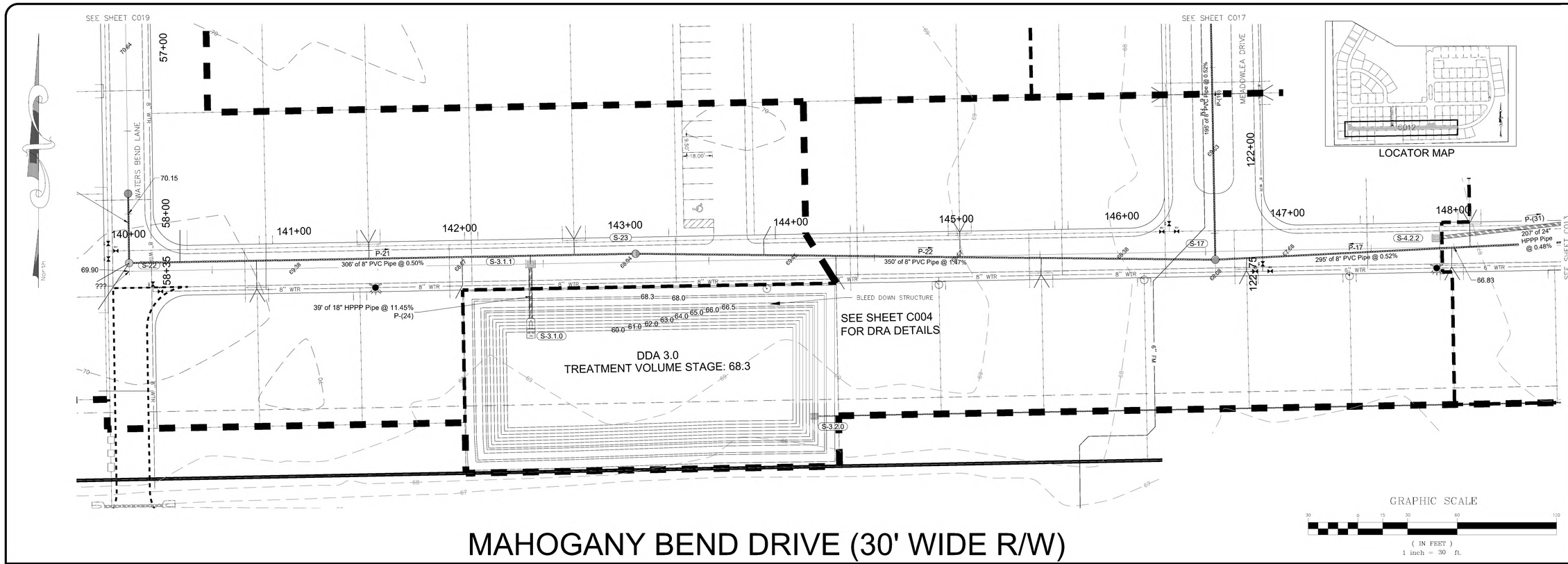

MAHOGANY BEND DRIVE (30' WIDE R/W)

HORIZONTAL: 1" = 30'
VERTICAL: 1" = 3'

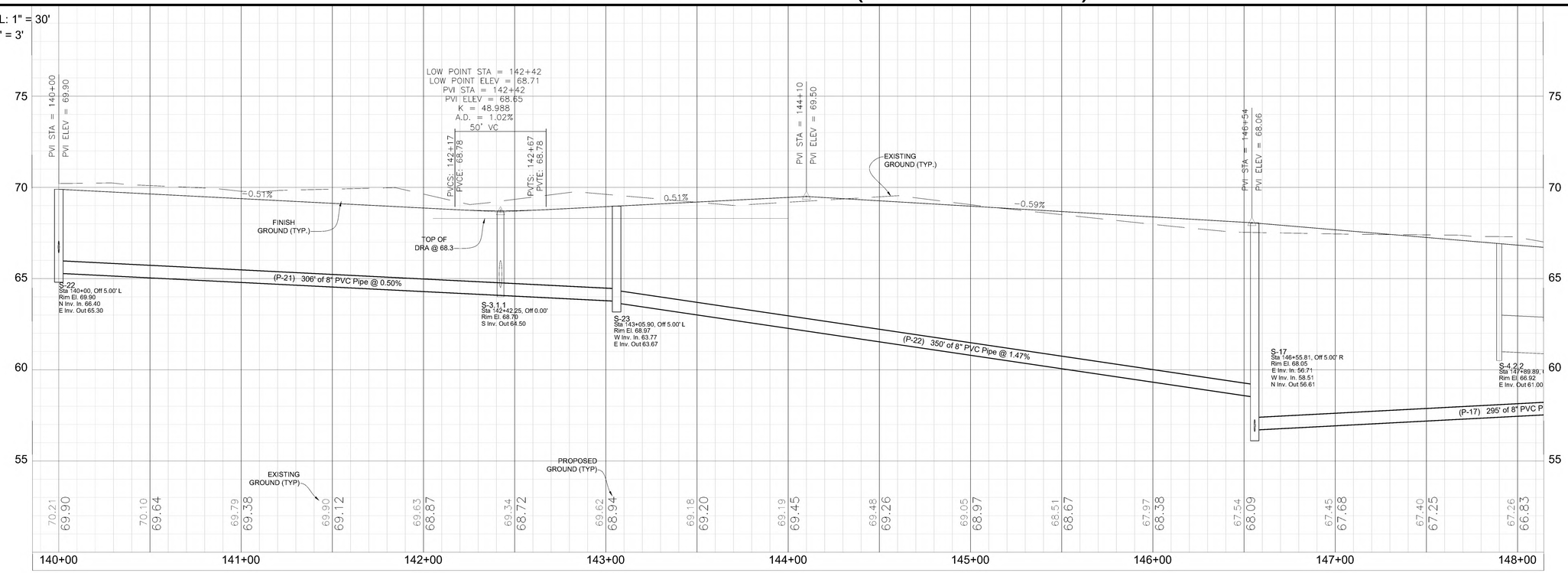

Revisions:		
Date:	By:	
3/27/23	BIL	REVISED PER OT OF DELAND COMMENTS.

Designed: MWR	Scale: 1" = 30'		
Drawn: BIL	Project: 2022-04		
Checked: MWR	Date: 10-14-2022		
File: Meadowlea Village Ph. 4-7.dwg			

MICHAEL W. RADCLIFFE ENGINEERING, INC.
Civil Site Land Development
2011 S.E. Lake Weir Avenue Ocala, FL 34471 (352) 629-5300 FAX (352) 629-5301
Certificate No. Engineering 27-00006166 Certificate No. Surveying LB-7911
Michael W. Radcliffe P.E. #51776 Christopher A. Lewis P.E. #58646
www.radcliffeengineering.com

Copyright © 2023 Michael W. Radcliffe Engineering, Inc. All Rights Reserved

Project Name: Meadowlea Village Ph. 4&5
Sheet Name:

Plan / Profile
Mahogany Bend Drive

Sheet No.
C012
of
C021

X:\MWRE Projects\Meadowlea MHP\2022-04 Meadowlea Village Ph. 4-7\Design\CADD\Meadowlea Village Ph. 4-7.dwg 3/28/2023 1:12 PM

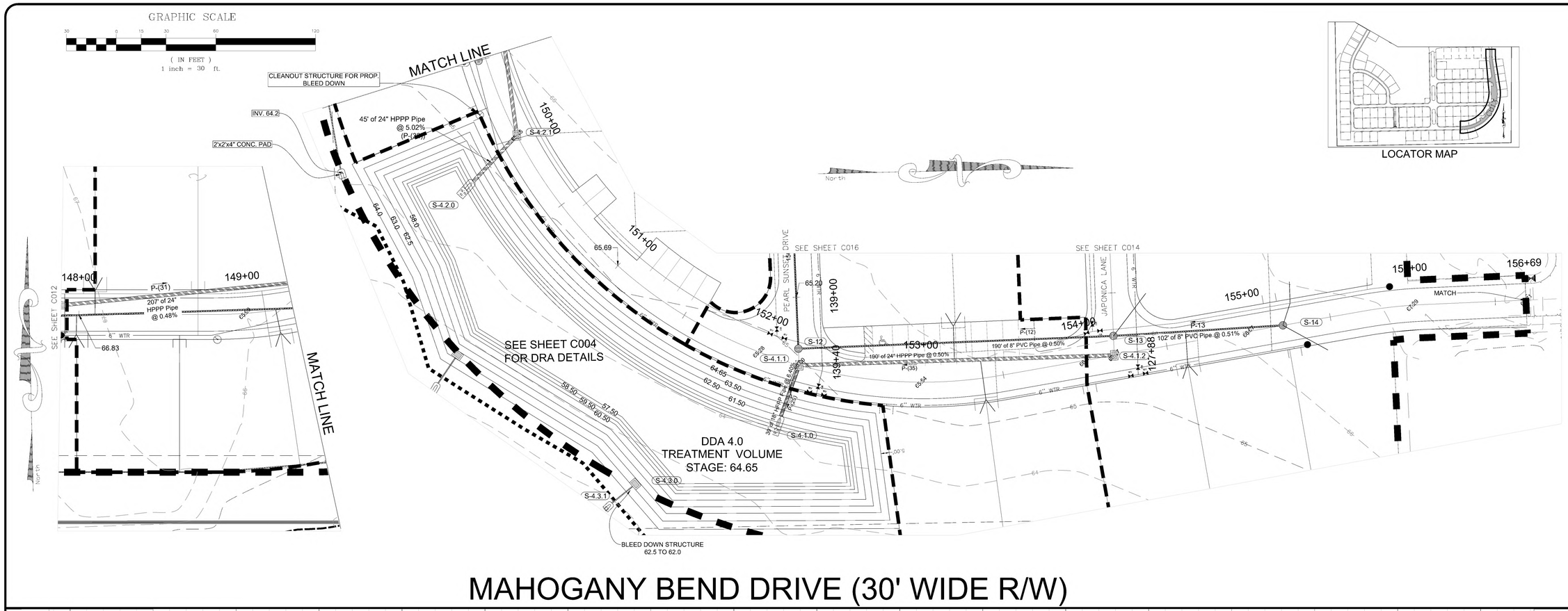

MAHOGANY BEND DRIVE (30' WIDE R/W)

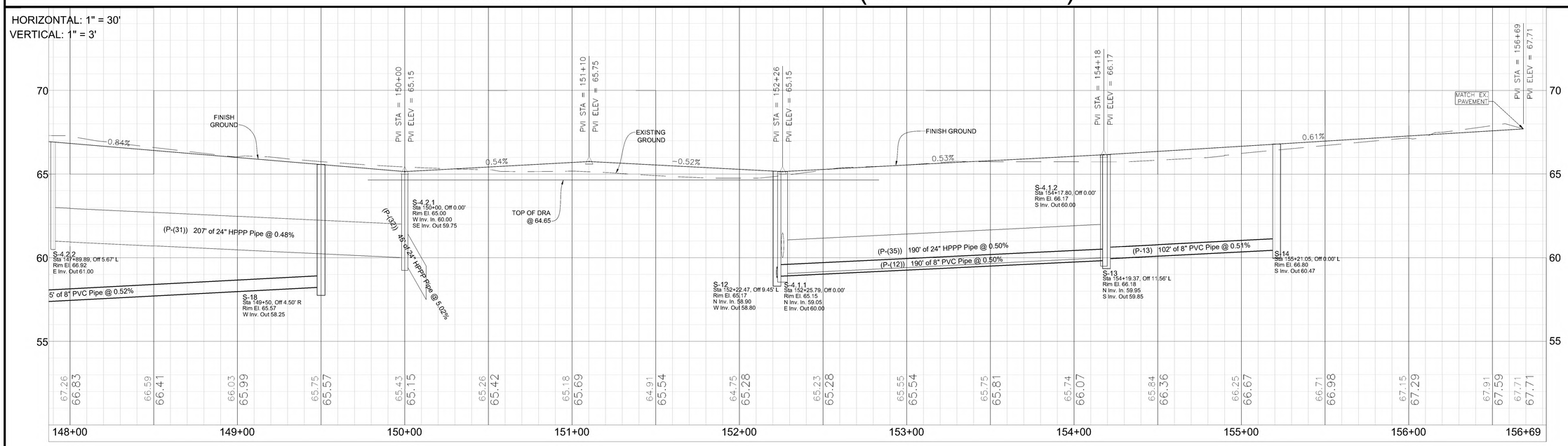

Revisions		
Date:	By:	
3/27/23	BIL	REVISED PER OT OF DELAND COMMENTS.

Designed: MWR
Drawn: BIL
Checked: MWR
Scale: 1" = 30'
Project: 2022-04
Date: 10-14-2022
File: Meadowbrooke Village Ph. 4-7.dwg

MICHAEL W. RADCLIFFE ENGINEERING, INC.
2811 S.E. Lake Weir Avenue Ocala, FL 34471 (352) 629-5500 FAX (352) 629-1010
Certificate No. EB-0006198 • Michael W. Radcliffe P.E. #31170 Christopher A. Lewis P.E. #66568

Project Name:
Sheet Name:
Plan / Profile
Mahogany Bend Drive

Sheet No.
C013
of

GRAPHIC SCALE

(IN FEET)
1 inch = 30 ft.

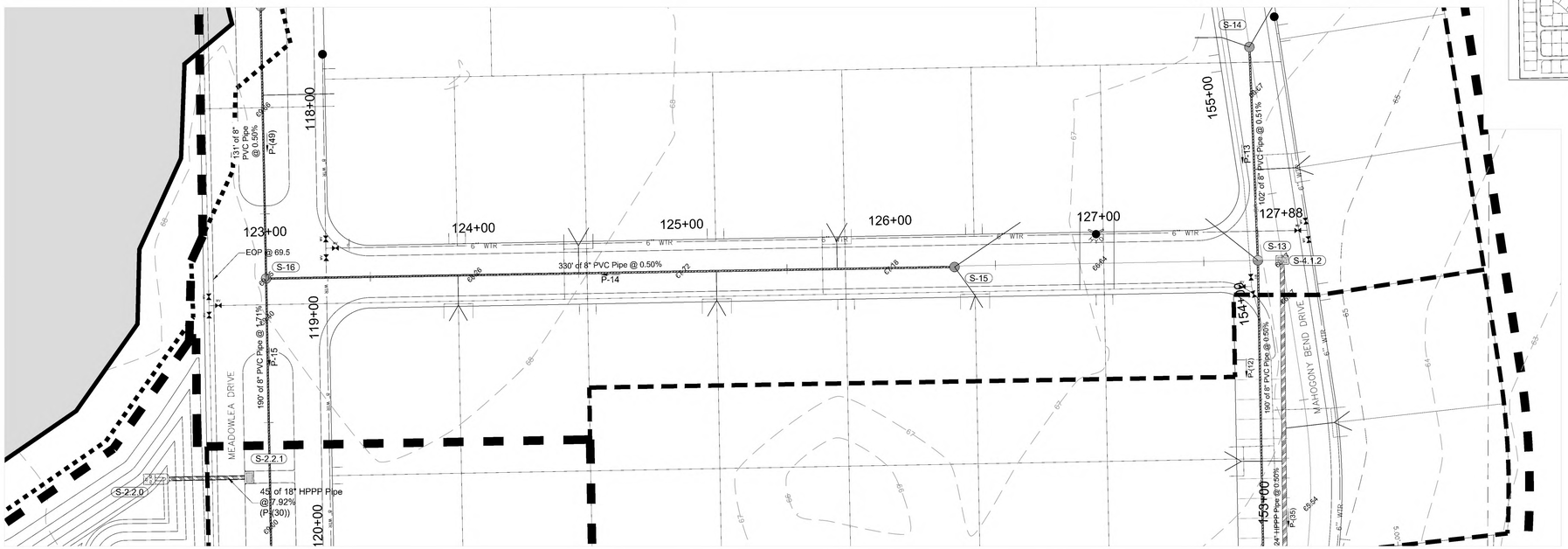

LOCATOR MAP

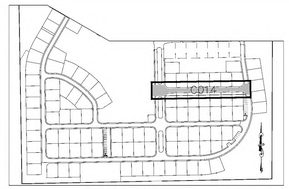

JAPONICA LN (30' WIDE R/W)

HORIZONTAL: 1" = 30'
VERTICAL: 1" = 3'

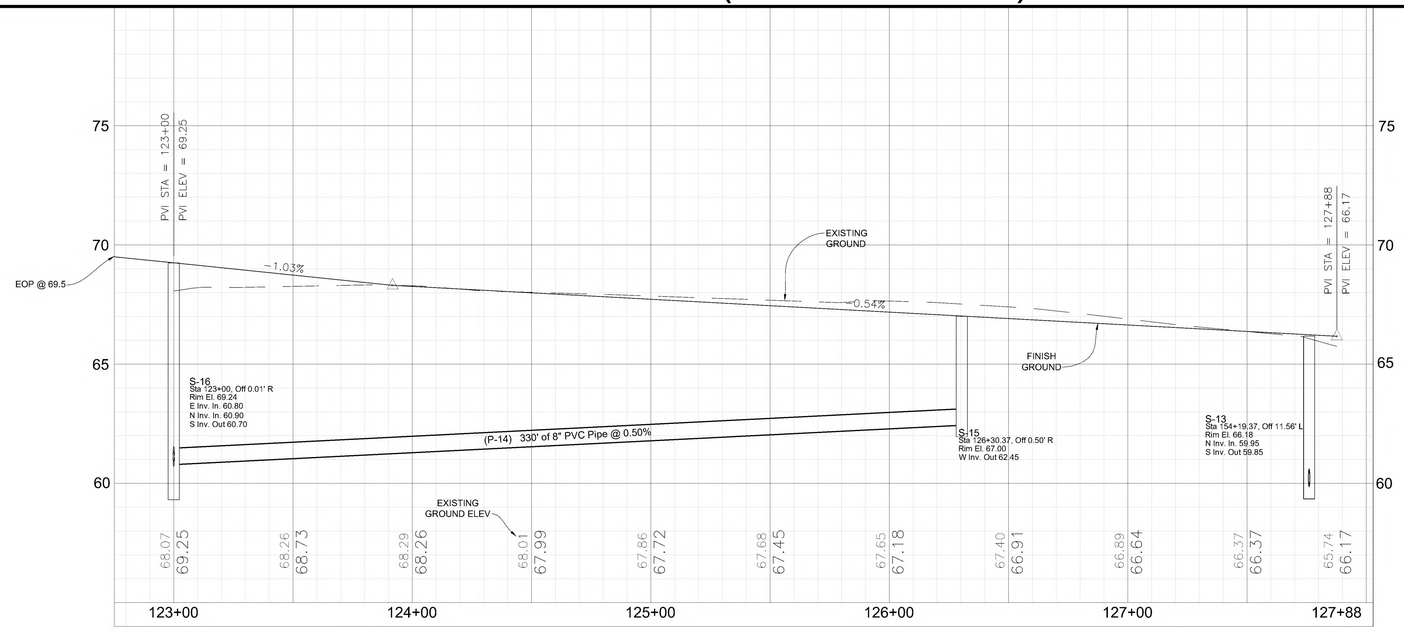

Date:	By:	Revisions:
3/27/23	BIL	REVISED PER OIT OF DELAND COMMENTS.

Designed: MWR
Drawn: BIL
Checked: MWR
Scale: 1" = 30'
Project: 2022-04
Date: 10-14-2022
File: Meadowlea Village Ph. 4-7.dwg

MICHAEL W. RADCLIFFE ENGINEERING, INC.
3611 S.E. Lake Weir Avenue • Ocala, FL 34471 • (352) 629-3560 • FAX (352) 629-9015
Certificate No. Eb-0005198 • Michael W. Radcliffe P.E. (#11170) • Christopher A. Cahill P.E. (#65568
www.radcliffeengineering.com

Copyright © 2023 Michael W. Radcliffe Engineering, Inc. All Rights Reserved

Project Name: Meadowlea Village Ph. 4&5
Sheet Name: Plan / Profile Japonica Ln

Sheet No.
C014
of
C021

X:\MWRE Projects\Meadowlea MHP\2022-04 Meadowlea Village Ph. 4-7\Design\CADD\Meadowlea Village Ph. 4-7.dwg 3/28/2023 1:15 PM

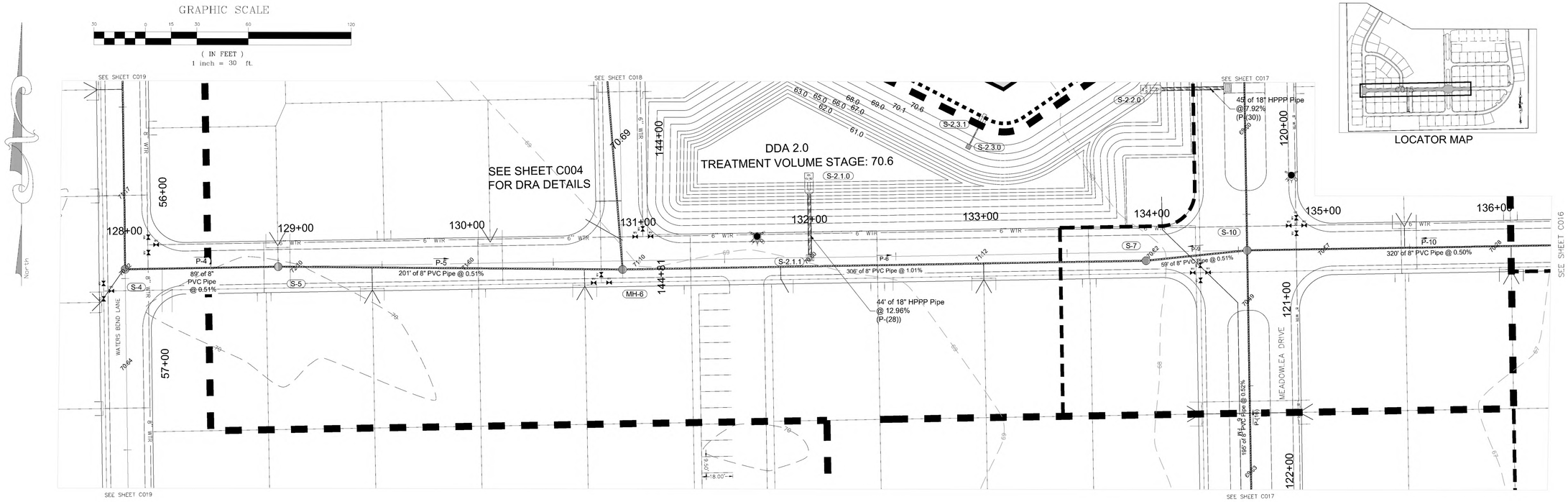

PEARL SUNSET DRIVE (30' WIDE R/W)

HORIZONTAL: 1" = 30'
VERTICAL: 1" = 3'

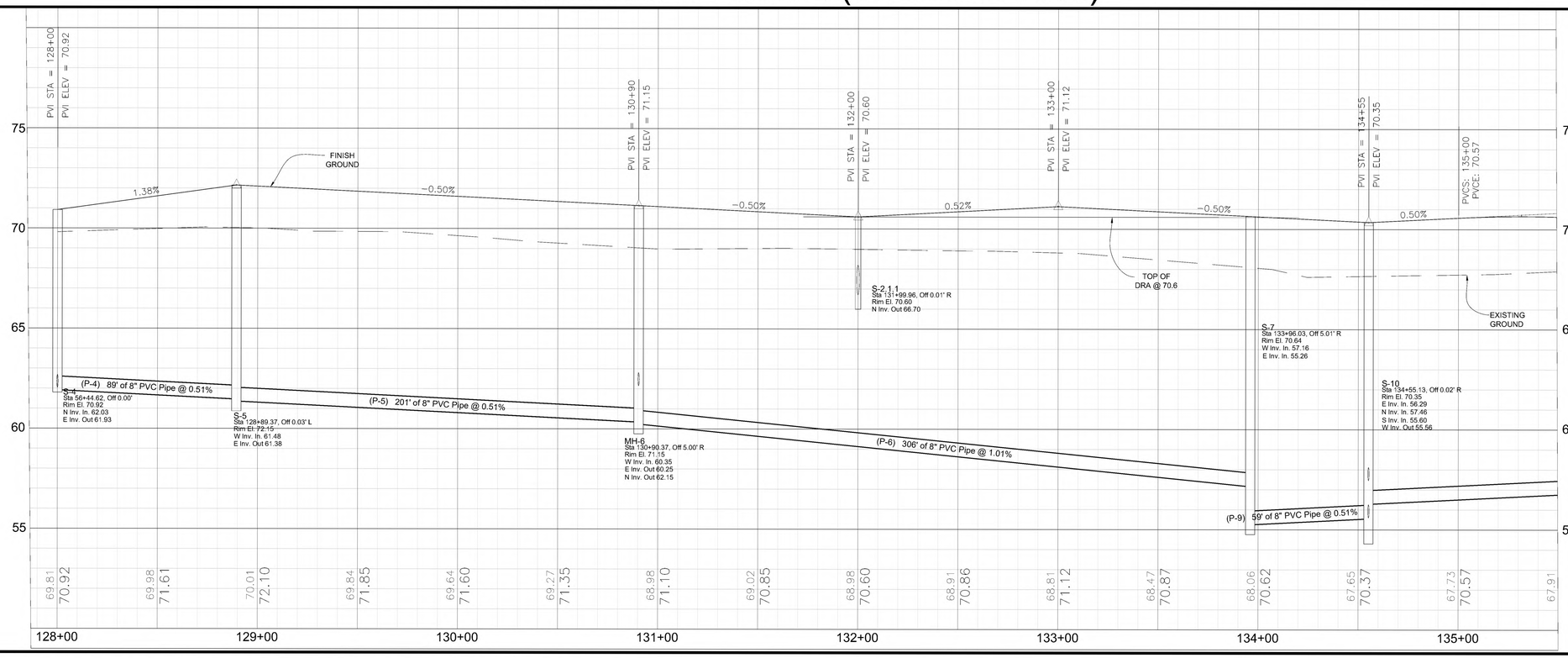

Date:	By:	Revisions:
3/27/23	BIL	REVISED PER OT OF DELAND COMMENTS

Assigned: MWR
Drawn: BIL
Checked: MWR
Scale: 1" = 30'
Project: 2022-04
Date: 10-14-2022
File: Meadowlea Village Ph. 4-7.dwg

MICHAEL W. RADCLIFFE ENGINEERING, INC.
1861 S.E. Lake Weir Avenue - Ocala, FL 34471 - (352) 629-5500 - FAX (352) 629-1015
Certificate No. EB-0005198 - Michael W. Radcliffe P.E. #35170 - Christopher A. Gwin P.E. #66568
www.radcliffeengineering.com

MWR Engineering, Inc. All Rights Reserved

Project Name: Meadowlea Village Ph. 4&5
Sheet Name: Plan / Profile Pearl Sunset Drive

Sheet No.
C015
of
C021

X:\MWRE Projects\Meadowlea MHP\2022-04 Meadowlea Village Ph. 4-7\Design\CADD\Meadowlea Village Ph. 4-7.dwg 3/28/2023 3:23 PM

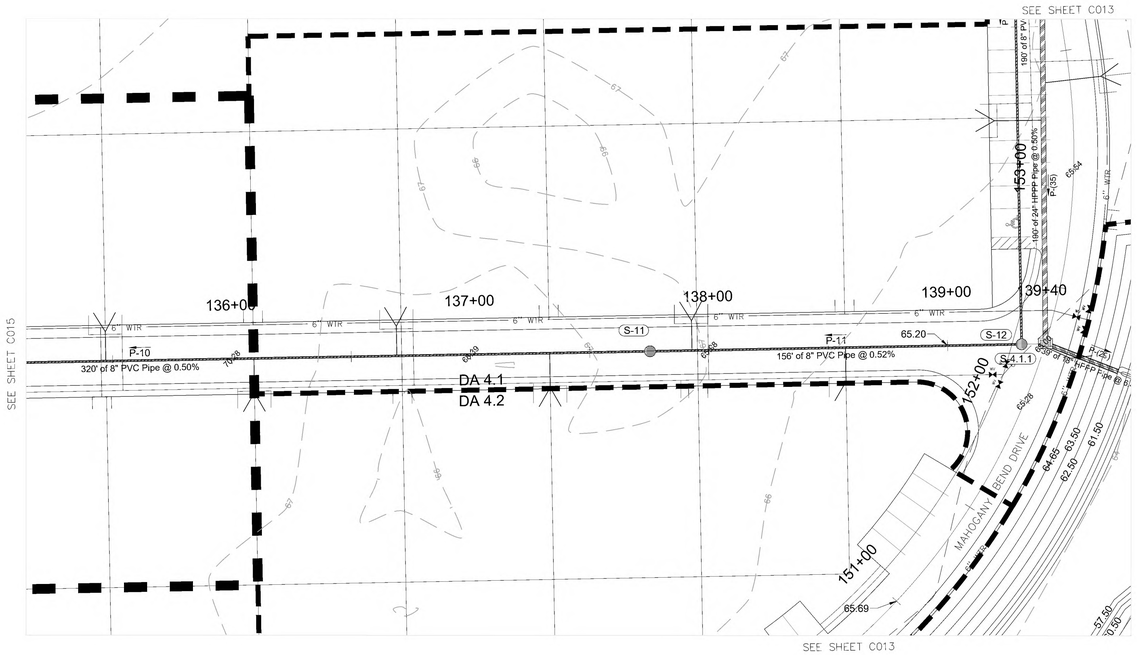

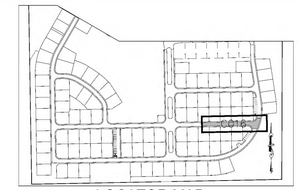

LOCATOR MAP

GRAPHIC SCALE

(IN FEET)
1 inch = 30 ft.

PEARL SUNSET DRIVE (30' WIDE R/W)

HORIZONTAL: 1" = 30'
VERTICAL: 1" = 3'

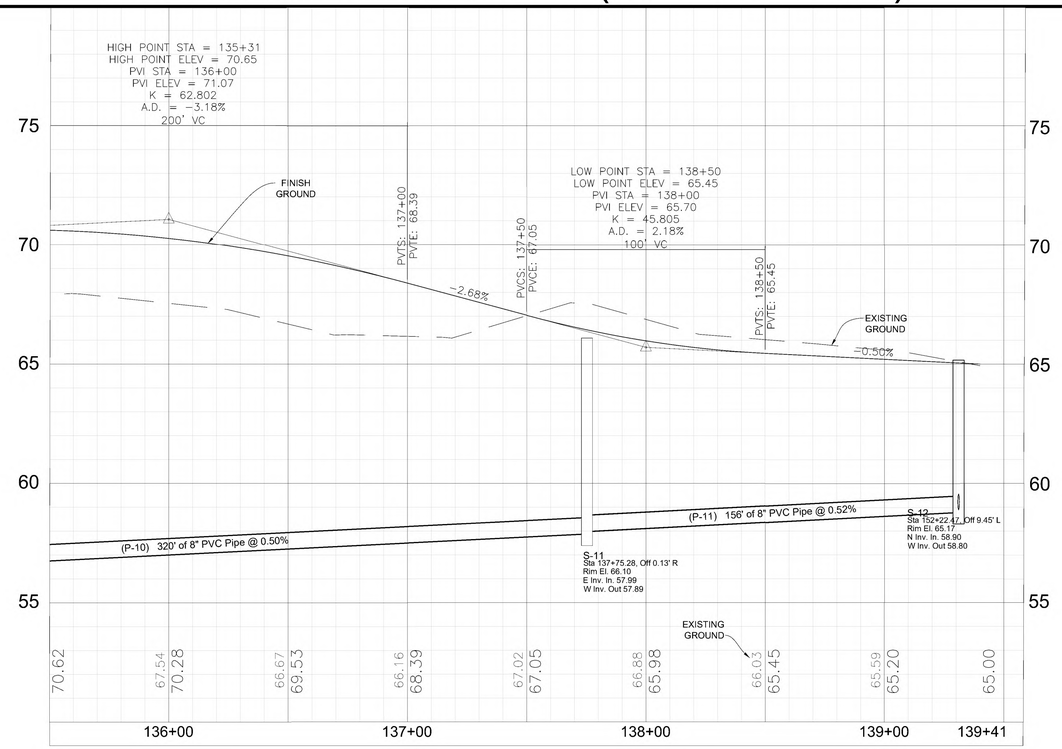

Revisions:		
Date:	By:	
3/27/23	BIL	REVISED PER OT OF DELAND COMMENTS.

Designed: MWR
Drawn: BIL
Checked: MWR
Scale: 1" = 30'
Project: 2022-04
Date: 10-14-2022
File: Meadowlea Village Ph. 4-7.dwg

MICHAEL W. RADCLIFFE ENGINEERING, INC.
2811 S.E. Lake Weir Avenue • Ocala, FL 34471 • (352) 624-5500 • FAX (352) 624-0101
Certificate No. EB-0006198 • Michael W. Radcliffe P.E. #31170 • Christopher A. Cash P.E. #65588
www.radcliffeengineering.com

COPYRIGHT © 2023 Michael W. Radcliffe Engineering, Inc. All Rights Reserved

Project Name: Meadowlea Village Ph. 4&5
Sheet Name: Plan / Profile Pearl Sunset Drive

Sheet No.
C016
of
C021

X:\MWRE Projects\Meadowlea MHP\2022-04 Meadowlea Village Ph. 4-7\Design\CADD\Meadowlea Village Ph. 4-7.dwg 3/28/2023 1:18 PM

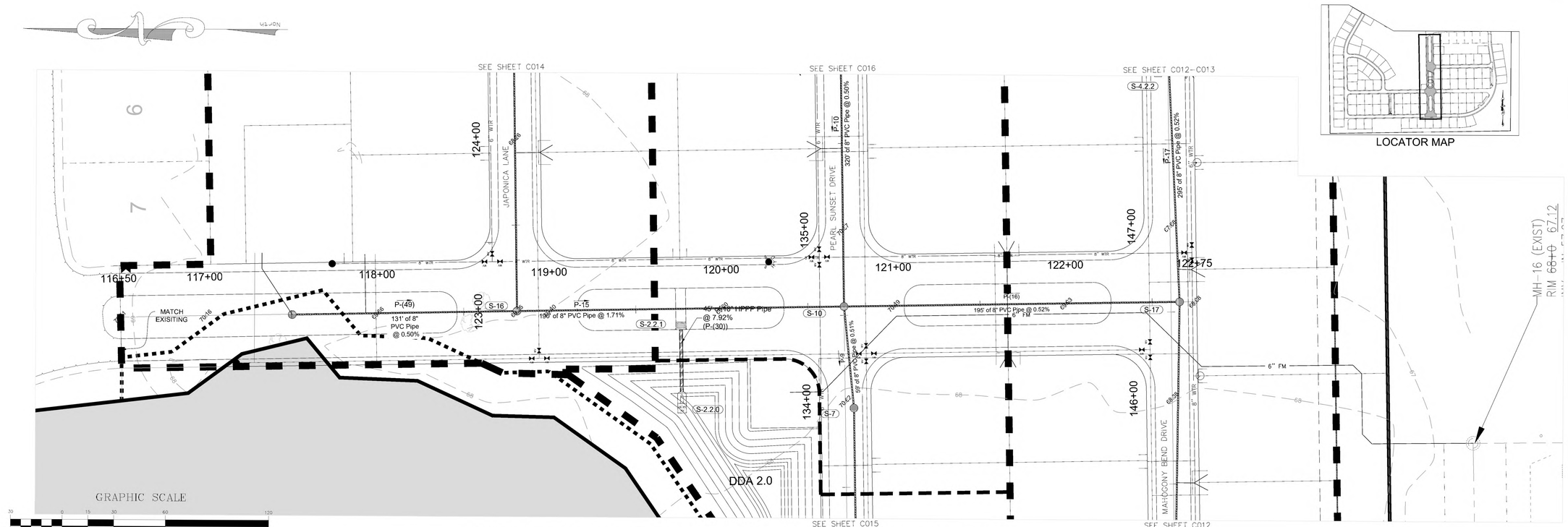

LOCATOR MAP

MEADOWLEA DRIVE (60' WIDE R/W)

HORIZONTAL: 1" = 30'
VERTICAL: 1" = 3'

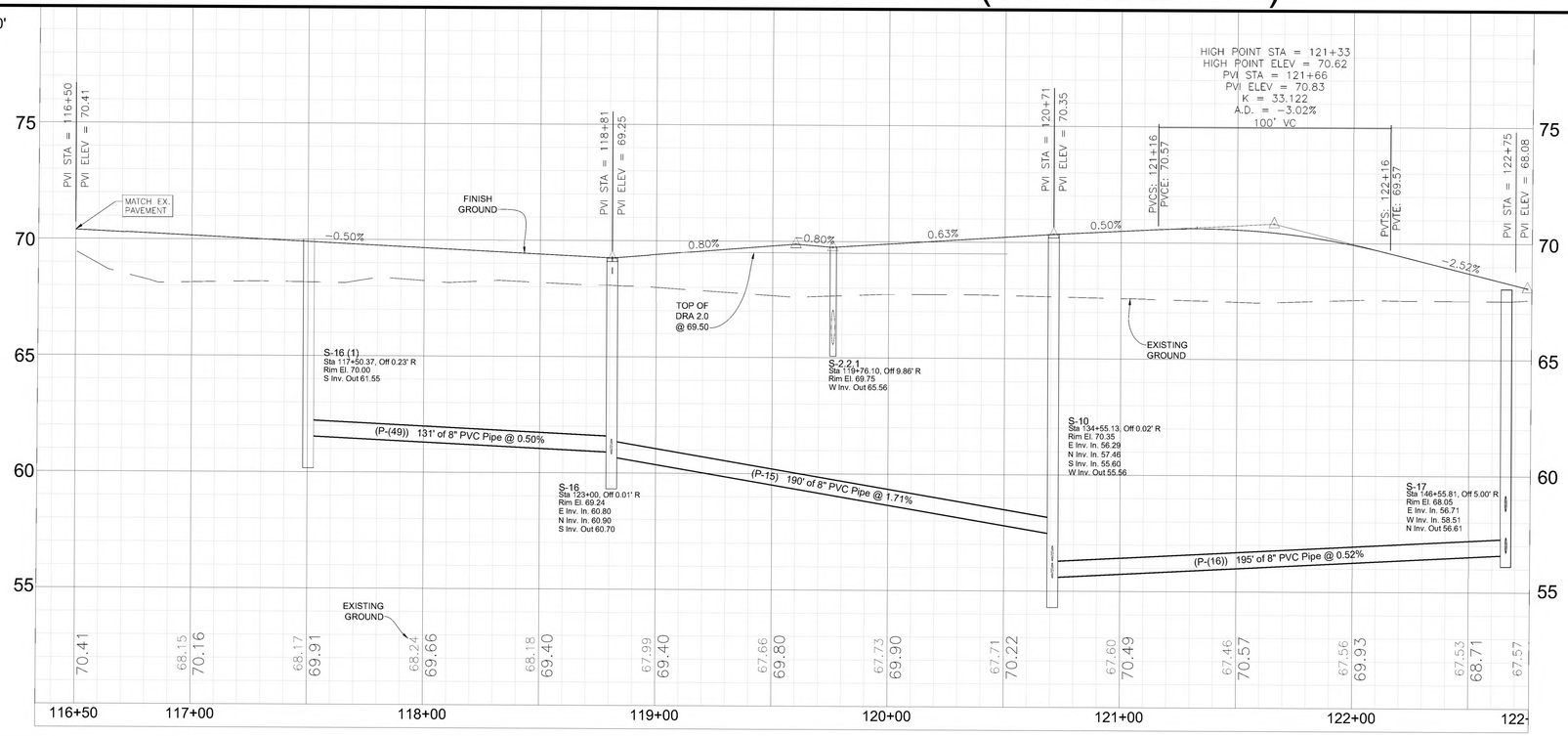

Revisions:		
Date:	By:	
3/27/23	BIL	REVISED PER CIT OF DELAND COMMENTS.

Designed: MWR
Drawn: BIL
Checked: MWR
File: Meadowlea Village Ph. 4-7.dwg

Scale: 1" = 30'
Project: 2022-04
Date: 10-14-2022

MICHAEL W. RADCLIFFE ENGINEERING, INC.
2611 S.E. Lake Weir Avenue Ocala, FL 34471 (352) 629-5500 FAX (352) 629-0170
Certificate No. EB-0006198 - Michael W. Radcliffe P.E. #31170 Christopher A. Gwin P.E. #95568
www.radcliffeengineering.com

COPYRIGHT © 2023 Michael W. Radcliffe Engineering, Inc. All Rights Reserved

Project Name: Meadowlea Village Ph. 4&5
Sheet Name:
Plan / Profile
Meadowlea Drive

Sheet No.
C017
of
C021

X:\MWE Projects\Meadowlea MHP\2022-04 Meadowlea Village Ph. 4-7\Design\CADD\Meadowlea Village Ph. 4-7.dwg 3/29/2023 1:19 PM

GRAPHIC SCALE

30 0 15 30 60 120

(IN FEET)
1 inch = 30 ft.

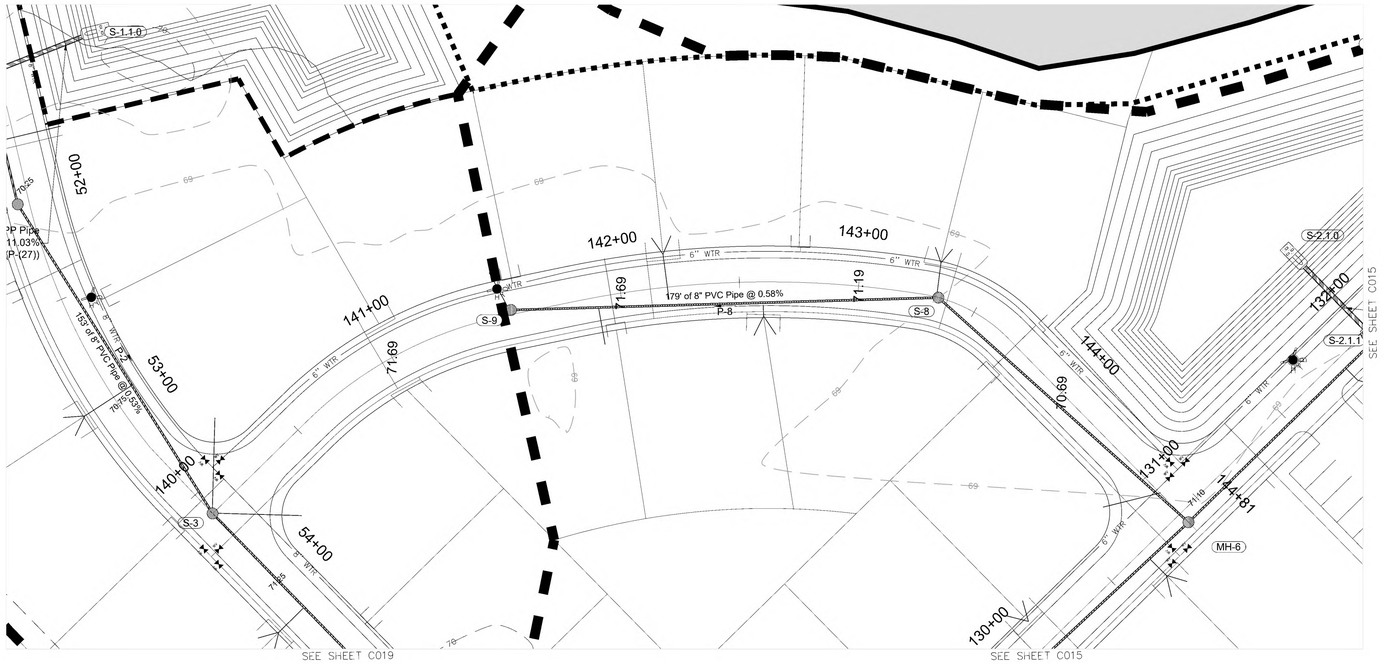

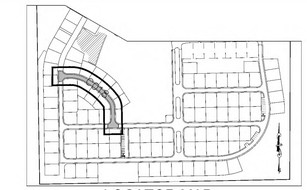

LOCATOR MAP

PALM WARBLER PATH (30' WIDE R/W)

HORIZONTAL: 1" = 30'
VERTICAL: 1" = 3'

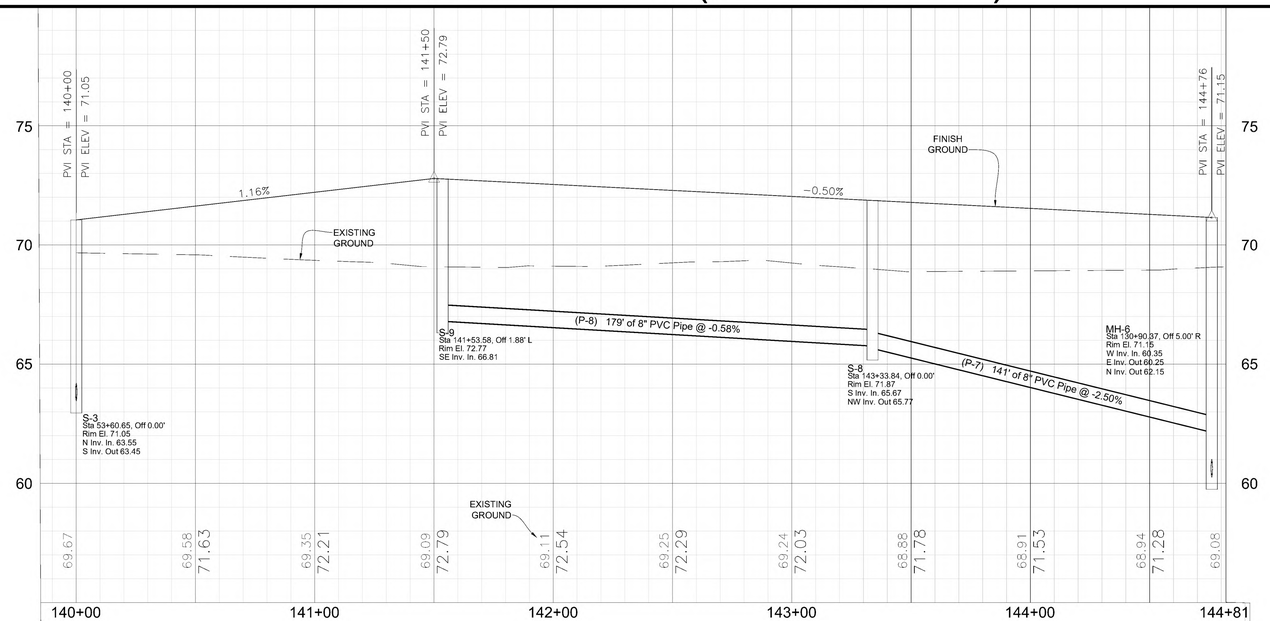

Date:	By:	Revisions:
3/27/23	BIL	REVISED PER CIT OF DELAND COMMENTS.

Designed: MWR
Drawn: BIL
Checked: MWR
Scale: 1" = 50'
Project: 2022-04
Date: 10-14-2022
File: Meadowlea Village Ph. 4-7.dwg

MICHAEL W. RADCLIFFE ENGINEERING, INC.
1811 S.E. Lake Weir Avenue Ocala, FL 34471 (352) 629-3500 FAX (352) 629-8015
Certificate No. Eb-0005198 - Michael W. Radcliffe P.E. #31170 Christopher A. Cahill P.E. #65588
www.radcliffeengineering.com

Copyright © 2023 Michael W. Radcliffe Engineering, Inc. All Rights Reserved

Project Name: Meadowlea Village Ph. 4&5
Sheet Name: Plan / Profile Palm Warbler Path

Sheet No.
C018
of
C021

X:\MWRE Projects\Meadowlea MHP\2022-04 Meadowlea Village Ph. 4-7\Design\CADD\Meadowlea Village Ph. 4-7.dwg 3/28/2023 3:22 PM

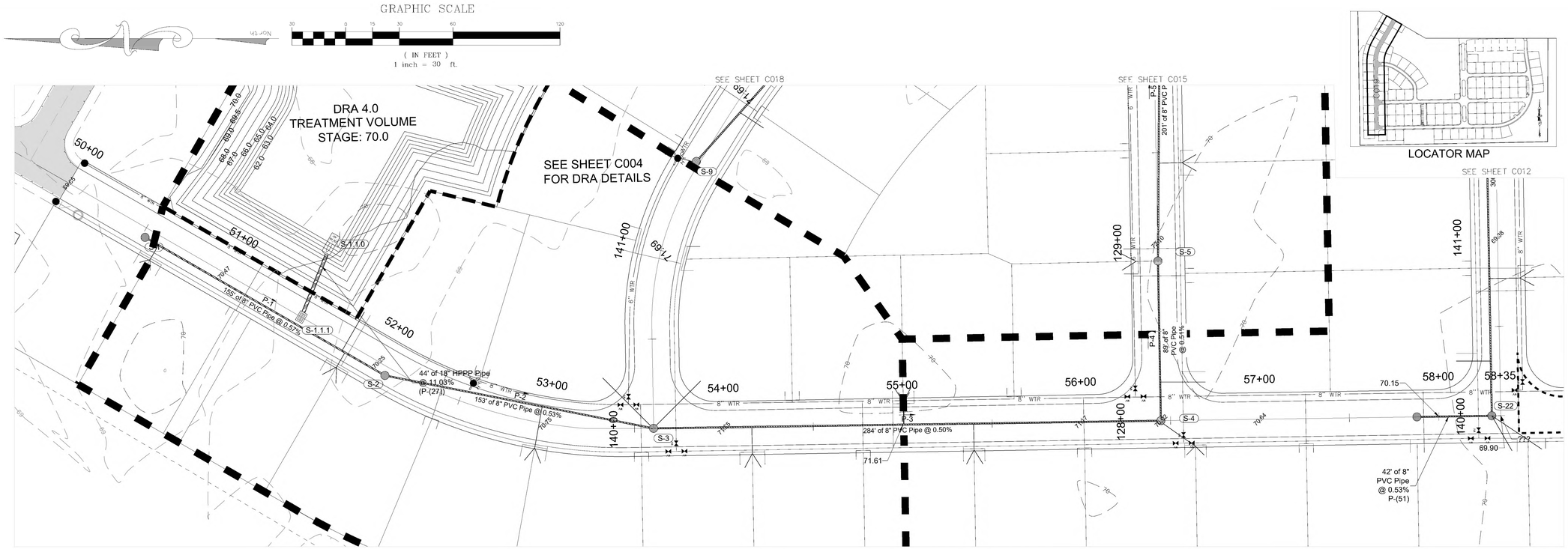

WATERS BEND LANE (30' WIDE R/W)

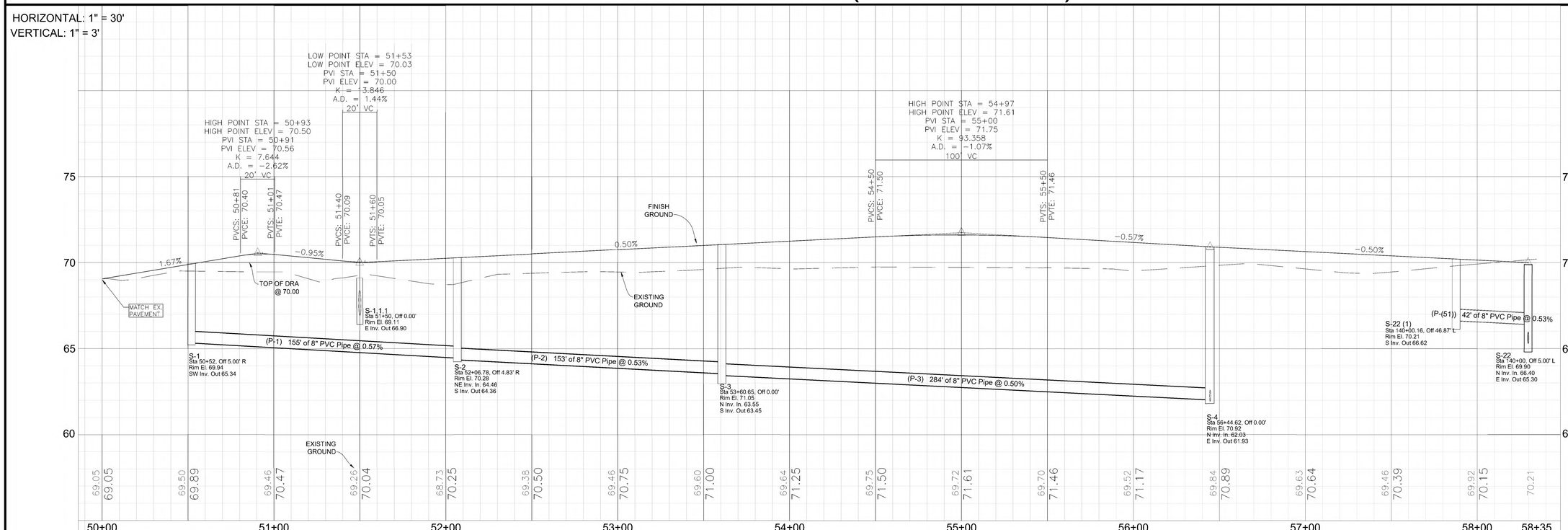

MICHAEL W. RADCLIFFE ENGINEERING, INC.
7811 S.E. Lake Weir Avenue, Ocala, FL 34471 (352) 624-5500 - FAX (352) 624-0115
Certificate No. EB-0006198 - Michael W. Radcliffe P.E. #31170 - Christopher A. Cahill P.E. #65568
www.radcliffeengineering.com

Revisions:			
Date:	By:		
3/27/23	BIL	REVISED PER CIT OF DELAND COMMENTS.	

Designed: MWR
Drawn: BIL
Checked: MWR
Scale: 1" = 30'
Project: 2022-04
Date: 10-14-2022
File: Meadowlea Village Ph. 4-7.dwg

Project Name: Meadowlea Village Ph. 4&5
Sheet Name: Plan / Profile Waters Bend Lane

Sheet No.
C019
of
C021

Copyright © 2023 Revised & Restricted Rights Reserved

X:\MWRE Projects\Meadowlea MHP\2022-04 Meadowlea Village Ph. 4-7\Design\CADD\Meadowlea Village Ph. 4-7.dwg 3/28/2023 3:26 PM

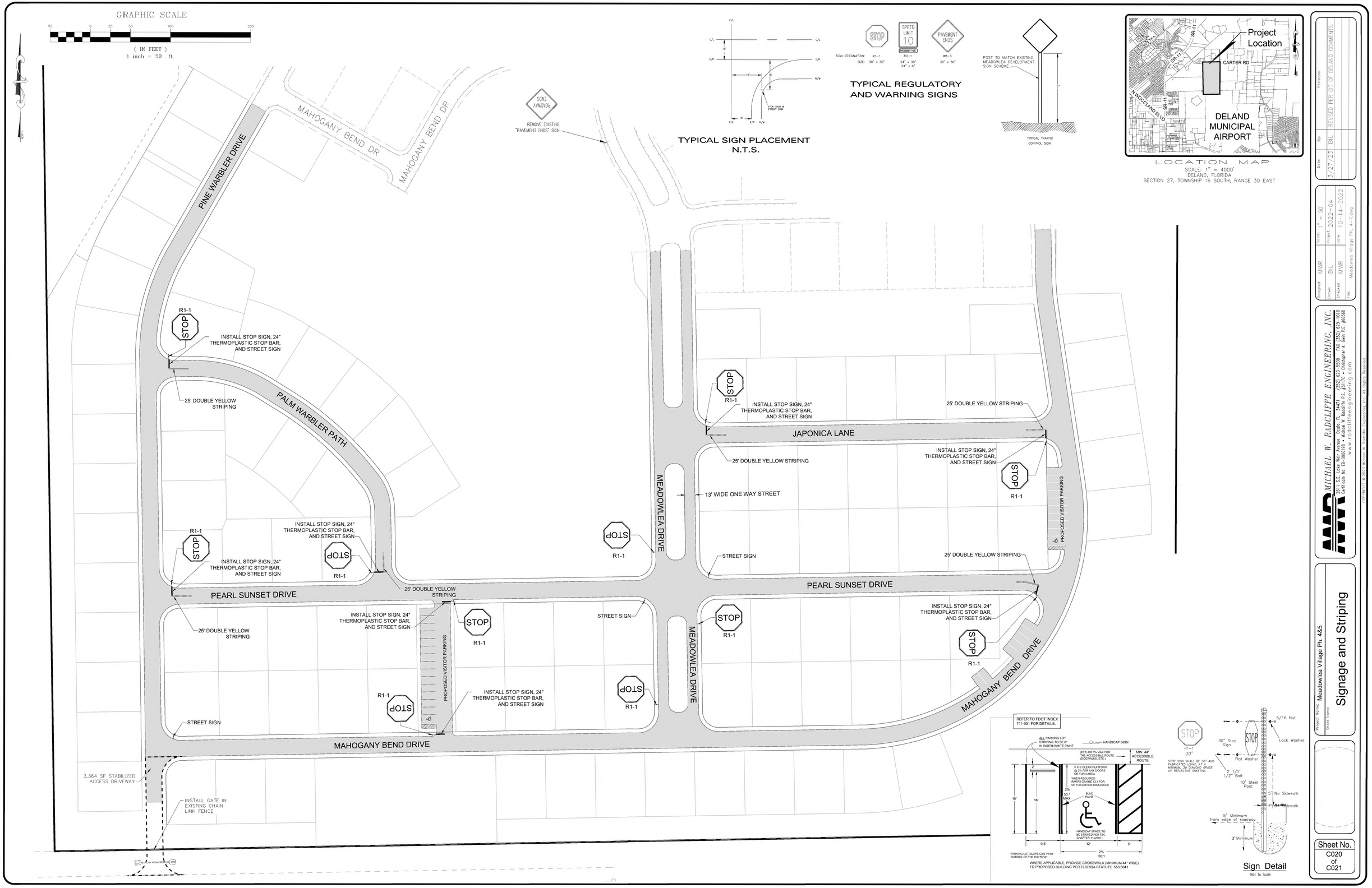

Copyright © 2023 Michael W. Radcliffe Engineering, Inc. All Rights Reserved

Meadowlea Village
A COVE COMMUNITY

MEADOWLEA MHP - PH. 4-7 SITE PLAN
CITY OF DELAND, FLORIDA

GRAPHIC SCALE
60 0 30 60 120 240
(IN FEET)
1 inch = 60 ft.

LEGEND:

PROP D.D.A. 2.0	DRAINAGE RETENTION AREA
	SILT FENCE LOCATION
	INLET PROTECTION

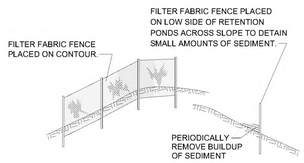

1. FILTER FABRIC FENCE SHALL BE EMBEDDED IN THE SOIL A MIN. OF 4".
2. INSPECTION SHALL BE FREQUENT AND REPAIR OR REPLACEMENT SHALL BE MADE PROMPTLY AS NEEDED.
3. FILTER FABRIC FENCE SHALL BE REMOVED WHEN IT HAS SERVED ITS USEFULNESS SO AS NOT TO BLOCK OR IMPEDE STORM FLOW OR DRAINAGE.

SILT FENCE DETAIL
Not to Scale

SILT FENCE PROTECTION
IN DITCHES WITH INTERMITTENT FLOW
Not to Scale

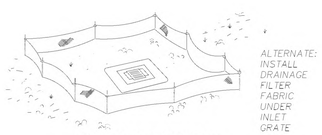

SILT FENCE PROTECTION
IN DITCHES WITH INTERMITTENT FLOW
Not to Scale

EROSION CONTROLS & BEST MANAGEMENT PRACTICES (BMP's)

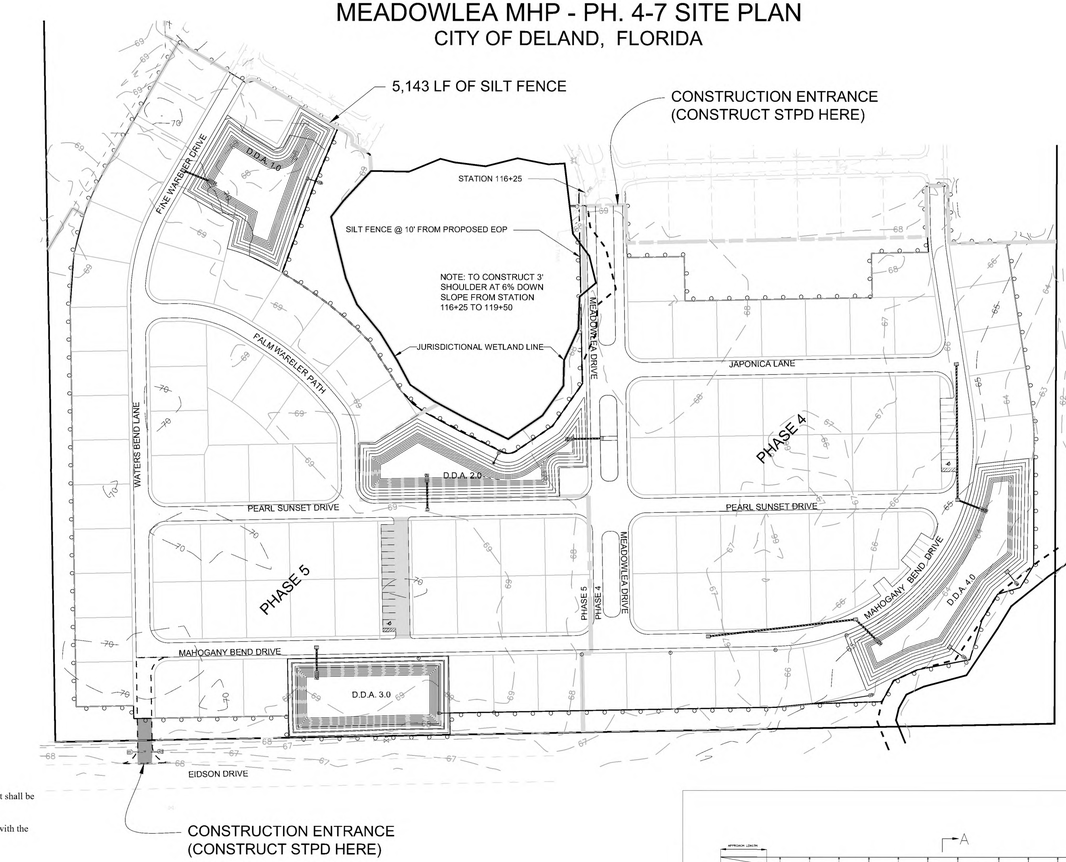

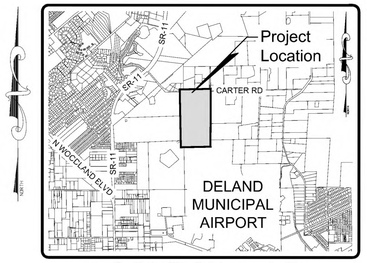

LOCATION MAP
SCALE: 1" = 4000'
DELAND, FLORIDA
SECTION 27, TOWNSHIP 16 SOUTH, RANGE 30 EAST

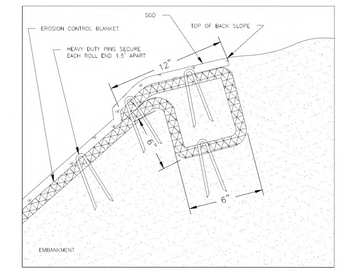

EROSION CONTROL BLANKET
GROUND FASTENING DETAIL
Not to Scale

INSTALL TOTAL OF 2,517 LF
FABRIC SILT FENCE

CITY OF DELAND PROJECT
No. SP22-211

General Notes:

1. A copy of the Notice of Intent (NOI) or letter from the Department of Environmental Protection (DEP) confirming coverage under this Generic Permit shall be posted at the construction site in a prominent place for public viewing (such as alongside a building permit).
2. The discharge of hazardous substances or oil in the stormwater discharge(s) from a facility or activity shall be prevented or minimized in accordance with the applicable stormwater pollution prevention plan for the facility or activity.
3. The permittee shall provide for compliance with the terms and schedule of this plan beginning with the initiation of construction activities.
4. Permittee shall adhere to the State of Florida DEP Generic Permit for Stormwater Discharge from Large and Small Construction Activities.
5. Preserve existing vegetation where attainable and stabilize disturbed portions of the site to prevent erosion. Stabilization measures include permanent seeding, sod, preservation of existing mature vegetation and protection of existing trees. Stabilization measures shall be initiated as soon as practicable, but in no case more than 7 days, in portions of the site where construction activities have temporarily or permanently ceased.
6. Each plan shall include a description of structural practices, to divert flows from exposed soils, store flows, retain sediment on-site, or otherwise limit runoff and the discharge of pollutants from exposed areas of the site. Such practices may include silt fences, swales, check dams, storm drain inlet protection, permanent sediment basins or Drainage Retention Areas (D.R.A.'s).
7. Construct temporary Sediment Control Basins at each point of discharge into D.R.A.'s.
8. Controls for Other Potential Pollutants.
   (1) Waste Disposal. The plan shall assure that waste, such as discarded building materials, chemicals, litter, and sanitary waste are properly controlled in accordance with all applicable state, local, and federal regulations. This permit does not authorize the discharge of solid materials, including building materials, to surface waters of the State or an Municipal Separate Storm Sewer System (MS4).
   (2) The plan shall assure that off-site vehicle tracking of sediments and the generation of dust is minimized.
   (3) The plan shall be consistent with applicable State and local waste disposal, sanitary sewer or septic system regulations.
   (4) The plan shall address the proper application rates and methods for the use of fertilizers, herbicides and pesticides at the construction site and set forth how these procedures will be implemented and enforced. Nutrients shall be applied only at rates necessary to establish and maintain vegetation.
   (5) The plan shall ensure that the application, generation, and migration of toxic substances is limited and that toxic materials are properly stored and disposed.
9. **A qualified inspector (provided by the operator) shall inspect all points of discharge into surface waters of the State or a Municipal Separate Storm Sewer System (MS4); disturbed areas of the construction site that have not been finally stabilized; areas used for storage of materials that are exposed to precipitation; structural controls; and, locations where vehicles enter or exit the site, at least once every seven calendar days and within 24 hours of the end of a storm that is 0.50 inches or greater in accordance with the Generic Permit.**
10. The permittee shall retain copies of stormwater pollution prevention plans and all reports required by this permit, and records of all data used to complete the NOI to be covered by this permit, for a period of at least three years from the date that the site is finally stabilized.
11. The permittee shall retain a copy of the stormwater pollution prevention plan and all reports, records and documentation required by this permit at the construction site, or an appropriate alternative location as specified in the NOI, from the date of project initiation to the date of final stabilization.
12. The permittee shall submit a completed Notice of Termination (NOT) (DEP Form 62-621.300(6)), signed in accordance with Part VII.C. of this permit, within 14 days of final stabilization of the site to terminate coverage under this permit.
13. A permittee shall submit a NOI to the following address:

    NPDES Stormwater Notices Center, MS# 2510
    Florida Department of Environmental Protection
    2600 Blair Stone Road
    Tallahassee, Florida 32399-2400

14. Projects that discharged stormwater associated with construction activity to a MS4 shall submit a copy of the NOI to the operator of the MS4.

Notes:

1. All existing storm water drainage patterns and channels outside the construction areas shown on these plans are to be maintained. The contractor shall notify the engineer if the work appears to interrupt an existing storm water drainage pattern. The contractor shall maintain a clear path for all surface water drainage structures and ditches during all phases of construction such that impact to construction and/or surrounding facilities is minimized. The contractor shall be responsible for any erosion, sediment transport, disturbed foundations, impact to structures, and any other damage caused during construction.
2. The contractor shall prevent the discharge of sediment due to construction operations. Approved erosion control devices shall be installed to prevent discharge of sediment into a dry or wet watercourse. Recommended erosion control shall consist of silt fence, or other erosion control methods as shown or approved by the project engineer. All new and existing drain pipes and structures shall be flushed clean after construction.
3. Provide erosion control blanket for all slopes 2:1 (horizontal to vertical) or steeper.
5. Swales and disturbed areas shall be sodded or seeded and mulched as soon as practical.
6. Should additional erosion and sedimentation controls be needed, then the contractor needs to prevent the discharge of turbid waters off the project site.
7. This plan provides reasonable assurance that the proposed construction activities will not result in erosion and sediment deposition in wetlands or off-site, adverse impacts to wetlands, off-site flooding or violation of water quality standards.

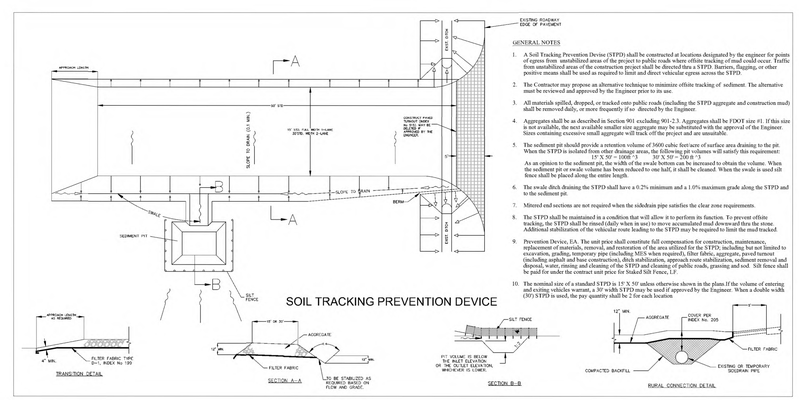

Project Information:

1. This plan is intended for use in conjunction with the Major Site Plan for this project.
2. The construction activities on this site consist of and will be performed in the following order: clearing and grubbing, excavation of the proposed roadway and drainage, construct improvements.
3. The estimated project area is 22.31 acres. The area to be disturbed by construction is 22.31 acres.
4. The topography of the area is gently sloping to sloping and naturally delineates the drainage basins as shown on the Predevelopment Plan and Drainage Plan. Existing soils are 100% Candler Sand, a type "A" hydrologic soil, which is well-drained to excessively drained sand according to the National Resource Conservation Service (NRCS) classification.

Stabilization Schedule:
(Required to be completed by Contractor)

Major Construction Activities:
Start Date
End Date

Cease Construction Activities:
Temporary Dates

Permanent Date

Date that Stabilization Measures were Initiated:

Note: Install erosion control features prior to any construction activities on this site.

Permittee's Certification:

The undersigned ensures that the surface water and stormwater management measures proposed in the plan will be effectively implemented until completion of the project or until the permanent surface water management system is operational.

Signature Date

Print Name

Contractor's Certification:

"I certify under penalty of law that I understand, and shall comply with, the terms and conditions of the State of Florida Generic Permit for Stormwater Discharge from Large and Small Construction Activities and this Stormwater Pollution Prevention Plan prepared thereunder."

Signature Date

Print Name

Address

Phone Number

INFORMATION FOR ELECTRONICALLY SIGNED AND SEALED DOCUMENTS

IF THIS ITEM HAS BEEN ELECTRONICALLY SIGNED AND SEALED IT USES A SHA-1 AUTHENTICATION CODE. PRINTED COPIES OF THIS DOCUMENT ARE NOT CONSIDERED SIGNED AND SEALED AND THE SHA-1 AUTHENTICATION CODE MUST BE VERIFIED ON ANY ELECTRONIC COPIES.

NOTWITHSTANDING, PRINTED COPIES ARE VALID IF PHYSICALLY SIGNED, DATED AND SEALED WITH THE ENGINEER'S EMBOSSED SEAL.

Date:	By:	Revisions:
3/27/23	BIL	REVISED PER CIT OF DELAND COMMENTS.

Designed: MWR
Drawn: BIL
Checked: MWR
Scale: 1" = 60'
Project: 2022-04
Date: 10-14-2022
File: Meadowlea Village Ph. 4-7.dwg

MICHAEL W. RADCLIFFE ENGINEERING, INC.
2911 S.E. Lake Weir Avenue Ocala, FL 34471 (352) 629-5500 FAX (352) 629-8010
Certificate No. EB-0006198 • Michael W. Radcliffe P.E. #31170 • Christopher A. Gwin P.E. #68568
www.radcliffeengineering.com

COPYRIGHT © 2023 Michael W. Radcliffe Engineering, Inc. All Rights Reserved

Project Name: Meadowlea Village Ph. 4&5
Sheet Name: Drainage Plan

Sheet No. C021 of C021

X:\MWRE Projects\Meadowlea MHP\2022-04 Meadowlea Village Ph. 4-7\Dwgs\CAD\Meadowlea Village Ph. 4-7.dwg 3/28/2023 3:25 PM

Notes:
1.All tracer wire shall be 10 gauge. Directional bores require to have two 10 gauge wires that are pulled with directional drill. Open cut may use only one 10 gauge wire. Wire length must have enough slack to be extended a minimum of 18" above grade for use.
2. Mechanical Joint Valve shall be manufactured by Clow, Mueller, Kennedy, or American Flow Control.

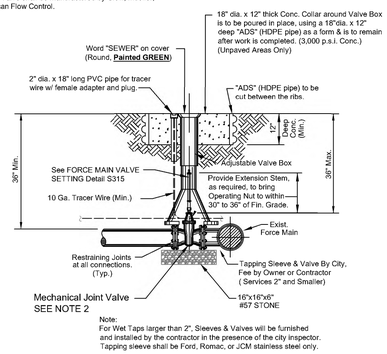

Note:
For Wet Taps larger than 2", Sleeves & Valves will be furnished and installed by the contractor in the presence of the city inspector. Tapping sleeve shall be Ford, Romac, or JCM stainless steel only.

DATE: 11/05/2021 | **FORCE MAIN TAPPING SLEEVE & VALVE** | **S407**

City of DeLand - Standard Details

CITY OF DELAND, FLORIDA
1102 S. GARFIELD AVENUE, DELAND, FLORIDA 32724

DATE: *11/05/2021*
CHECKED BY: *NAME*
SCALE: *NOT TO SCALE*
DRAWN BY: *ERIC SAMPSON*

TITLE: *SANITARY DETAILS*
FILE: *drive letter/details locations*

PAGE 1 OF 5

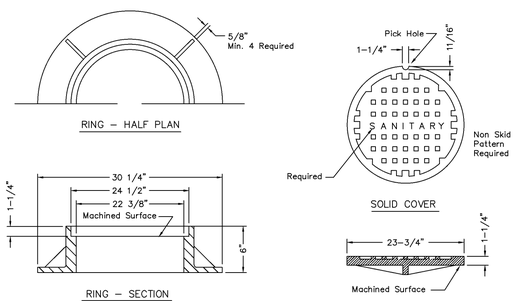

NOTE:
Manufacturers model of storm ring and cover to be approved by City Engineer.

DATE: 11/05/2021 **SANITARY MANHOLE COVER - USF 170-E** **S301**

City of DeLand - Standard Details

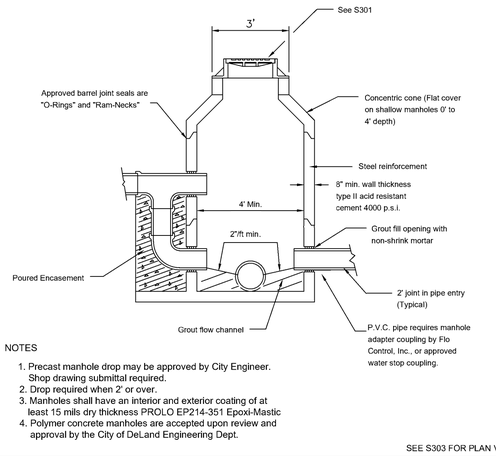

NOTES

1. Precast manhole drop may be approved by City Engineer. Shop drawing submittal required.
2. Drop required when 2' or over.
3. Manholes shall have an interior and exterior coating of at least 15 mils dry thickness PROLO EP214-351 Epoxi-Mastic
4. Polymer concrete manholes are accepted upon review and approval by the City of DeLand Engineering Dept.

SEE S303 FOR PLAN VIEW

DATE: 11/05/2021 **SANITARY MANHOLE** **S302**

City of DeLand - Standard Details

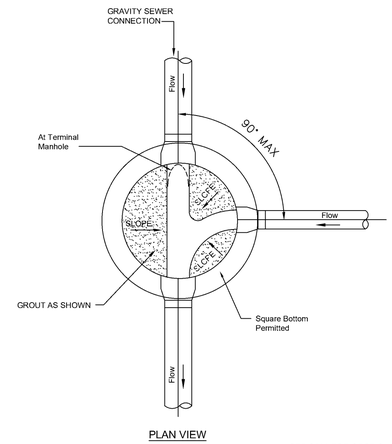

SEE S302 FOR SECTION

DATE: 11/05/2021 **SANITARY MANHOLE** **S303**

City of DeLand - Standard Details

NOTES
1. PRECAST MANHOLE DROP MAY BE APPROVED BY CITY ENGINEER. SHOP DRAWING SUBMITTAL REQUIRED.
2. DROP REQUIRED WHEN 2' OR OVER.
3. MANHOLES SHALL HAVE AN INTERIOR AND EXTERIOR COATING OF AT LEAST 15 MILS DRY THICKNESS PROLO EP214–351 EPOXI–MASTIC OR KOPPERS BITUMASTIC BLACK SOLUTION 300M.

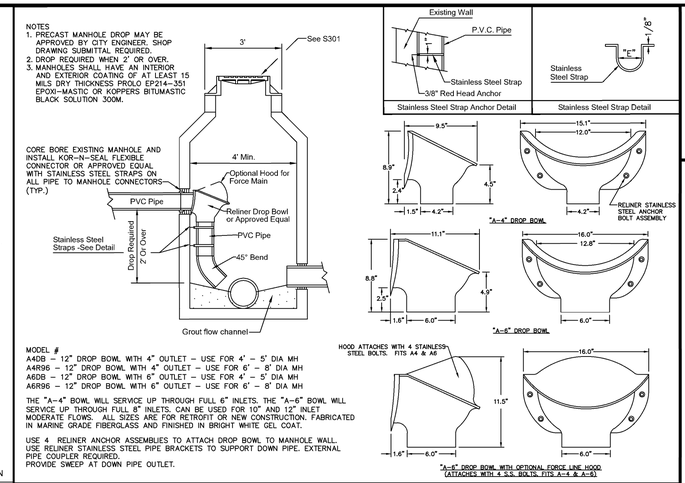

MODEL #
A4DB – 12" DROP BOWL WITH 4" OUTLET – USE FOR 4' – 5' DIA MH
A4R96 – 12" DROP BOWL WITH 4" OUTLET – USE FOR 6' – 8' DIA MH
A6DB – 12" DROP BOWL WITH 6" OUTLET – USE FOR 4' – 5' DIA MH
A6R96 – 12" DROP BOWL WITH 6" OUTLET – USE FOR 6' – 8' DIA MH

THE "A–4" BOWL WILL SERVICE UP THROUGH FULL 6" INLETS. THE "A–6" BOWL WILL SERVICE UP THROUGH FULL 8" INLETS. CAN BE USED FOR 10" AND 12" INLET MODERATE FLOWS. ALL SIZES ARE FOR RETROFIT OR NEW CONSTRUCTION. FABRICATED IN MARINE GRADE FIBERGLASS AND FINISHED IN BRIGHT WHITE GEL COAT.

USE 4 RELINER ANCHOR ASSEMBLIES TO ATTACH DROP BOWL TO MANHOLE WALL. USE RELINER STAINLESS STEEL PIPE BRACKETS TO SUPPORT DOWN PIPE. EXTERNAL PIPE COUPLER REQUIRED.
PROVIDE SWEEP AT DOWN PIPE OUTLET.

DATE: 11/05/2021 **SANITARY MANHOLE - INSIDE DROP FOR GRAVITY & FORCEMAIN** **S304**

City of DeLand - Standard Details

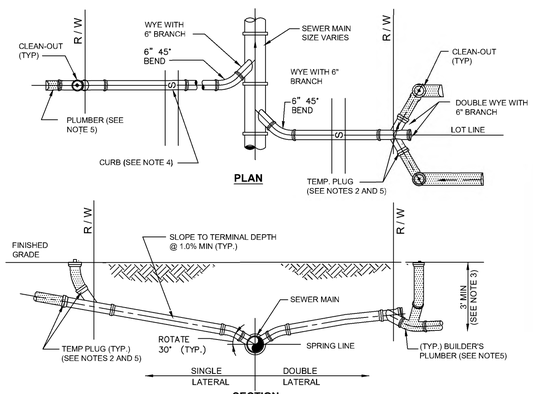

NOTES:
1. INVERT OF SERVICE LATERAL MUST BE ABOVE SPRING LINE.
2. SERVICE LATERAL SHALL BE CAPPED BY THE CONTRACTOR.
3. WYE SHALL BE NO SHALLOWER THAN 3-FEET AND NO DEEPER THAN 5-FEET.
4. CUT OR CAST "S" IN CONCRETE CURB AT SEWER LATERAL LOCATION AND PAINT GREEN.
5. PLUMBER SHALL REMOVE PLUG, INSTALL CLEAN-OUT, AND CONNECT SERVICE LATERAL TO HOUSE.

DATE: 11/05/2021 **SANITARY SERVICE LATERIALS** **S305**

City of DeLand - Standard Details

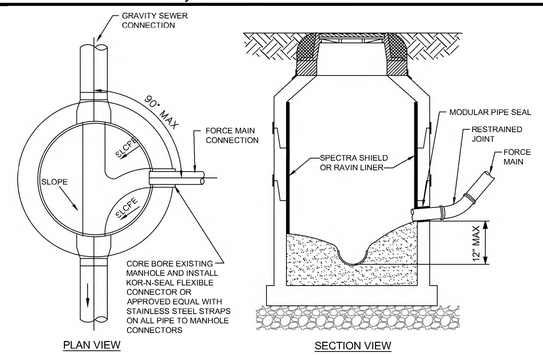

NOTES:
1. FORCE MAIN ORIENTED TO FACILITATE FLOW AND SHALL ENTER MANHOLE WITHIN 1' ABOVE INVERT OF THE EFFLUENT PIPE.
2. BENCH AS REQUIRED FOR NEW FORCE MAIN.
3. MANHOLE RECEIVING FORCE MAIN AND NEXT MANHOLE SHALL BE LINED. EXISTING MANHOLES RECEIVING FORCE MAIN SHALL BE LINED WITH SPECTRA SHIELD OR RAVIN.
4. CONTRACTOR TO COORDINATE THE PRESENCE OF UTILITIES INSPECTOR DURING CORING AND CONNECTIONS TO EXISTING MANHOLES.

DATE: 11/05/2021 **FORCE MAIN TO GRAVITY SEWER CONNECTION** **S306**

City of DeLand - Standard Details

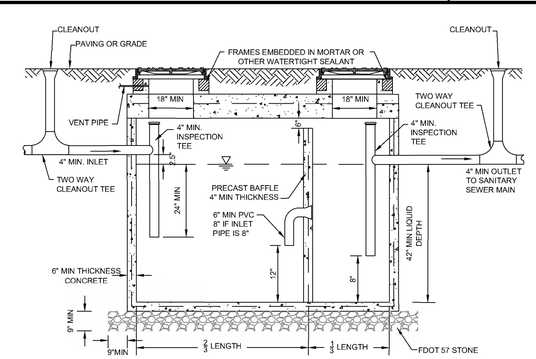

NOTES:
1. SPECIFIC DESIGN DETAILS MUST IN ALL ASPECTS MEET APPLICABLE FLORIDA PLUMBING AND ADMINISTRATIVE CODE.
2. SIZE GREASE INTERCEPTOR - MINIMUM SIZE 750 GAL; MAXIMUM SIZE 1250 GAL.
3. INTERCEPTORS SHALL BE WATER AND GAS TIGHT.
4. ALL FIXTURES LOCATED IN FOOD AND BEVERAGE PREPARATION AREAS SHALL BE ROUTED THOUGH GREASE INTERCEPTOR. RESTROOM WASTE SHALL NOT BE ROUTED THROUGH INTERCEPTOR.
5. BAFFLE REQUIRED; ALTERNATIVE DESIGNS ARE ACCEPTABLE THAT MEET FLORIDA PLUMBING AND ADMINISTRATIVE CODE.
6. LOADS:COVER TO MEET H-20 TRUCK WHEELS WITH 30% IMPACT PER AASHTO. TRAFFIC BEARING FRAME AND COVER TO MEET FDOT STANDARDS AND SHALL BE IMPRINTED WITH THE WORDS "GREASE TRAP".

DATE: 11/05/2021 **GREASE TRAP** **S307**

City of DeLand - Standard Details

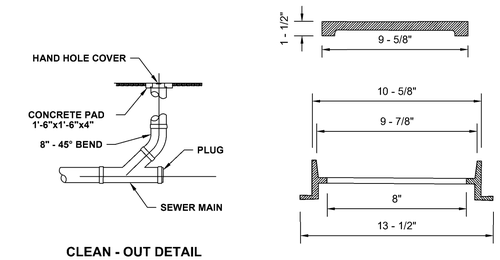

NOTE: HAND HOLE COVER TO BE U.S. FOUNDRY 7621 OR EQUAL

DATE: 11/05/2021 **CLEAN - OUT** **S308**

City of DeLand - Standard Details

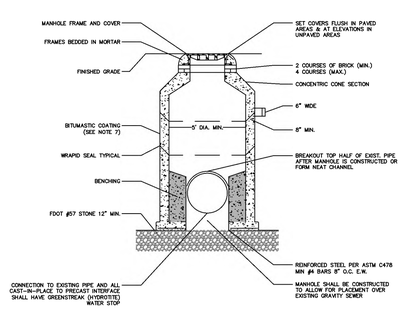

NOTES:

1. DOGHOUSE OPENING MAY ONLY BE USED WHEN PLACING A NEW MANHOLE OVER AN EXISTING LINE; OTHERWISE, THE OPENING MUST BE CAST. SIZE, LOCATION AND ANGLE OF ENTRY SHOULD BE AS REQUIRED BY THE PLANS.
2. OPENINGS IN PRE–CAST UNITS ARE TO BE 4" MINIMUM TO 8" MAXIMUM LARGER THAN THE OUTSIDE DIAMETER OF THE PROPOSED PIPE.
3. MANHOLE COVERS TYPICAL FOR ALL FRAME TYPES.
4. WRAPID SEAL MUST BE USED ON ALL JOINTS, CASTINGS AND RISER RINGS: ON ALL JOINTS ON ROUND AIR RELEASE AND ROUND MANHOLE STRUCTURES.
5. WRAPID SEAL MUST BE USED IN ACCORDANCE WITH MANUFACTURER'S RECOMMENDATIONS.
6. MAX. MANHOLE DEPTH SHALL BE 15' TO LOWEST PIPE INVERT.
7. MANHOLES SHALL HAVE AN INTERIOR AND EXTERIOR COATING OF AT LEAST 15 MILS DRY THICKNESS PROLO EP214–351 EPOXI–MASTIC OR KOPPERS BITUMASTIC BLACK SOLUTION 300M.
8. POLYMER CONCRETE MANHOLES ARE ACCEPTED UPON REVIEW AND APPROVAL BY THE CITY OF DELAND ENGINEERING DEPT.

DATE: 11/05/2021 **DOGHOUSE MANHOLE** **S309**

City of DeLand - Standard Details

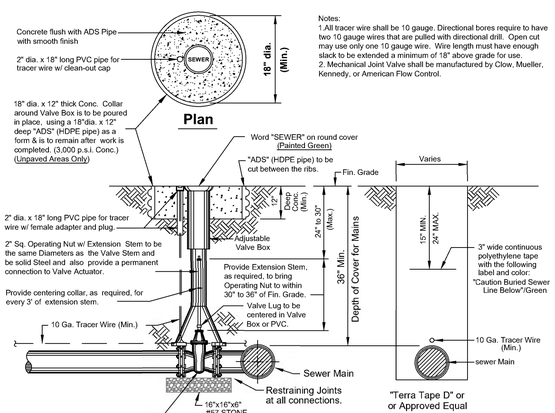

Notes:
1.All tracer wire shall be 10 gauge. Directional bores require to have two 10 gauge wires that are pulled with directional drill. Open cut may use only one 10 gauge wire. Wire length must have enough slack to be extended a minimum of 18" above grade for use.
2. Mechanical Joint Valve shall be manufactured by Clow, Mueller, Kennedy, or American Flow Control.

DATE: 11/05/2021 **FORCE MAIN VALVE SETTING** **S315**

City of Deland - Standard Details

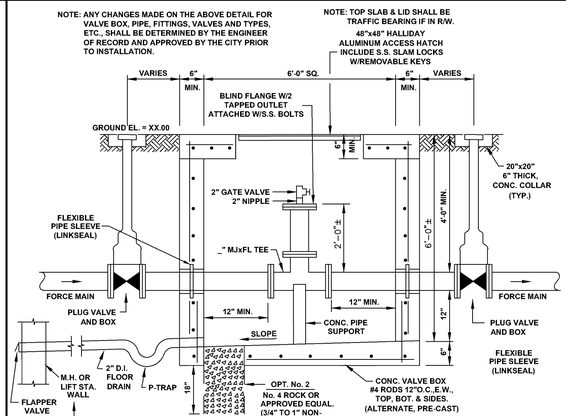

DATE: 11/05/2021 **POLY PIG LAUNCHER** **S310**

City of DeLand - Standard Details

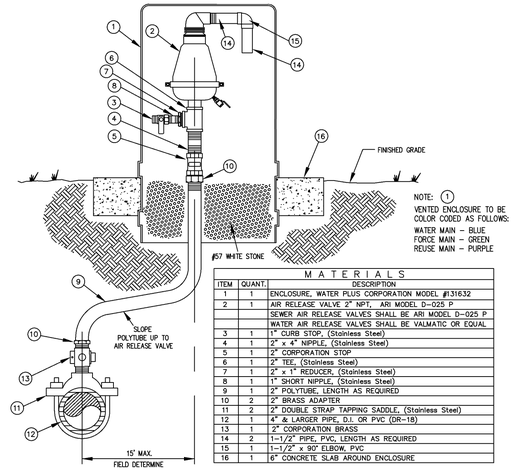

M A T E R I A L S		
ITEM	QUANT.	DESCRIPTION
1	1	ENCLOSURE, WATER PLUS CORPORATION MODEL #131632
2	1	AIR RELEASE VALVE 2" NPT, ARI MODEL D–025 P
		SEWER AIR RELEASE VALVES SHALL BE ARI MODEL D–025 P
		WATER AIR RELEASE VALVES SHALL BE VALMATIC OR EQUAL
3	1	1" CURB STOP, (Stainless Steel)
4	1	2" x 4" NIPPLE, (Stainless Steel)
5	1	2" CORPORATION STOP
6	1	2" TEE, (Stainless Steel)
7	1	2" x 1" REDUCER, (Stainless Steel)
8	1	1" SHORT NIPPLE, (Stainless Steel)
9	1	2" POLYTUBE, LENGTH AS REQUIRED
10	2	2" BRASS ADAPTER
11	2	2" DOUBLE STRAP TAPPING SADDLE, (Stainless Steel)
12	1	4" & LARGER PIPE, D.I. OR PVC (DR–18)
13	1	2" CORPORATION BRASS
14	2	1–1/2" PIPE, PVC, LENGTH AS REQUIRED
15	1	1–1/2" x 90° ELBOW, PVC
16	1	6" CONCRETE SLAB AROUND ENCLOSURE

DATE: 11/05/2021 **OFFSET AIR RELEASE VALVE** **S311**

City of DeLand - Standard Details

CITY OF DELAND, FLORIDA
1102 S. GARFIELD AVENUE, DELAND, FLORIDA 32724

DATE: 11/05/2021
CHECKED BY: NAME
SCALE: NOT TO SCALE
DRAWN BY: ERIC SAMPSON

TITLE: SANITARY DETAILS

FILE: drive letter/details locations

PAGE 2 OF 5

SPARE PARTS

1. VACUUM PUMP AND FLOAT CHECK VALVE
2. CHECK VALVE
3. CW OR CCW IMPELLER
4. PARKER SOLENOID VALVE (25 PSI)
5. MECHANICAL SEAL
6. SONIC START VACUUM DOME HOUSING
7. SONIC START REPLACEMENT PRIME SENSOR

MOTORS:
THE PUMP MOTORS SHALL BE VERTICAL, SOLID SHAFT, NEMA P-BASE, SQUIRREL-CAGE INDUCTION TYPE, SUITABLE FOR 3 PHASE, 60 CYCLE, 480 VOLT ELECTRIC CURRENT. THEY SHALL HAVE CLASS F INSULATION. INSULATION TEMPERATURE SHALL, HOWEVER, BE LIMITED TO CLASS B. THE MOTORS SHALL HAVE NORMAL STARTING TORQUE AND LOW-STARTING CURRENT, AS SPECIFIED BY NEWMAN DESIGN B CHARACTERISTICS. THEY SHALL BE OPEN DRIP-PROOF DESIGN WITH FORCED AIR CIRCULATION BY INTEGRAL FAN. OPENINGS FOR VENTILATION SHALL BE UNIFORMLY SPACED AROUND THE FRAME. LEADS SHALL BE TERMINATED IN CAST CONNECTION BOX AND SHALL BE CLEARLY IDENTIFIED.
THE MOTORS SHALL HAVE 1.15 SERVICE FACTOR. THE SERVICE FACTOR SHALL BE RESERVED THE OWNER'S PROTECTION. THE MOTORS SHALL NOT BE OVERLOADED BEYOND THEIR NAMEPLATE RATING, AT THE DESIGN CONDITIONS, NOR AT ANY HEAD IN THE OPERATING RANGE AS SPECIFIED UNDER OPERATING CONDITIONS.
THE MOTOR-PUMP SHAFT SHALL BE CENTERED, IN RELATION TO THE MOTOR BASE, WITHIN 0.005".
THE SHAFT RUBOUT SHALL NOT EXCEED 0.003".
THE MOTORS SHAFT SHALL BE EQUAL OR EXCEED THE DIAMETER SPECIFIED UNDER MAIN PUMPS AT ALL POINTS FROM IMMEDIATELY BELOW THE TOP BEARING TO THE TOP OF THE IMPELLER HUB. A BEARING CAP SHALL BE PROVIDED TO HOLD THE BOTTOM MOTOR BEARING IN A FIXED POSITION. BEARING HOUSINGS SHALL BE PROVIDED WITH FITTING FOR LUBRICATION AS WELL AS PURGING OLD LUBRICANT. THE MOTORS SHALL BE FITTED WITH HEAVY LIFTING EYES OR LUGS, EACH CAPABLE OF SUPPORTING THE ENTIRE WEIGHT OF THE PUMP AND MOTOR.

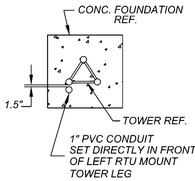

CONDUIT DETAIL

SECTION "A-A"
N.T.S.

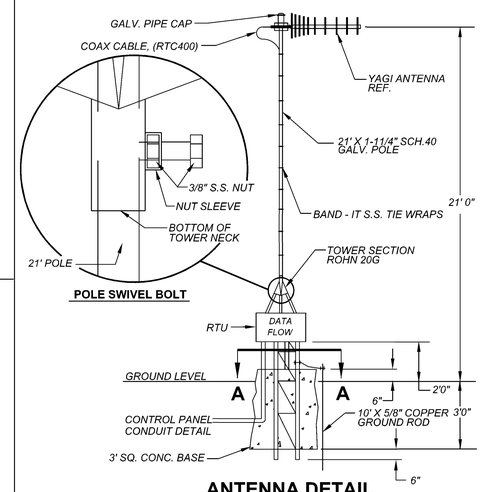

ANTENNA DETAIL
N.T.S.

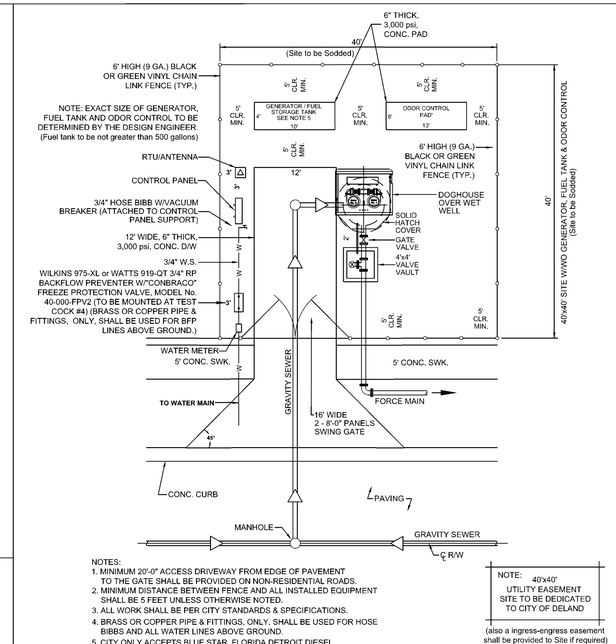

NOTES:
1. MINIMUM 20'-0" ACCESS DRIVEWAY FROM EDGE OF PAVEMENT TO THE GATE SHALL BE PROVIDED ON NON-RESIDENTIAL ROADS.
2. MINIMUM DISTANCE BETWEEN FENCE AND ALL INSTALLED EQUIPMENT SHALL BE 5 FEET UNLESS OTHERWISE NOTED.
3. ALL WORK SHALL BE PER CITY STANDARDS & SPECIFICATIONS.
4. BRASS OR COPPER PIPE & FITTINGS, ONLY, SHALL BE USED FOR HOSE BIBBS AND ALL WATER LINES ABOVE GROUND.
5. CITY ONLY ACCEPTS BLUE STAR, FLORIDA DETROIT DIESEL, OR CATERPILLAR GENERATORS.
6. POLYMER CONCRETE WET WELLS ARE ACCEPTED UPON REVIEW AND APPROVAL BY THE CITY OF DELAND ENGINEERING DEPT.

NOTE: 40'x40' UTILITY EASEMENT SITE TO BE DEDICATED TO CITY OF DELAND
(also a ingress-egress easement shall be provided to Site if required)

LIFT STATION SITE PLAN

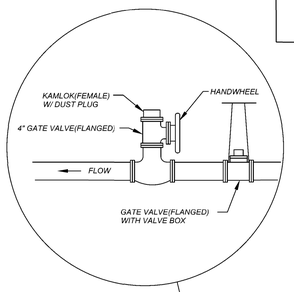

SEE PAGE 2 & 3 FOR CONTROL PANEL RACK AND SET-UP

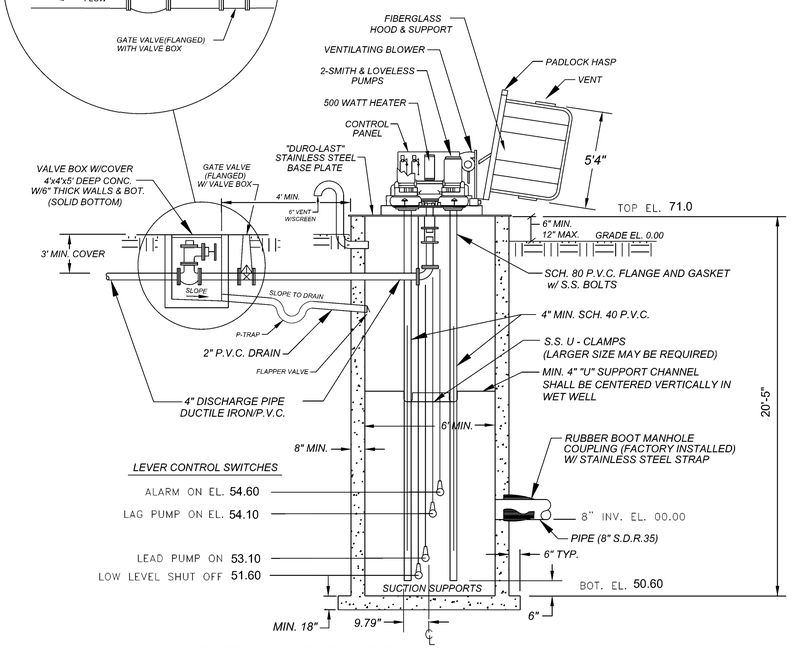

SECTIONAL ELEVATION
N.T.S.

1. ALL MAJOR COMMERCIAL OR RESIDENTIAL PROJECTS MUST PROVIDE AN ON- SITE GENERATOR OR CONTRIBUTE TO THE GENERATOR FUND.
2. GENERATOR MAKE SHALL BE A BLUE STAR, FLORIDA DETROIT DIESEL, OR CATERPILLAR.
3. DIESEL FUEL TANK WITH THREE DAY RUN TIME MIN. (500 Gallon Maximum Storage)
4. AUTOMATIC TRANSFER SWITCH SHALL BE REQUIRED.
5. GENERATOR SHALL BE CONNECTED TO THE REMOTE TELEMETRY UNIT FOR MONITORING.
6. NEW SUBDIVISIONS OF 80 HOMES OR MORE WILL BE REQUIRED TO PROVIDE A UNIT W/ GENERATOR. (LESS THAN 80 HOMES WILL PAY A PRO RATA SHARE $450 PER UNIT)
7. POLYMER CONCRETE WET WELLS ARE ACCEPTED UPON REVIEW AND APPROVAL BY THE CITY OF DELAND ENGINEERING DEPT.

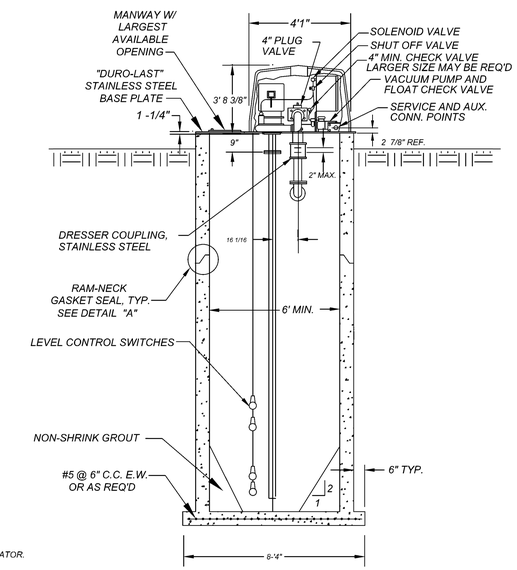

CROSS SECTION
N.T.S.

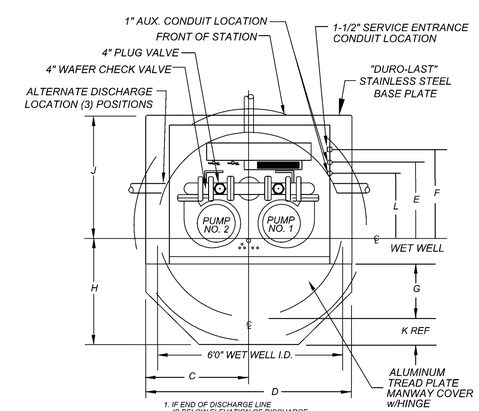

1. IF END OF DISCHARGE LINE IS BELOW ELEVATION OF DISCHARGE LINE @ POINT OF LEAVING WET WELL a PRIMING LOCK LOOP MAY BE REQ.'D. (CONSULT FACTORY)
2. IF DISCHARGE LINE IS LESS THAN 200' IN LENGTH AN ADDITIONAL CHECK VALVE OR PRIMING LOCK LOOP MAY BE REQ.'D. (CONSULT FACTORY)
3. PROVIDE 60" SLOPE IN WET WELL, AS REQ'D.
4. VOLUME IN GALLONS BETWEEN L.L. ON AND L.L. OFF SHOULD BE EQUAL OR GREATER THAN THE PUMPING RATE IN G.P.M.
5. MAXIMUM CAPACITY - 400 G.P.M.

PLAN VIEW
N.T.S.
MACH. CHAMBER (SHOWN LESS HOOD)

GENERAL SITE PLAN NOTES:

1. BACKFLOW PREVENTER SHALL BE, WILKINS 3/4" 975-XL RP or WATTS 3/4" 919-QT RP , W/ "CONBRACO" FREEZE PROTECTION VALVE, MODEL No. 40-000-FPV2, TO BE MOUNTED AT TEST COCK #4.
2. ALL 3/4" HOSE BIBBS SHALL ALSO HAVE A VACUUM BREAKER.
3. LIFT STATION SITE SHALL BE SODDED.
4. PRIOR TO ACCEPTANCE OF THIS LIFT STATION, CITY STAFF WILL OBSERVE THAT THIS STATION WILL PUMP DOWN TO THE CITY'S SPECIFIED CUT-OFF LEVEL UNDER THE CONDITIONS OF A FULL DISCHARGE PRESSURE SEWER, BEING PRESSURIZED W/ ALL OTHER PUMP STATIONS OPERATING, IF THERE EXISTS A MANIFOLD CONDITION. THE DEVELOPER WILL SUPPLY LABOR AND MATERIALS FOR THIS DEMONSTRATION.
5. DO NOT PLACE TRANSFORMERS OR OTHER APPURTENANCES WITHIN THE DESIGNATED EASEMENT THAT WILL IMPEDE MAINTENANCE ACTIVITIES OF THIS STATION.
6. ORIENTATE THE MANWAY TOWARD THE STREET SIDE FOR EASY ACCESS BY OPERATING & MAINTENANCE PERSONNEL.
7. PROVIDE ADEQUATE PAVING (CONC. OR ASPHALT) 12' WIDE DRIVE FROM STREET TO PUMP STATION FOR SAFE ACCESS OF EMERGENCY GENERATOR, SEWER CLEANER, AND OTHER MAINTENANCE VEHICLES.
8. FENCE WITH 6' HIGH COMMERCIAL GRADE CYCLONE FENCE, USING TWO 8 FOOT GATES . FENCE SHOULD BE LOCATED IN SUCH A WAY AS NOT TO INTERFERE WITH ANY PANEL DOORS OR HATCH OPENINGS, AND GATE POSITIONED TO ALLOW EASY ACCESS TO WET WELL. (BLACK OR GREEN VINYL COATED), (REFER TO SITE PLAN)
9. A 40' x 40' TRACT SHALL BE DEDICATED TO THE CITY OF DELAND FOR THE LIFT STATION SITE.
10. PROVIDE "DURO-LAST" STAINLESS STEEL BASE PLATE ON LIFT STATION.
11. BRASS OR COPPER PIPE & FITTINGS, ONLY, SHALL BE USED FOR BFP & HOSE BIBBS AND LINES ABOVE GROUND.
12. ALL SEWER AIR RELEASE VALVES SHALL BE 2" A.R.I. MODEL D-025TPO2.
13. MIN. 2'x2' AROUND AND 6' CLEARANCE ABOVE METER

CONTROLS:
THE CONTROL EQUIPMENT SHALL BE MOUNTED IN A NEMA TYPE 1 STEEL ENCLOUSURE WITH A REMOVABLE ACCESS COVER. THE CIRCUIT BREAKERS, STARTER RESET BUTTONS, AND CONTROL SWITCHES SHALL BE OPERABLE WITHOUT REMOVING THE ACCESS COVER, FOR DEADFRONT OPERATION.
A GFCI TYPE CONVENIENCE OUTLET SHALL BE PROVIDED ON THE SIDE OF THE CABINET FOR OPERATION OF 120 VOLT AC DEVICES. THERMAL MAGNETIC AIR CIRCUIT BREAKERS SHALL BE PROVIDED FOR BRANCH DISCONNECT SERVICE AND SHORT CIRCUIT PROTECTION OF ALL MOTOR CONTROL AND AUXILIARY CIRCUITS.
MAGNETIC ACROSS-THE-LINE STARTERS WITH UNDER-VOLTAGE RELEASE AND OVERLOAD COILS FOR EACH PHASE SHALL BE PROVIDED FOR EACH PUMP MOTOR TO GIVE POSITIVE PROTECTION. EACH SINGLE-PHASE AUXILIARY MOTOR SHALL BE EQUIPPED WITH AN OVER-CURRENT PROTECTION DEVICE IN ADDITION TO THE BRANCH CIRCUIT BREAKER, OR SHALL BE IMPEDANCE PROTECTED. ALL SWITCHES SHALL BE LABELED AND A CODED WIRING DIAGRAM SHALL BE PROVIDED.
TO CONTROL THE OPERATION OF THE PUMPS WITH VARIATIONS OF LIQUID LEVEL IN THE WET WELL, A MINIMUM OF FOUR (4) DISPLACEMENT SWITCHES SHALL BE PROVIDED. A 30' CORD SHALL BE PROVIDED WITH EACH SWITCH. THE CORD SHALL HAVE A CORROSION-RESISTANT VINYL JACKET AND BE MULTI-STRANDED IN ORDER TO PREVENT FATIGUE.
AN AUTOMATIC ALTERNATOR WITH MANUAL SWITCH SHALL BE PROVIDED TO CHANGE THE SEQUENCE OF OPERATION OF THE PUMPS EVERY EIGHT HOURS. ALTERNATING THE PUMPS AT LESS THAN EIGHT HOUR INTERVALS WILL NOT BE ACCEPTABLE. PROVISIONS SHALL ALSO BE MADE FOR THE PUMPS TO OPERATE IN PARALLEL SHOULD THE LEVEL IN THE WET WELL CONTINUE TO RISE ABOVE THE STARTING LEVEL FOR THE LAG PUMP.

WET WELL DIA.	DIM "A"	DIM "B"	DIM "C"	DIM "D"	DIM "E"	DIM "F"	DIM "G"	DIM "H"	DIM "J"	DIM "K"	DIM "L"
6'- 0"	2"	1'-1 13/16"	3'-4"	6'-8"	2'-1 3/8"	2'-5 7/8"	1'-8"	3'-10"	3'-5 1/2"	10"	1'-8 7/8"

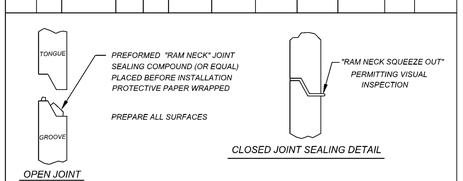

DETAIL "A"
N.T.S.

Note:
Air release valves shall be provided at all high points on force main.

Wet Well (Anti-Floation)

Displacement = XX,XXX lbs. Up
Structure = XX,XXX lbs. Down

Valve Vault (Anti-Floation)

Displacement = X,XXX lbs. Up
Structure = X,XXX lbs. Down

Index No.
30800

REVISED 5/31/07
REVISED 8/6/08
REVISED 10/12/09
REVISED 4/8/10
REVISED 8/1/13
REVISED 9/2/14
REVISED 5/15/17
REVISED 7/24/18
REVISED 11/05/21

SHEET 1 OF 3

City of DeLand, Engineering Services
1102 S. Garfield Avenue, DeLand, Florida 32724

DATE: 11/05/2021
CHECKED BY:
SCALE: NOT TO SCALE
DRAWN BY: ERIC SAMPSON

TITLE: SANITARY LIFT STATION

FILE: LIFTSTATION.dwg

DETAIL "A"

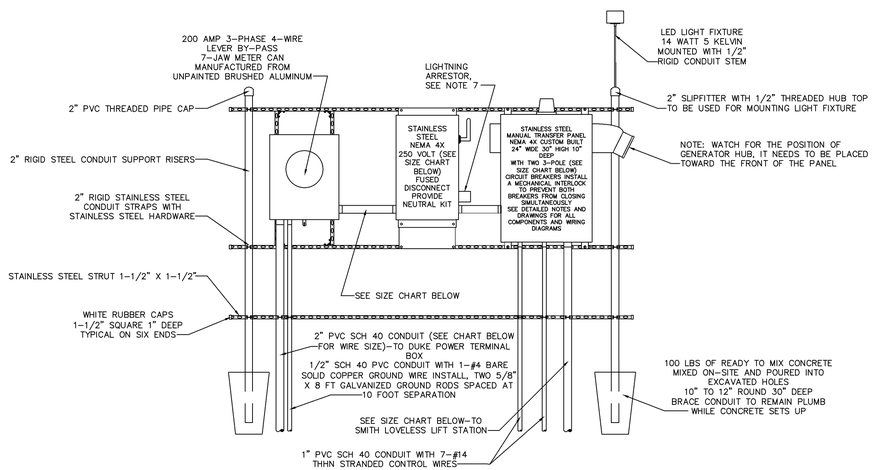

240 VOLT POWER RACK WITHOUT GENERATOR

DETAIL "B"

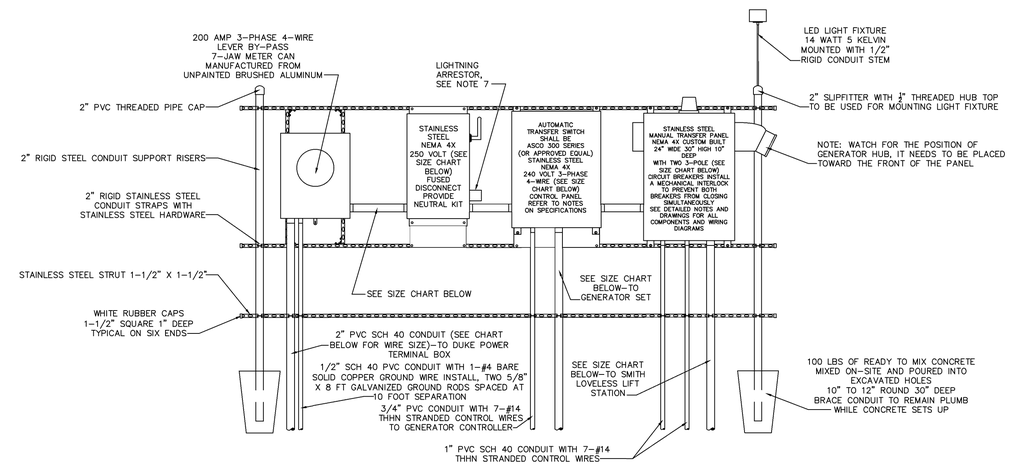

240 VOLT POWER RACK WITH GENERATOR AUTOMATIC TRANSFER SWITCH

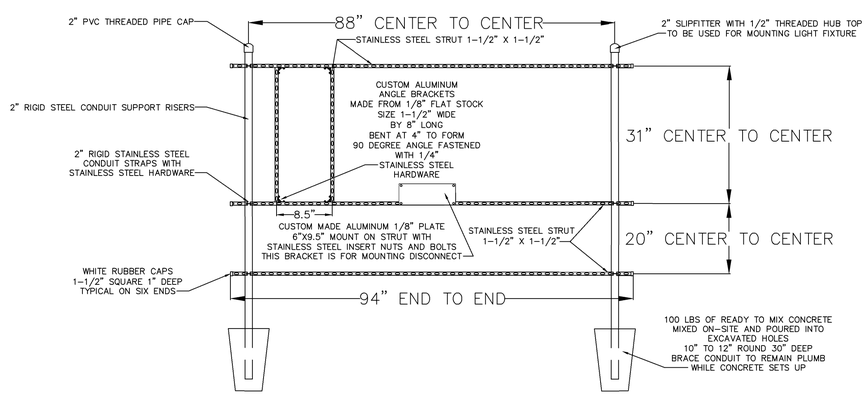

RACK FRAMING DETAILS
240 VOLT WITHOUT AUTOMATIC TRANSFER SWITCH

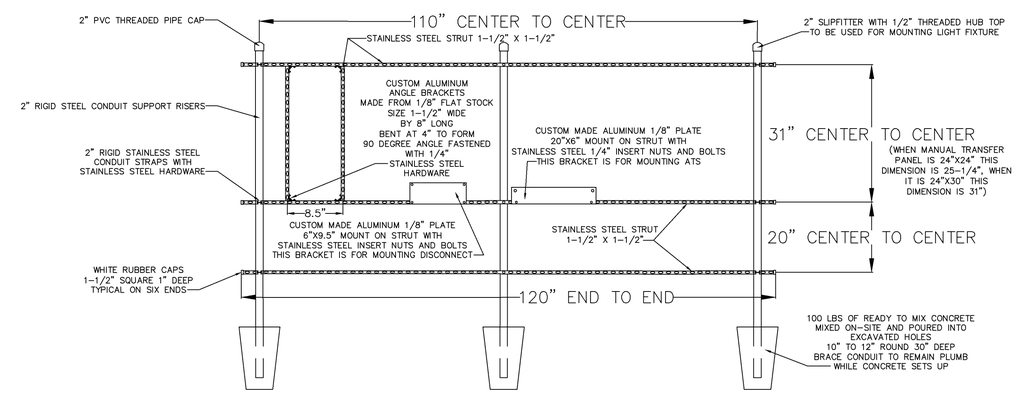

RACK FRAMING DETAILS
240 VOLT WITH AUTOMATIC TRANSFER SWITCH

CONTROL GENERATOR RECEPTACLE PANEL

1. ENCLOSURE : NEMA 4X STAINLESS, 304 GRADE, 14 GAUGE, GASKETED, #4 BRUSHED FINISH, U.L. AND CSA APPROVED, HASP AND STAPLE FOR PADLOCKING, INSIDE PRINT POCKET, STAINLESS STEEL HINGE. MIN. SIZE 24"x 24"x 8" FOR UP TO 15 H.P.
2. MAIN BREAKER : SQUARE D HEAVY DUTY SIZED PROPERLY FOR FULL LOAD OF STATION PLUS 25%.
3. EMERGENCY BKR.: SQUARE D HEAVY DUTY SIZED PROPERLY FOR FULL LOAD OF STATION PLUS 25%.
4. MECH. INTERLOCK: ALL ALUMINUM AND STAINLESS STEEL W/POSITIVE MEANS OF LOCKING OFF BREAKER NOT IN USE. THE BREAKERS WILL PROTRUDE THROUGH INNER DOOR.
5. RECEPTACLE: RUSSELL STOLL JRS1044FR (230 VOLT ONLY), MELTRIC PART #37-98047 (480 VOLT ONLY)
6. ANGLE ADAPTER: RUSSELL STOLL JAAB-10, 20 DEG. ADAPTER
7. LIGHTNING ARRESTOR: HEAVY DUTY, SQUARE D P/N SDSA3650
8. PHASE MONITOR: DIVERSIFIED P/N SLA-230-ASA, 8 PIN WITH N.O. AND N.C. CONTACTS WIRE TO TERMINAL FOR RTU EQUIPMENT.
9. HIGH WATER ALARM: RED, LEXAN, W/NO EXTERNAL SCREWS.
10. HWA RELAY: SQUARE D OR OMRON, 8 PIN DOUBLE POLE, DOUBLE THROW WIRED TO RTU TERMINAL.
11. ALARM HORN: RED, WHEELOCK P/N 31T-115 MOUNTED TO RED WEATHER PROOF CAST BOX ON EXTERIOR OF ENCLOSURE.
12. ALARM RELAY: SQUARE D OR OMRON, 8 PIN DOUBLE POLE, DOUBLE THROW WIRED TO RTU TERMINAL.
13. ALARM RESET/SIL: SQUARE D, WEATHER PROOF MOUNTED ON EXTERIOR OF ENCLOSURE.
14. ENCL. BACKPLATE: ALUMINUM, 12 GAUGE
15. TERMINAL STRIP: BUCHANON P/N 0625
16. GROUND LUG: BUCHANON P/N 824
17. NEUTRAL LUG: BUCHANON P/N 824
18. MAIN LOAD LUG: SQUARE D P/N U3
19. LABELS: ALL BREAKERS AND SWITCHES TO BE IDENTIFIED BY PERMANENTLY ATTACHED LABEL TO PANEL DOOR INTERIOR
20. MOUNTING SCREWS: STAINLESS STEEL 304
21. SCHEMATIC DWG.: PROTECTED BY PLASTIC COATING AND ATTACHED TO PANEL DOOR INTERIOR.
22. MANUFACTURER: STACON, ECS OR CITY OF DELAND APPROVAL.
23. R.T.U.: (DATA FLOW MELBOURNE FLA. (R.T.U. 204) OR EQUAL TO BE INSTALLED BY CITY- DEVELOPER TO BEAR ALL COSTS.
24. PROVIDE SPARE PARTS - SEE SPARE PARTS LIST
25. WET WELL TO BE COATED INSIDE AND OUT WITH MIN. 24 MILS OF COAL/TAR EPOXY
26. EQUIVALENT PRODUCTS CAN ONLY BE APPROVED UPON RECEIPT OF WRITTEN AUTHORIZATION FROM THE CITY OF DELAND.

SIZE CHART

STEP #1: DETERMINE LIFT STATION SIZE & SPECIFICATIONS FROM THE UTILITY CONTRACTOR OR CITY OF DELAND ENGINEERING DEPT.

STEP #2: MAKE NOTE OF THE FOLLOWING: THE VOLTAGE FOR THE STATION, THE NUMBER OF PUMPS (2 OR 3) & THE HORSEPOWER OF PUMPS.

STEP #3: REFER TO THE ELECTRICAL SERVICE DATA CHARTS FOR THE STANDARD 2 PUMP OR 3 PUMP STATION (FOUND ON SHEET 3 OF 3).

STEP #4: USE THE VOLTAGE COLUMN AND THE HORSEPOWER ROW TO FIND THE TOTAL STATION FULL LOAD AMPS.

STEP #5: UPON DETERMINING THE FULL LOAD AMPS OF THE STATION, THE SERVICE ENTRANCE SIZE SHALL NOT BE SMALLER THAN 100 AMPS. STATIONS THAT REQUIRE A SERVICE SIZE LARGER THAN 100 AMPS SHALL BE SIZED CLOSEST TO THE STANDARD SIZES LISTED BELOW.

SERVICE SIZE	CONDUIT SIZE	WIRE SIZE	BREAKER OR FUSE RATING
100 AMP	1-1/2"	#3 THHN CU	100 AMP
125 AMP	1-1/2"	#2 THHN CU	125 AMP
150 AMP	2"	#1 THHN CU	150 AMP
200 AMP	2"	3/0 THHN CU	200 AMP
225 AMP	2-1/2"	4/0 THHN CU	225 AMP

Index No.
30800
REVISED 11/05/21
SHEET 2 OF 3

City of DeLand, Engineering Services
1102 S. Garfield Avenue, DeLand, Florida 32724

DATE: *11/05/2021*
CHECKED BY:
SCALE: *NOT TO SCALE*
DRAWN BY: *ERIC SAMPSON*

TITLE: *SANITARY LIFT STATION*

FILE: *LIFT_STATION_DETAILS_A_B.dwg*

DETAIL "C"

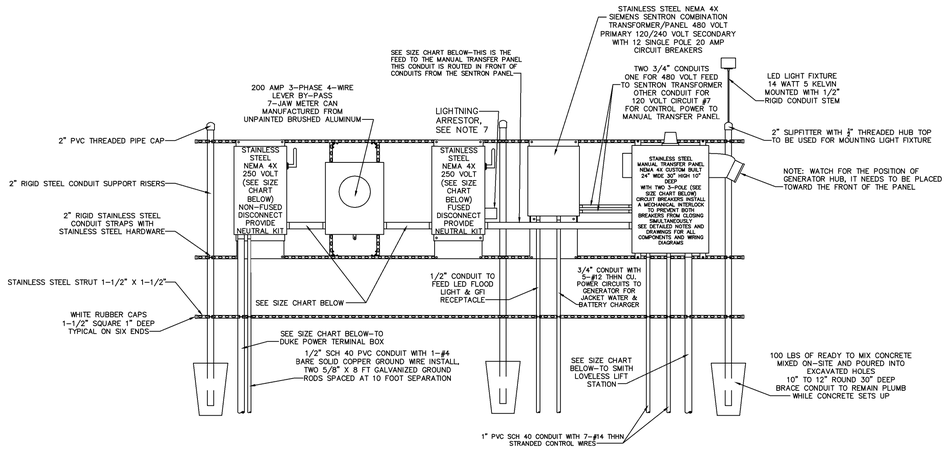

480 VOLT POWER RACK WITHOUT GENERATOR AUTOMATIC TRANSFER SWITCH

DETAIL "D"

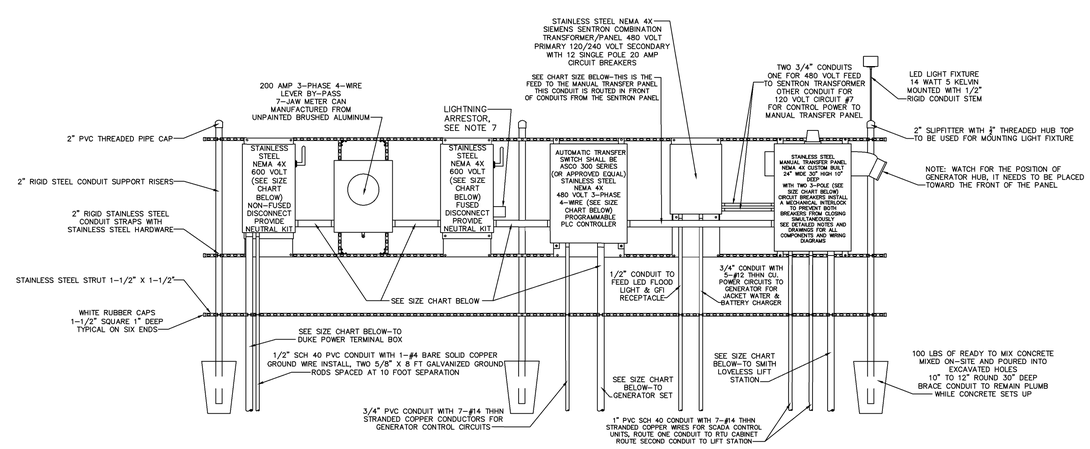

480 VOLT POWER RACK WITH GENERATOR WITH AUTOMATIC TRANSFER SWITCH

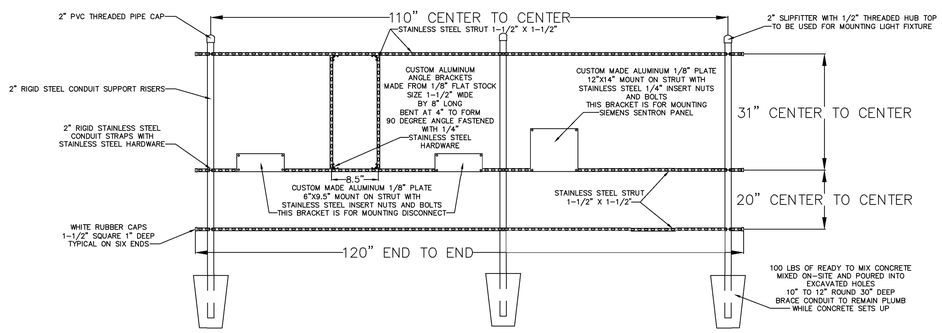

RACK FRAMING DETAILS 480 VOLT WITHOUT AUTOMATIC TRANSFER SWITCH

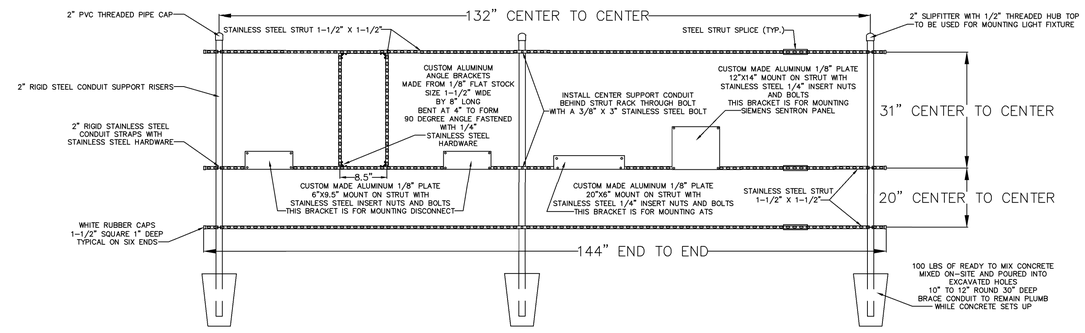

RACK FRAMING DETAILS 480 VOLT WITH AUTOMATIC TRANSFER SWITCH

CONTROL GENERATOR RECEPTACLE PANEL

1. ENCLOSURE ; NEMA 4X STAINLESS, 304 GRADE, 14 GAUGE, GASKETED, #4 BRUSHED FINISH, U.L. AND CSA APPROVED, HASP AND STAPLE FOR PADLOCKING, INSIDE PRINT POCKET, STAINLESS STEEL HINGE. MIN. SIZE 24" x 24"x 8" FOR UP TO 15 H.P.
2. MAIN BREAKER : SQUARE D HEAVY DUTY SIZED PROPERLY FOR FULL LOAD OF STATION PLUS 25%.
3. EMERGENCY BKR.: SQUARE D HEAVY DUTY SIZED PROPERLY FOR FULL LOAD OF STATION PLUS 25%.
4. MECH. INTERLOCK: ALL ALUMINUM AND STAINLESS STEEL W/POSITIVE MEANS OF LOCKING OFF BREAKER NOT IN USE. THE BREAKERS WILL PROTRUDE THROUGH INNER DOOR.
5. RECEPTACLE: RUSSELL STOLL JRS1044FR (230 VOLT ONLY), MELTRIC PART #37-98047 (480 VOLT ONLY)
6. ANGLE ADAPTER: RUSSELL STOLL JAAB-10, 20 DEG. ADAPTER
7. LIGHTNING ARRESTOR: HEAVY DUTY, SQUARE D F/N SDASA3650, OR INTERMATIC AG503C 600V.
8. PHASE MONITOR: DIVERSIFIED F/N SLA-230-ASA, 8 PIN WITH N.O. AND N.C. CONTACTS WIRE TO TERMINAL FOR RTU EQUIPMENT.
9. HIGH WATER ALARM: RED, LEXAN, W-/NO EXTERNAL SCREWS.
10. HWA RELAY: SQUARE D OR OMRON, 8 PIN DOUBLE POLE, DOUBLE THROW WIRED TO RTU TERMINAL.
11. ALARM HORN: RED, WHEELOCK F/N 31T-115 MOUNTED TO RED WEATHER PROOF CAST BOX ON EXTERIOR OF ENCLOSURE.
12. ALARM RELAY: SQUARE D OR OMRON, 8 PIN DOUBLE POLE, DOUBLE THROW WIRED TO RTU TERMINAL.
13. ALARM RESET/SIL: SQUARE D, WEATHER PROOF MOUNTED ON EXTERIOR OF ENCLOSURE.
14. ENCL. BACKPLATE: ALUMINUM, 12 GAUGE
15. TERMINAL STRIP: BUCHANON F/N 0625
16. GROUND LUG: BUCHANON F/N 824
17. NEUTRAL LUG: BUCHANON F/N 824
18. MAIN LOAD LUG: SQUARE D F/N U3
19. LABELS: ALL BREAKERS AND SWITCHES TO BE IDENTIFIED BY PERMANENTLY ATTACHED LABEL TO PANEL DOOR INTERIOR
20. MOUNTING SCREWS: STAINLESS STEEL 304
21. SCHEMATIC DWG.: PROTECTED BY PLASTIC COATING AND ATTACHED TO PANEL DOOR INTERIOR.
22. MANUFACTURER: STACON, ECS OR CITY OF DELAND APPROVAL.
23. R.T.U.: (DATA FLOW MELBOURNE F.L.A. (R.T.U. 204) OR EQUAL TO BE INSTALLED BY CITY- DEVELOPER TO BEAR ALL COSTS.
24. PROVIDE SFARE PARTS - SEE SPARE PARTS LIST
25. WET WELL TO BE COATED INSIDE AND OUT WITH MIN. 24 MILS OF COAL/TAR EPOXY
26. EQUIVALENT PRODUCTS CAN ONLY BE APPROVED UPON RECEIPT OF WRITTEN AUTHORIZATION FROM THE CITY OF DELAND.

ELECTRICAL SERVICE DATA STANDARD 2-PUMP WET WELL MOUNTED PUMP STATION

MAIN PUMP MOTOR SIZE	TOTAL STATION FULL LOAD AMPS		
RATED HP EACH	208 VOLT	230 VOLT	460 VOLT
1	17.6	15.3	7.6
1–1/2	21.8	18.9	9.5
2	25.9	22.5	11.3
3	33.1	28.8	14.5
5	47.7	41.4	20.7
7–1/2	65.3	56.7	28.4
10	80.8	70.2	35.1
15	117.0	101.7	50.9
20	148.1	128.7	64.4
25	190.44	160.2	80.1
30	215.3	187.2	93.6
40	---	---	120.6
50	---	---	150.0

ELECTRICAL SERVICE DATA STANDARD 3-PUMP WET WELL MOUNTED PUMP STATION

MAIN PUMP MOTOR SIZE	TOTAL STATION FULL LOAD AMPS		
RATED HP EACH	208 VOLT	230 VOLT	460 VOLT
1	27.3	23.7	11.9
1–1/2	33.3	28.9	14.5
2	39.3	34.1	17.1
3	49.6	43.2	21.6
5	70.6	61.4	30.7
7–1/2	96.1	83.5	41.8
10	118.5	103.0	51.5
15	170.9	148.5	74.3
20	215.7	187.5	93.8
25	---	---	116.5
30	---	---	136.0
40	---	---	175.0
50	---	---	217.3

Index No.
30800
REVISED 11/05/21
SHEET 3 OF 3

City of DeLand, Engineering Services
1102 S. Garfield Avenue, DeLand, Florida 32724

DATE: *11/05/2021*
CHECKED BY:
SCALE: *NOT TO SCALE*
DRAWN BY: *ERIC SAMPSON*

TITLE: *SANITARY LIFT STATION*

FILE: *LIFT_STATION_DETAILS_C_D.dwg*

GRAPHIC SCALE

100 0 50 100 200 400

(IN FEET)
1 inch = 100 ft.

Meadowlea Village
A COVE COMMUNITY

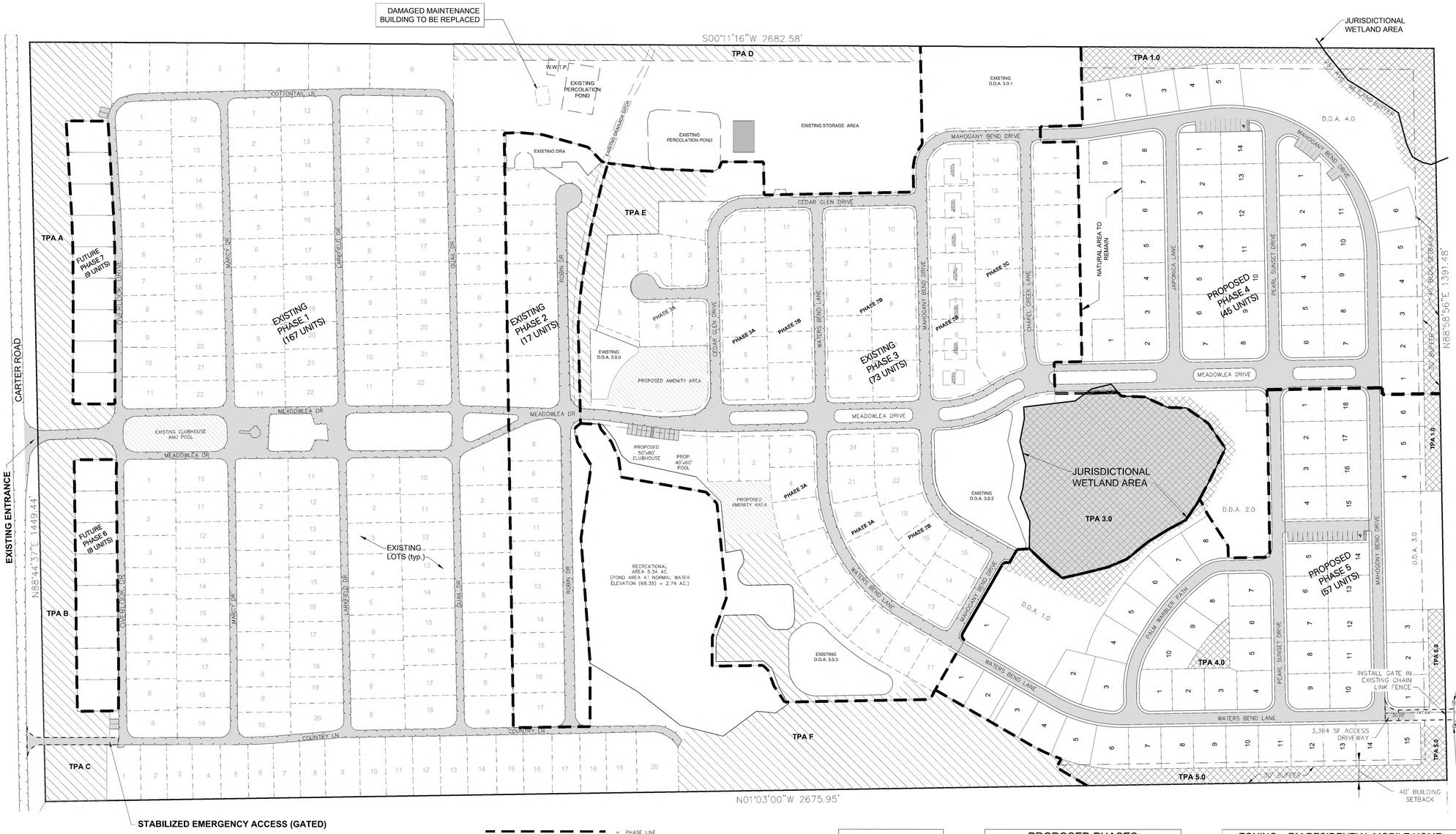

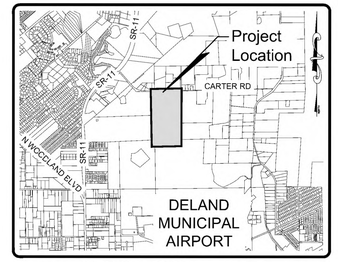

LOCATION MAP
SCALE: 1" = 4000'
DELAND, FLORIDA
SECTION 27, TOWNSHIP 16 SOUTH, RANGE 30 EAST

Site Information:

PROJECT NAME:	MEADOWLEA VILLAGE MASTER PLAN
PARCEL NUMBER:	6027-00-00-0110
PROJECT LOCATION:	1004 OVERLOOK DRIVE DELAND FLORIDA 32724 PH. (904)736-1853
OWNER:	MEADOWLEA VENTURE I LLC
CONTACT:	GARY TIMMONS
TELEPHONE:	(443) 497-7001
ADDRESS:	1901 SE 58TH AVE OCALA FL 34480
PROJECT ENGINEER:	MICHAEL W RADCLIFFE ENGINEERING INC. 2611 SE LAKE WEIR AVE. OCALA, FLORIDA 34471
TELEPHONE:	(352) 629-5500
SITE AREA:	3,812,910 SF (87.53 ACS)
APPROX ACREAGE PER PHASE AS FOLLOWS:	PHASE 1 = 1,682,152 SF (36.62 AC) PHASE 2 = 166,445 SF (3.82 AC) PHASE 3 = 911,014 SF (20.91 AC) PHASE 4 = 489,315 SF (11.23 AC) PHASE 5 = 482,455 SF (11.07 AC) PHASE 6 = 38,352 SF (0.88 AC) PHASE 7 = 43,198 SF (0.99 AC) TOTAL = 3,812,910 SF (87.53 AC)
ZONING:	RM (RESIDENTIAL MOBILE HOME PARK)
LAND USE:	MEDIUM DENSITY RESIDENTIAL

Notes:

1. THIS PROPERTY WAS ANNEXED INTO THE CITY OF DELAND ON 11/2/2020 WITH 257 EXISTING HOME SPACES.
2. MEADOWLEA VILLAGE IS A RENTAL MANUFACTURED HOME COMMUNITY WITH ALL LAND UNDER SINGLE OWNERSHIP.
3. WATER/SEWER FOR EXISTING PHASES 1-3 IS PROVIDED BY MEADOWLEA VILLAGE.

Parking Requirements:

RESIDENTIAL PARKING: 2 SPACES PER UNIT

VISITOR PARKING: 0.25 SPACE PER UNIT

REQUIRED: 102 UNITS = 26 SPACES
REQUIRED 1 HANDICAP SPACE PER 25 REGULAR SPACES

REQUIRED SPACES: 102 x 0.25 = 25.5 ≈ 26 SPACES

PROVIDED SPACES: 36 SPACES

TOTAL: 34 VISITOR SPACES + 2 H.C. SPACES = 36 SPACES

Tree Protection Area (T.P.A):

TPA IN EXISTING PHASES

TPA – A = 12,728 SF (0.29 AC)
TPA – B = 26,500 SF (0.61 AC)
TPA – C = 44,311 SF (1.02 AC)
TPA – D = 26,500 SF (0.61 AC)
TPA – E = 44,311 SF (1.02 AC)
TPA – F = 133,059 SF (3.05 AC)

EXISTING TPA AREA: 328,834 SF (13.45 AC)

EXISTING LAND AREA: 2,841,160 (65.22 AC)

328,834 SF (13.45 AC) / 2,841,160 (65.22 AC) = 11.57%

TPA IN PROPOSED PHASES

TPA – 1.0 = 69,213 SF (1.59 AC)
TPA – 2.0 = NOT USED
TPA – 3.0 = 120,708 SF (2.77 AC)
TPA – 4.0 = 4,517 SF (0.10 AC)
TPA – 5.0 = 31,516 SF (0.72 AC)

PROPOSED TPA AREA: 225,954 SF (5.19 AC)

PROPOSED LAND AREA: 971,388 SF (22.30 AC)

225,954 SF (5.17 AC)/ 971,388 SF (22.30 AC) = 23.26%

TPA OVER TOTAL PROPERTY (87.33 AC)

TOTAL LAND AREA: 3,812,905 SF (87.53 AC)

TOTAL TPA: 554,788 SF (12.74 AC)

554,788 SF (12.74 AC) / 3,812,905 SF (87.53 AC) = 14.55%

ALTHOUGH NOT REQUIRED FOR THE EXISTING PHASES, PROPOSED EXCESS TPA INCREASES THE OVERALL PROPERTY TPA TO 14.53%

= PHASE LINE

= ROAD NETWORK

= TREE PRESERVATION AREA (EXISTING PHASES)

= TREE PRESERVATION AREA (PROPOSED PHASES)

EXISTING PHASES	
PHASE #	YIELD
1	167 LOTS
2	17 LOTS
3	73 LOTS
TOTAL	257 LOTS

PROPOSED PHASES		
PHASE #	YIELD	ROAD LENGTH
4	45 LOTS	2,654 FT (.50 MILES)
5	57 LOTS	2,557 FT (.48 MILES)
6	8 LOTS	-0-
7	9 LOTS	-0-
TOTAL	119	5211 FT (0.98 MILES)

EXISTING + PROPOSED	257+119=376 TOTAL LOTS

ZONING = RM RESIDENTIAL MOBILE HOME	
MINIMUM WIDTH	30'
MINIMUM DEPTH	80'
SEPARATION FROM UNITS	15'
SEPARATION FROM ACCESSORY UNITS	10' FROM MOBILE HOMES
MAXIMUM IMPERVIOUS	50%
PERIMETER SETBACKS FOR MOBILE HOMES	40' FROM PROPERTY LINE
SETBACKS FOR MOBILE HOMES	15' FROM LOT LINES
ACCESSORY STRUCTURE SETBACKS	7.5' FROM LOT LINES

Date:	By:	Revisions:
3/27/23	BIL	REVISED PER OT OF DELAND COMMENTS

Designed: MWR
Drawn: BIL
Checked: MWR
Scale: 1" = 100'
Project: 2022-04
Date: 10-14-2022
File: Meadowlea Village Ph. 4-7.dwg

MICHAEL W. RADCLIFFE ENGINEERING, INC.
2611 S.E. Lake Weir Avenue Ocala, FL 34471 (352) 629-5500 FAX (352) 629-1510
Certificate No. EB-0006198 • Michael W. Radcliffe P.E. #31176 • Christopher A. Gwin P.E. #66568
www.radcliffeengineering.com

COPYRIGHT © 2023 Michael W. Radcliffe Engineering, Inc. All Rights Reserved

Project Name: Meadowlea Village Ph. 4&5
Sheet Name: Master Plan

Sheet No.
M001
of
M001

X:\MWRE Projects\Meadowlea MW\2022-04 Meadowlea Village Ph. 4-7\Design\CADD\Meadowlea Village Ph. 4-7.dwg 3/28/2023 3:33 PM

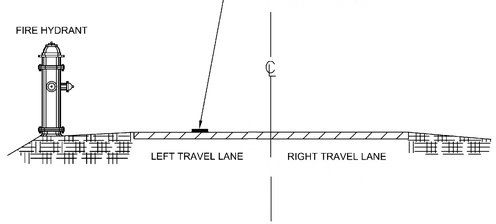

DATE: 11/05/2021 **REFLECTIVE PAVEMENT MARKER FOR FIRE HYDRANT LOCATION** W423

City of DeLand - Standard Details

Approved Ford Valve for Service Lines

1" SERVICE

Pack Joint for Copper or Plastic Tubing (CTS) Inlet by Meter Swivel Nut

Catalog Number	Description: Valve Size	Description: Serv. Line Size	Description: Meter Size	Approx. Wt. Lbs.
B43-211W-NL	5/8"	1/2"	5/8"	1.4
B43-212W-NL	5/8"	1/2"	5/8"x3/4" & 3/4"	1.5
►♦ B43-231W-NL	5/8"	3/4"	5/8"	1.6
►♦ B43-232W-NL	5/8"	3/4"	5/8"x3/4" & 3/4"	1.7
► B43-331W-NL	3/4"	3/4"	5/8"	2.1
►♦ B43-332W-NL	3/4"	3/4"	5/8"x3/4" & 3/4"	2.4
►♦ B43-334W-NL	3/4"	3/4"	1"	2.3
► B43-341W-NL	3/4"	1"	5/8"	2.7
►♦ B43-342W-NL	3/4"	1"	5/8"x3/4" & 3/4"	2.4
►♦ B43-344W-NL	3/4"	1"	1"	2.7
►♦ B43-444W-NL	1"	1"	1"	3.2
B43-454W-NL	1"	1-1/4"	1"	3.4

2" SERVICE

Pack Joint for Copper or Plastic Tubing (CTS) by Female Iron Pipe Thread

Catalog Number	Valve Size	CTS End	FIP End	Approx. Wt. Lbs.
►♦ * B41-333-NL	3/4"	3/4"	3/4"	2.0
►♦ B41-334-NL	3/4"	3/4"	1"	2.1
►♦ B41-343-NL	3/4"	1"	3/4"	2.2
►♦ B41-344-NL	3/4"	1"	1"	2.4
♦ BL41-344-4-875-NL	3/4"	1"	1"	3.1
►♦ * B41-444-NL	1"	1"	1"	2.8
♦ B41-454-NL	1"	1-1/4"	1"	3.2
♦ B41-455-NL	1"	1-1/4"	1-1/4"	3.7
♦ B41-555-NL	1-1/4"	1-1/4"	1-1/4"	5.6
♦ **B41-666-NL	1-1/2"	1-1/2"	1-1/2"	7.0
B41-677-NL	1-1/2"	2"	2"	9.6
♦ **B41-777-NL	2"	2"	2"	11.1

DATE: 11/05/2021 **VALVE FOR WATER AND RECLAIM SERVICE LINE** W424

City of DeLand - Standard Details

Approved Muller Valve for Service Lines

1" SERVICE

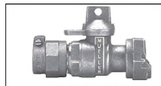

P-24350N

Mueller 300 Ball Straight Meter Valve
Mueller Pack Joint Connection for CTS O.D.* tubing x meter swivel nut**.
Quarter turn check - lock wing. 360° turn option available by adding -3 suffix to catalog number.
Example: P-24350-3

Catalog size	3/4"x5/8" R †	3/4" R †	3/4"	5/8"x3/4"x1"	1" R †	1"
Meter size	5/8"	5/8"x3/4", 3/4"	5/8"x3/4", 3/4"	5/8"x3/4", 3/4"	1"	1"
Tubing size	3/4"	3/4"	3/4"	1"	1"	1"

2" SERVICE

P-25172N

Mueller 300 Ball Curb Valve
Inlet: Mueller Pack Joint Connection for CTS O.D.* tubing
Outlet: F.I.P. thread
Quarter turn check-this valve may be ordered with 360° turn option by adding -3 to end of catalog number (P-25172-3)

3/4"R	3/4"	1"R	1"	1-1/2"	2"

DATE: 11/05/2021 **VALVE FOR WATER AND RECLAIM SERVICE LINE** W425

City of DeLand - Standard Details

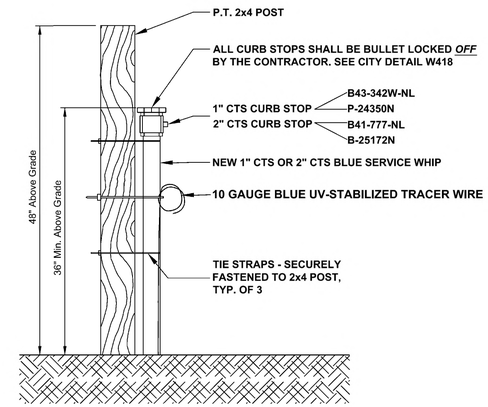

DATE: 11/05/2021 **NEW POTABLE SERVICE WHIP** W426

City of DeLand - Standard Details

CITY OF DELAND, FLORIDA
1102 S. GARFIELD AVENUE, DELAND, FLORIDA 32724

DATE: 11/05/2021
CHECKED BY: NAME
SCALE: NOT TO SCALE
DRAWN BY: ERIC SAMPSON

TITLE: WATER SYSTEM DETAILS (Sheet 3)

FILE: drive letter/details locations

3M LOCATING MARKER BALLS PROGRAMMABLE AND NON-PROGRAMMABLE NOTES:

- Programmable and Non-Programmable Marking Balls will be used on all Sewer, Potable and Reclaim projects
- For information on the Programmable and Non-Programmable Balls that the City requires see spec sheet for details
- Programmable Balls will be placed at all fittings ie. Tees, Couplings, 90, 45, and 22.
- Information will be recorded on a spread sheet. For information that needs to be recorded see spec sheet for an example template for the 3M Marker Balls
- Non-Programmable Marking Balls will used as follow:

- Potable: End of Service Line when buried
- Wastewater: Ball will be placed at the curb line to mark lateral location prior to end of service.
- Reclaim: End of Service Line when buried

- Desired bury depth is 1.5 feet to 3 feet. Five foot is the maximum depth for these devices

1420-LOCATER FOR MARKER BALLS

3M™ Dynatel™ Electronic Marker System (EMS) Marker Locators 1420 series is microprocessor-based systems that quickly and efficiently locate underground markers—years after construction or maintenance. -

The 3M™ Dynatel™ 1420 Marker Locators are designed to be accurate, fast and integrated allowing you to accurately and easily:

• Locate, read and write to 3M iD markers

• Pinpoint the depth and location of all existing models of properly installed underground passive EMS markers

• Conduct direct depth reading of markers

• Locate two different marker frequencies simultaneously

Specifications

2200RB Rechargeable Battery Not Included	2200RB Rechargeable Battery Not Included
Cable/Pipe Locate No	Cable/Pipe Locate No
Carrying Bag Included No	Carrying Bag Included No
Coupler Size No Coupler	Coupler Size No Coupler
Direct Connect Cable N/A	Direct Connect Cable N/A
EMS Caution Tape Finding Capability No	EMS Caution Tape Finding Capability No
Family 1420 Series	Family 1420 Series
Fault Finding Capability No	Fault Finding Capability No
	Locator Type Marker

3M DYNATEL LOCATING AND MARKING ELECTRONIC MARKER SYSTEM:

1423-XR/ID-POTABLE

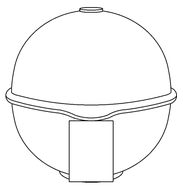

The 3M™ EMS Extended-Range Ball Markers have a self-leveling design providing accurate, horizontal position regardless of how it is placed in the ground, making the job of precisely locating underground facilities easier.

Featured Benefits

- Positive identification of underground water facilities
- iD Marker allows for programming of customer specific information
- Unique self leveling design simplifies installation
- No external power source needed
- Resistant to elements
- 5 foot (1.5 meter) detection distance
- Color conforms to APWA standards

SPECIFICATIONS:

COLOR:	BLUE
DIAMETER (METRIC):	10.4 CM
EMS CAUTION TAPE FINDING CAPABILITY:	N/A
MARKER DEPTH:	5 FEET (1.5M)
MARKER DIMENSION (INCH):	4 INCH DIAMETER
MARKER TYPE:	BALL
PROGRAMMABLE/PASSIVE:	PROGRAMMABLE
RANGE:	0 TO 5 LINEAR FOOT
RoHS 2011/65/EU Compliant:	UNDETERMINED
RoHS EU Comments:	CONTACT 3M FOR INFORMATION
Solution for:	ACCESS NETWORK: FTTH/FTTB/CATV
	ACCESS NETWORK: xDSL, LONG-HAUL/METRO
	LOOP NETWORK: OUTDOOR
	WIRELESS NETWORK: BACKHAUL

1424-XR/ID-SEWER

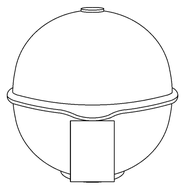

The 3M™ EMS Extended-Range Ball Markers have a self-leveling design providing accurate, horizontal position regardless of how it is placed in the ground, making the job of precisely locating underground facilities easier.

Featured Benefits

- Positive identification of underground wastewater facilities
- iD Marker allows for programming of customer specific information
- Unique self leveling design simplifies installation
- No external power source needed
- Resistant to elements
- 5 foot (1.5 meter) detection distance
- Color conforms to APWA standards

SPECIFICATIONS:

COLOR:	GREEN
DIAMETER (METRIC):	10.4 CM
EMS CAUTION TAPE FINDING CAPABILITY:	N/A
MARKER DEPTH:	5 FEET (1.5M)
MARKER DIMENSION (INCH):	4 INCH DIAMETER
MARKER TYPE:	BALL
NUMBER OF FREQUENCIES:	N/A
PROGRAMMABLE/PASSIVE:	PROGRAMMABLE
RANGE:	0 TO 5 LINEAR FOOT
RoHS 2011/65/EU Compliant:	UNDETERMINED
RoHS EU Comments:	CONTACT 3M FOR INFORMATION
Solution for:	ACCESS NETWORK: FTTH/FTTB/CATV
	ACCESS NETWORK: xDSL, LONG-HAUL/METRO
	LOOP NETWORK: OUTDOOR
	WIRELESS NETWORK: BACKHAUL

1428-XR/ID-RECLAIMED

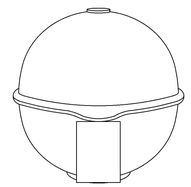

The 3M™ EMS Extended-Range Ball Markers have a self-leveling design providing accurate, horizontal position regardless of how it is placed in the ground, making the job of precisely locating underground facilities easier.

Featured Benefits

- Positive identification of underground general purpose / reclaimed water facilities
- iD Marker allows for programming of customer specific information
- Unique self leveling design simplifies installation
- No external power source needed
- Resistant to elements
- 5 foot (1.5 meter) detection distance
- Color conforms to APWA standards

SPECIFICATIONS:

COLOR:	PURPLE
DIAMETER (METRIC):	10.4 CM
EMS CAUTION TAPE FINDING CAPABILITY:	N/A
MARKER DEPTH:	5 FEET (1.5M)
MARKER DIMENSION (INCH):	4 INCH DIAMETER
MARKER TYPE:	BALL
NUMBER OF FREQUENCIES:	N/A
PROGRAMMABLE/PASSIVE:	PROGRAMMABLE
RANGE:	0 TO 5 LINEAR FOOT
RoHS 2011/65/EU Compliant:	UNDETERMINED
RoHS EU Comments:	CONTACT 3M FOR INFORMATION
Solution for:	ACCESS NETWORK: FTTH/FTTB/CATV
	ACCESS NETWORK: xDSL, LONG-HAUL/METRO
	LOOP NETWORK: OUTDOOR
	WIRELESS NETWORK: BACKHAUL

1403-XR-POTABLE

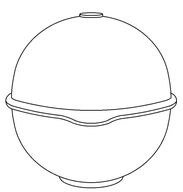

The 3M™ EMS Extended-Range Ball Markers have a self-leveling design providing accurate, horizontal position regardless of how it is placed in the ground, making the job of precisely locating underground facilities easier.

Featured Benefits

- Positive identification of underground water facilities
- Unique self leveling design simplifies installation
- No external power source needed
- Resistant to elements
- 5 foot (1.5 meter) detection distance
- Color conforms to APWA standards

SPECIFICATIONS:

COLOR:	BLUE
DIAMETER (METRIC):	10.4 CM
EMS CAUTION TAPE FINDING CAPABILITY:	N/A
MARKER DEPTH:	5 FEET (1.5M)
MARKER DIMENSION (INCH):	4 INCH DIAMETER
MARKER TYPE:	BALL
NUMBER OF FREQUENCIES:	N/A
PROGRAMMABLE/PASSIVE:	PASSIVE
RANGE:	0 TO 5 LINEAR FOOT
RoHS 2011/65/EU Compliant:	UNDETERMINED
RoHS EU Comments:	CONTACT 3M FOR INFORMATION
Solution for:	ACCESS NETWORK: FTTH/FTTB/CATV
	ACCESS NETWORK: xDSL, LONG-HAUL/METRO
	LOOP NETWORK: OUTDOOR
	WIRELESS NETWORK: BACKHAUL

1404-XR-SEWER

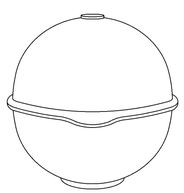

The 3M™ EMS Extended-Range Ball Markers have a self-leveling design providing accurate, horizontal position regardless of how it is placed in the ground, making the job of precisely locating underground facilities easier.

Featured Benefits

- Positive identification of underground wastewater facilities
- Unique self leveling design simplifies installation
- No external power source needed
- Resistant to elements
- 5 foot (1.5 meter) detection distance
- Color conforms to APWA standards

SPECIFICATIONS:

COLOR:	GREEN
DIAMETER (METRIC):	10.4 CM
EMS CAUTION TAPE FINDING CAPABILITY:	N/A
MARKER DEPTH:	5 FEET (1.5M)
MARKER DIMENSION (INCH):	4 INCH DIAMETER
MARKER TYPE:	BALL
NUMBER OF FREQUENCIES:	N/A
PROGRAMMABLE/PASSIVE:	PASSIVE
RANGE:	0 TO 5 LINEAR FOOT
RoHS 2011/65/EU Compliant:	UNDETERMINED
RoHS EU Comments:	CONTACT 3M FOR INFORMATION
Solution for:	ACCESS NETWORK: FTTH/FTTB/CATV
	ACCESS NETWORK: xDSL, LONG-HAUL/METRO
	LOOP NETWORK: OUTDOOR
	WIRELESS NETWORK: BACKHAUL

1408-XR-RECLAIMED

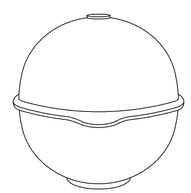

The 3M™ EMS Extended-Range Ball Markers have a self-leveling design providing accurate, horizontal position regardless of how it is placed in the ground, making the job of precisely locating underground facilities easier.

Featured Benefits

- Positive identification of underground general purpose facilities
- Unique self leveling design simplifies installation
- No external power source needed
- Resistant to elements
- 5 foot (1.5 meter) detection distance
- Color conforms to APWA standards

SPECIFICATIONS:

COLOR:	PURPLE
DIAMETER (METRIC):	10.4 CM
EMS CAUTION TAPE FINDING CAPABILITY:	N/A
MARKER DEPTH:	5 FEET (1.5M)
MARKER DIMENSION (INCH):	4 INCH DIAMETER
MARKER TYPE:	BALL
NUMBER OF FREQUENCIES:	N/A
PROGRAMMABLE/PASSIVE:	PASSIVE
RANGE:	0 TO 5 LINEAR FOOT
RoHS 2011/65/EU Compliant:	UNDETERMINED
RoHS EU Comments:	CONTACT 3M FOR INFORMATION
Solution for:	ACCESS NETWORK: FTTH/FTTB/CATV
	ACCESS NETWORK: xDSL, LONG-HAUL/METRO
	LOOP NETWORK: OUTDOOR
	WIRELESS NETWORK: BACKHAUL

CITY OF DELAND, FLORIDA
1102 S. GARFIELD AVENUE, DELAND, FLORIDA 32724

DATE: 11/05/2021
CHECKED BY: ERIC M. SAMPSON
SCALE: NOT TO SCALE
DRAWN BY: MARK LA GRECA

TITLE: UTILITY MARKER BALL LOCATERS

FILE: drive letter/details locations

NOTES:
1. RECLAIM MAINS TO BE ON SOUTH or WEST SIDE OF R.O.W., APPROX. 4 FT. BACK OF CURB UNLESS OTHERWISE AUTHORIZED BY CITY ENGINEER.
2. SERVICE CONNECTIONS TO BE 4 FT. FROM SIDE LOT LINE ON EITHER SIDE OF LOT. THESE SERVICES TO BE CONSISTENT WITHIN THE SUBDIVISION. DRIVEWAYS SHALL NOT BE BUILT OVER METERS.
3. ALL LINES SHALL BE PRESSURE TESTED (TEST FOR TWO HOURS @ 150 P.S.I.) UNDER THE DIRECTION OF THE UTILITIES DEPARTMENT. AFTER SUCCESSFUL COMPLETION OF THE TESTING, THE PRESSURE SHALL REMAIN ON THE SYSTEM AT ALL TIMES.
4. TEN FT. SEPARATION REQUIRED BETWEEN PARALLEL WATER & SANITARY SEWER LINES.
5. SADDLE IS REQUIRED FOR ALL SERVICE CONNECTIONS TO 4" PVC MAINS. SADDLE IS REQUIRED FOR 2" SERVICE CONNECTIONS TO 6" and LARGER PVC MAINS. LARGEST SERVICE CONNECTION TO A 4" MAIN IS MIN. 1-1/2" and LARGEST TO ANY MAIN IS 2".
6. MINIMUM DISTANCE BETWEEN SERVICE TAPS TO BE NOT LESS THAN 36".
7. SINGLE SERVICE TAP SHALL BE 1".
8. DOUBLE SERVICE TAP SHALL BE 1-1/ 2".
9. ALL FITTINGS SHALL BE BRASS ONLY.
10. ALL CORPORATION STOPS, SHALL BE "FORD" OR "MUELLER" ONLY.
11. ALL 3/4", 1", 1-1/2", & 2" W.M., SHALL BE SDR 9, 200 psi, ASTMD 2737, (PURPLE) POLYETHYLENE TUBING.
12. ALL BRASS FITTINGS SHALL BE LEAD FREE.
13. NO GALVANIZED FITTINGS CONNECTED TO BRASS FITTINGS.
14. PLANTINGS AND OBSTRUCTIONS SHOULD BE AVOIDED WITHIN 3 FT. RADIUS FOR SERVICE ACTIVITY.
15. METER BOX SHOULD HAVE A 2'x2'x6' CLEARANCE AROUND IT.

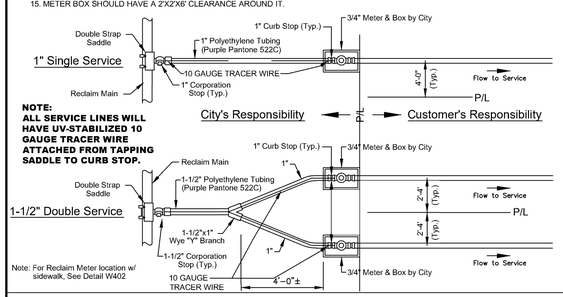

NOTE:
ALL SERVICE LINES WILL HAVE UV-STABILIZED 10 GAUGE TRACER WIRE ATTACHED FROM TAPPING SADDLE TO CURB STOP.

DATE: 11/05/2021 **RECLAIM MAIN SERVICE CONNECTION** R401
City of DeLand - Standard Details

NOTES:
1. RECLAIM MAINS TO BE ON SOUTH or WEST SIDE OF R.O.W., APPROX. 4 FT. BACK OF CURB UNLESS OTHERWISE AUTHORIZED BY CITY ENGINEER.
2. SERVICE CONNECTIONS TO BE 4 FT. FROM SIDE LOT LINE ON EITHER SIDE OF LOT. THESE SERVICES TO BE CONSISTENT WITHIN THE SUBDIVISION. DRIVEWAYS SHALL NOT BE BUILT OVER METERS.
3. ALL LINES SHALL BE PRESSURE TESTED (TEST FOR TWO HOURS @ 150 P.S.I.) UNDER THE DIRECTION OF THE UTILITIES DEPARTMENT. AFTER SUCCESSFUL COMPLETION OF THE TESTING, THE PRESSURE SHALL REMAIN ON THE SYSTEM AT ALL TIMES.
4. TEN FT. SEPARATION REQUIRED BETWEEN PARALLEL WATER & SANITARY SEWER LINES.
5. SADDLE IS REQUIRED FOR ALL SERVICE CONNECTIONS TO 4" PVC MAINS. SADDLE IS REQUIRED FOR 2" SERVICE CONNECTIONS TO 6" and LARGER PVC MAINS. LARGEST SERVICE CONNECTION TO A 4" MAIN IS MIN. 1-1/2" and LARGEST TO ANY MAIN IS 2".
6. MINIMUM DISTANCE BETWEEN SERVICE TAPS TO BE NOT LESS THAN 36".
7. SINGLE SERVICE TAP SHALL BE 1".
8. DOUBLE SERVICE TAP SHALL BE 1-1/ 2".
9. ALL FITTINGS SHALL BE BRASS ONLY.
10. ALL CORPORATION STOPS, SHALL BE "FORD" OR "MUELLER" ONLY.
11. ALL 3/4", 1", 1-1/2", & 2" W.M., SHALL BE SDR 9, 200 psi, ASTMD 2737, (PURPLE) POLYETHYLENE TUBING.
12. ALL BRASS FITTINGS SHALL BE LEAD FREE.
13. NO GALVANIZED FITTINGS CONNECTED TO BRASS FITTINGS
14. METER BOX SHOULD HAVE A 2'x2'x6' CLEARANCE AROUND IT.

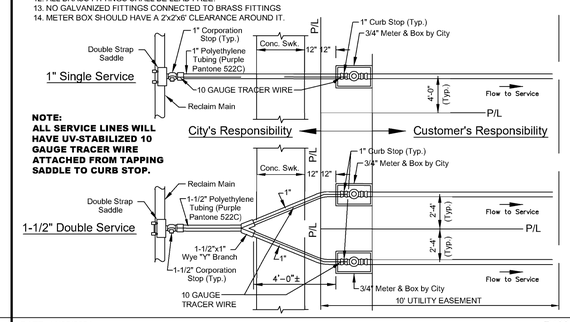

NOTE:
ALL SERVICE LINES WILL HAVE UV-STABILIZED 10 GAUGE TRACER WIRE ATTACHED FROM TAPPING SADDLE TO CURB STOP.

DATE: 11/05/2021 **RECLAIM MAIN SERVICE CONN. WITH SIDEWALK** R402
City of DeLand - Standard Details

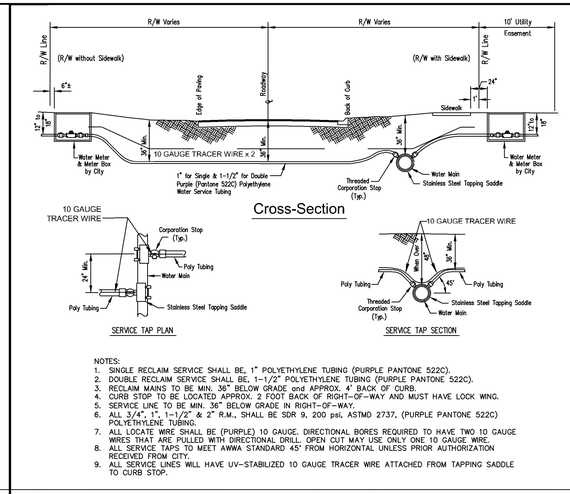

NOTES:
1. SINGLE RECLAIM SERVICE SHALL BE, 1" POLYETHYLENE TUBING (PURPLE PANTONE 522C).
2. DOUBLE RECLAIM SERVICE SHALL BE, 1-1/2" POLYETHYLENE TUBING (PURPLE PANTONE 522C).
3. RECLAIM MAINS TO BE MIN. 36" BELOW GRADE and APPROX. 4' BACK OF CURB.
4. CURB STOP TO BE LOCATED APPROX. 2 FOOT BACK OF RIGHT-OF-WAY AND MUST HAVE LOCK WNG.
5. SERVICE LINE TO BE MIN. 36" BELOW GRADE IN RIGHT-OF-WAY.
6. ALL 3/4", 1", 1-1/2", & 2" R.M., SHALL BE SDR 9, 200 psi, ASTMD 2737, (PURPLE PANTONE 522C) POLYETHYLENE TUBING.
7. ALL LOCATE WIRE SHALL BE (PURPLE) 10 GAUGE. DIRECTIONAL BORES REQUIRED TO HAVE TWO 10 GAUGE WIRES THAT ARE PULLED WITH DIRECTIONAL DRILL. OPEN CUT MAY USE ONLY ONE 10 GAUGE WIRE.
8. ALL SERVICE TAPS TO MEET AWWA STANDARD 45° FROM HORIZONTAL UNLESS PRIOR AUTHORIZATION RECEIVED FROM CITY.
9. ALL SERVICE LINES WILL HAVE UV-STABILIZED 10 GAUGE TRACER WIRE ATTACHED FROM TAPPING SADDLE TO CURB STOP.

DATE: 11/05/2021 **RECLAIM MAIN SERVICE LINES** R403
City of DeLand - Standard Details

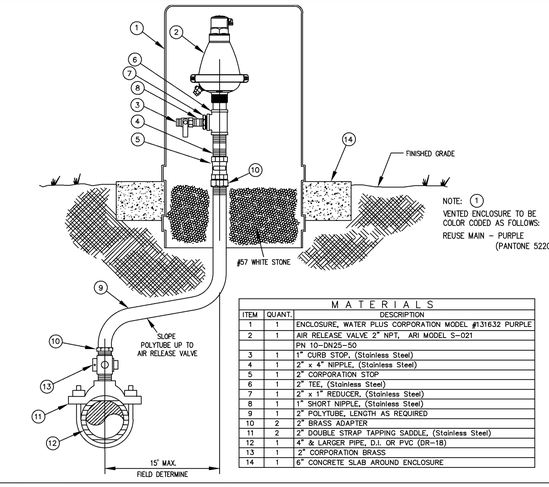

NOTE: (1) VENTED ENCLOSURE TO BE COLOR CODED AS FOLLOWS: REUSE MAIN - PURPLE (PANTONE 522C)

MATERIALS		
ITEM	QUANT.	DESCRIPTION
1	1	ENCLOSURE, WATER PLUS CORPORATION MODEL #131632 PURPLE
2	1	AIR RELEASE VALVE 2" NPT, ARI MODEL S-021 PN 10-DN25-50
3	1	1" CURB STOP, (Stainless Steel)
4	1	2" x 4" NIPPLE, (Stainless Steel)
5	1	2" CORPORATION STOP
6	1	2" TEE, (Stainless Steel)
7	1	2" x 1" REDUCER, (Stainless Steel)
8	1	1" SHORT NIPPLE, (Stainless Steel)
9	1	2" POLYTUBE, LENGTH AS REQUIRED
10	2	2" BRASS ADAPTER
11	2	2" DOUBLE STRAP TAPPING SADDLE, (Stainless Steel)
12	1	4" & LARGER PIPE, D.I. OR PVC (DR-18)
13	1	2" CORPORATION BRASS
14	1	6" CONCRETE SLAB AROUND ENCLOSURE

DATE: 11/05/2021 **OFFSET AIR RELEASE VALVE** R421
City of DeLand - Standard Details

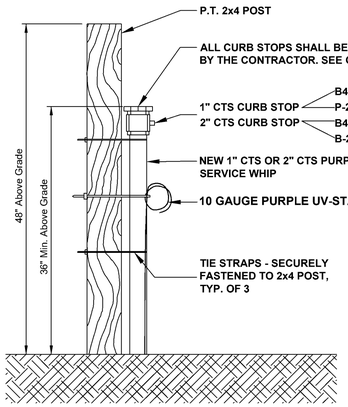

DATE: 11/05/2021 **NEW REUSE SERVICE WHIP** R426
City of DeLand - Standard Details

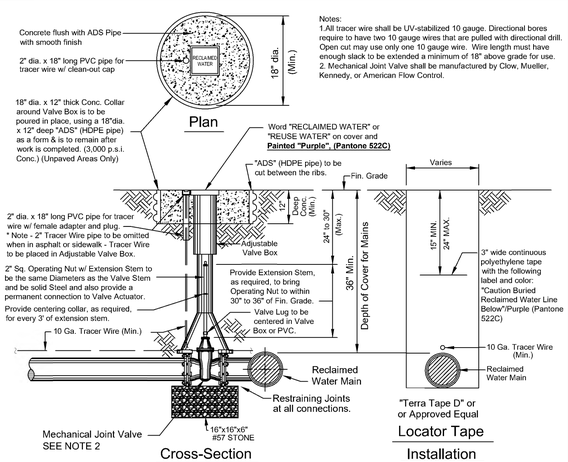

Notes:
1.All tracer wire shall be UV-stabilized 10 gauge. Directional bores require to have two 10 gauge wires that are pulled with directional drill. Open cut may use only one 10 gauge wire. Wire length must have enough slack to be extended a minimum of 18" above grade for use.
2. Mechanical Joint Valve shall be manufactured by Clow, Mueller, Kennedy, or American Flow Control.

DATE: 11/05/2021 **RECLAIMED WATER VALVE SETTING** R450
City of Deland - Standard Details

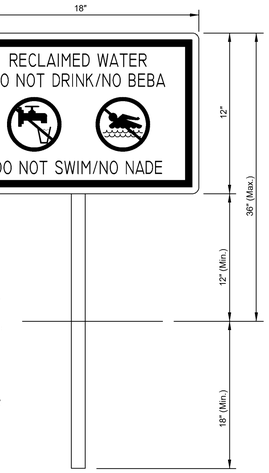

NOTES:
1. Sign background shall be white, letters shall be black (Hellvetica, Swiss 721, corel, or acceptable equal) and border shall be Pantone Purple 522C.
2. Height of sign will depend on location and surrounding landscape plant types. In all cases, the sign shall visable to the public.
3. Engineering grade refective materials shall be used for sign.
4. Sign materials shall be of 0.040 gauge metal.
5. Sign post shall be 2-3/8" OD steel pipe, hot dip galvanized per ASTM A-123, post to be provided by customer.
6. Mounting hardware shall be stainless steel.
7. Signs shall be place by the contractor in accordance with the City approved plans and/ or as approved by the City. (e.g.) Sign should be posted by entrance to subdivision, storage ponds, irrigation pumps, gate entrances to school facility or game fields, and first and ninth Tees at Golf courses.
8. Public notification should occur in HOA document and City Reclaimed Water Brochure with meter application.

DATE: 11/05/2021 **RECLAIMED WATER SIGNAGE** R451
City of DeLand - Standard Details

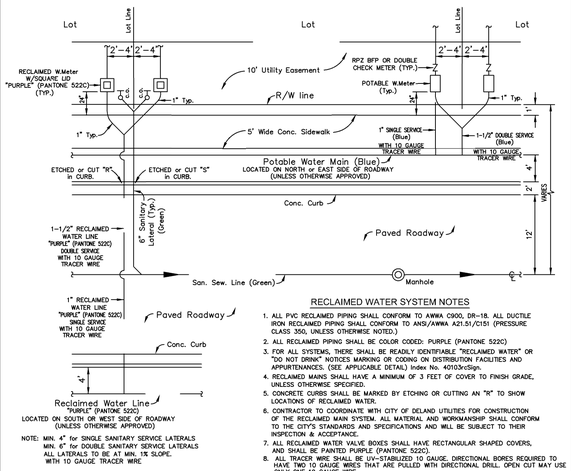

RECLAIMED WATER SYSTEM NOTES
1. ALL PVC RECLAIMED PIPING SHALL CONFORM TO AWWA C900, DR-18. ALL DUCTILE IRON RECLAIMED PIPING SHALL CONFORM TO ANSI/AWWA A21.51/C151 (PRESSURE CLASS 350, UNLESS OTHERWISE NOTED.)
2. ALL RECLAIMED PIPING SHALL BE COLOR CODED: PURPLE (PANTONE 522C)
3. FOR ALL SYSTEMS, THERE SHALL BE READILY IDENTIFIABLE "RECLAIMED WATER" OR "DO NOT DRINK" NOTICES MARKING OR CODING ON DISTRIBUTION FACILITIES AND APPURTENANCES. (SEE APPLICABLE DETAIL) Index No. 40103xcSign.
4. RECLAIMED MAINS SHALL HAVE A MINIMUM OF 3 FEET OF COVER TO FINISH GRADE, UNLESS OTHERWISE SPECIFIED.
5. CONCRETE CURBS SHALL BE MARKED BY ETCHING OR CUTTING AN "R" TO SHOW LOCATIONS OF RECLAIMED WATER.
6. CONTRACTOR TO COORDINATE WITH CITY OF DELAND UTILITIES FOR CONSTRUCTION OF THE RECLAIMED MAIN SYSTEM. ALL MATERIAL AND WORKMANSHIP SHALL CONFORM TO THE CITY'S STANDARDS AND SPECIFICATIONS AND WILL BE SUBJECT TO THEIR INSPECTION & ACCEPTANCE.
7. ALL RECLAIMED WATER VALVE BOXES SHALL HAVE RECTANGULAR SHAPED COVERS, AND SHALL BE PAINTED PURPLE (PANTONE 522C).
8. ALL TRACER WIRE SHALL BE UV-STABILIZED 10 GAUGE. DIRECTIONAL BORES REQUIRED TO HAVE TWO 10 GAUGE WIRES THAT ARE PULLED WITH DIRECTIONAL DRILL. OPEN CUT MAY USE ONLY ONE 10 GAUGE WIRE.

DATE: 11/05/2021 **RECLAIMED WATER SYSTEM LAYOUT** R452
City of DeLand - Standard Details

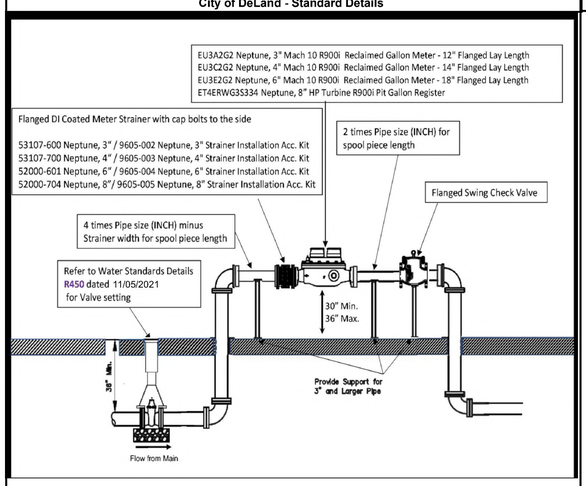

DATE: 11/05/2021 **3" AND ABOVE RECLAIMED METER SET** R453
City of DeLand - Standard Details

1. THE CITY OF DeLand's UTILITIES DEPARTMENT (386-626-7250) SHALL BE GIVEN A MINIMUM OF 48 HOURS ADVANCE NOTICE (NOT INCLUDING HOLIDAYS OR WEEKENDS) PRIOR TO the BEGINNING OF ANY RECLAIMED WATER SYSTEM CONSTRUCTION.
2. DEWATERING SHALL BE PROVIDED TO KEEP GROUNDWATER ELEVATION A MINIMUM OF 6 INCHES BELOW PROPSED RECLAIMED WATER MAIN.
3. ALL RECLAIMED WATER MAINS SHALL BE LAID ON A FIRM FOUNDATION WITH ALL UNSUITABLE MATERIAL (MUCK, ROCK, COQUINA, ETC.) REMOVED AND REPLACED WITH CLEAN GRANULAR MATERIAL.
4. TRENCHES SHALL BE BACKFILLED WITH MATERIAL ACCEPTABLE TO THE CITY WITH A MINIMUM COMPACTION OF 95% IN UNPAVED AREAS AND 98% IN PAVED AREAS IN ACCORDANCE WITH AASHTO T-180.
5. IT SHALL BE THE CONTRACTORS RESPONSIBILITY TO ENSURE THAT TRENCH COMPACTION TESTS ARE PROVIDED AT POINTS 1 FOOT ABOVE THE PIPE AND AT 1 FOOT VERTICAL INTERVALS TO FINISH GRADE, AT A MINIMUM SPACING OF EVERY 300 FEET
6. 3" METALLIZED PIPE LOCATION TAPE SHALL BE LOCATED BETWEEN 15" AND 24" BELOW FINISHED GRADE OR AS SPECIFIED BY MANUFACTURER FOR ALL PVC LINES. MARKER TAPE SHALL BE PROVIDED ON ALL DIPS AS WELL.
7. ALL SINGLE RESIDENTIAL RECLAIMED WATER SERVICES SHALL BE 1" AND DOUBLE RESIDENTIAL SERVICES SHALL BE 1-1/2". SERVICES SHALL BE CTS 3408 HIGH DENSITY POLYETHYLENE TUBING RATED FOR A MINIMUM OF 200 PSI WITH SDR 9 (CTS). THE TUBING SHALL HAVE A VIRGIN HIGH DENSITY POLYETHYLENE CENTER FOR WHICH THE MANUFACTURER SHALL FURNISH A CERTIFICATE OF PURITY. THE TUBING SHALL BE "PURPLE" (PANTONE) IN COLOR AND SHALL HAVE THE WORDS "RECLAIMED WATER" PERMANENTLY PRINTED ON THE OUTSIDE. THE TUBING SHALL HAVE U.V. PROTECTION AND SHALL NOT BE AFFECTED BY DIRECT SUNLIGHT. THE TUBING SHALL COMPLY WITH OR EXCEED THE APPLICABLE STANDARDS OF A.S.D.M. D1248, D3350, D2239, D2737, N.S.F.-14 AND A.W.W.A. C901 AND SHALL COME WITH A LIFETIME WARRANTY. APPROVED SIZES: 1", 1-1/2" AND 2" DIAMETERS. ACCEPTABLE MANUFACTURERS: ENDOT ENDOCORE RWT OR APPROVED EQUAL
8. REFER TO "NEW POTABLE AND REUSE SERVICE WHIP" R426.
9. RECLAIMED WATER VALVES SHALL BE PLACED AT ALL STREET INTERSECTIONS AND AT MAXIMUM SPACING OF 1,000 FEET.
10. AT ALL RECLAIMED WATER MAIN TEES AND CROSSES, VALVES SHALL BE INSTALLED ON ALL LEGS EXCEPT ONE.
11. APPROVED WATER VALVE TYPES MUELLER OR CLOW:
    A. STANDARD GATE VALVES EQUAL TO OR LESS THAN 24" DIAMETER (AWWA C-500) OR RESILIENT SEAT GATE VALVES (AWWA C-509)
    B. TAPPING VALVES WITH MECHANICAL OR STAINLESS STEEL TAPPING SLEEVE.
12. ALL RECLAIMED WATER VALVES SHALL BE ADJUSTED TO FINISH GRADE AND THE CAPS SHALL BE PAINTED PURPLE (PANTONE 522C) TO MAKE THEM PLAINLY DISTINGUISHABLE.
13. AS STANDARD PRACTICE RECLAIMED WATER MAINS SHALL BE INSTALLED 4 FEET OFF THE BACK OF THE CURB ON THE OPPOSITE SIDE OF THE POTABLE WATER LINES OR AS APPROVED BY THE CITY.

DATE: 11/05/2021 **RECLAIMED WATER NOTES - 1 OF 3** R460
City of DeLand - Standard Details

14. ALL RECLAIMED WATER MAINS SHALL HAVE A MINIMUM COVER OF 36 INCHES. IN SPECIAL CASES WHERE IT IS IMPOSSIBLE OR INAPPROPRIATE TO PROVIDE ADEQUATE COVER, DUCTILE IRON PRESSURE CLASS 350 OR CONCRETE ENCASEMENT MAY BE USED AS APPROVED BY THE CITY.
15. THE CONTRACTOR SHALL NOTIFY THE CITY'S DESIGNATED INSPECTOR PRIOR TO ATTEMPTING TO CLEAR ANY RECLAIMED WATER MAIN FOR USE. THE INSPECTOR SHALL COORDINATE WITH CITY PERSONNEL AT THE RECLAIMED WATER PLANT 48 HOURS PRIOR TO BEGINNING OF ANY FULL-DIAMETER FLUSH OF MAINS. THE CONTRACTOR WILL CONDUCT A STANDARD WATER PRESSURE TEST, 150 PSI STATIC PRESSURE FOR A PERIOD OF 2 HOURS PER AWWA POTABLE WATER STANDARDS. THE RECLAIMED LINES WILL THEN BE DISINFECTED WITH CHLORINE, FLUSHED CLEAR AGAIN.
16. THE CONTRACTOR SHALL BE REQUIRED TO PIG ALL RECLAIMED MAINS IN EXCESS OF 4" IN DIAMETER AND PRIMARY DISTRIBUTION MAINS LOCATED ON COLLECTOR AND ARTERIAL ROADWAYS. LAUNCHING AND EXTRACTION POINTS SHALL BE DETERMINED BY THE CONTRACTOR. ALL PIGGING OPERATIONS SHALL BE WITNESSED BY A PUBLIC UTILITIES REPRESENTATIVE OR CITY UTILITY INSPECTOR.
17. RECLAIMED WATER MAINS SHALL BE PVC AWWA CLASS C-900 OR C-905, CL 150 (COLOR: "PURPLE" PANTONE 522C) OR DIP PRESSURE CLASS 350, STANDARD CEMENT LINED UNLESS APPROVED OTHERWISE BY THE CITY.
18. ALL RECLAIMED WATER MAINS SHALL USE A THRUST RESTRAINED JOINT METHOD IN COMPLIANCE WITH THE DUCTILE IRON PIPE RESEARCH ASSOCIATION (DIPRA) GUIDELINES. IN THE EVENT THAT PVC FITTINGS ARE SPECIFIED, THE RESTRAINED JOINT SHALL BE MODIFIED IN ACCORDANCE WITH THE RECOMMENDED ADDITIONAL RESTRAINED LENGTH REQUIRED FOR PIPE WRAPPED WITH POLYETHYLENE. IN NO INSTANCE SHALL THRUST BLOCKS BE PERMITTED.
19. MEGALUGS, BOLTLESS RESTRAINED JOINTS, OR GRIPPER GASKETS SHALL BE USED ON ALL RESTRAINED JOINT INSTALLATIONS. MINIMUM DEPTH OF BURY ON PIPES NOT MEETING REQUIRED COVER REQUIREMENTS SHALL FOLLOW THE MOST RECENT DIPRA THRUST RESTRAINT DESIGN GUIDELINES. SEE DETAILS W408 AND W409.
20. GRIPPER RING GASKETS BY ROMAC MAY BE USED AS APPROPRIATE FOR RESTRAINING PRESSURE PIPE TO FITTINGS, VALVES, ETC.
21. UPON CONSTRUCTION COMPLETION AND ACCEPTANCE OF THE SYSTEM, IT SHALL BE THE DESIGN ENGINEER'S RESPONSIBILITY TO INSURE THAT THE SYSTEM IS PROPERLY CERTIFIED AND ACCEPTED BY THE CITY OF DeLand UTILITIES AND "AS-BUILTS" ARE PROVIDED TO THE CITY, PRIOR TO ANY USE OF THIS SYSTEM.
22. ALL RECLAIMED WATER MAINS AND SERVICE LINES SHALL BE READILY DISTINGUISHABLE BY THEIR "PURPLE" (PANTONE 522C) COLOR OR TAPE MARKINGS. DUCTILE IRON PIPE SHALL BE WRAPPED WITH PURPLE PANTONE 522C POLYETHYLENE.
23. ALL RECLAIMED WATER SERVICES SHALL BE MARKED ALONG THE OUTSIDE EDGE OF CURB WITH AN "R". VALVES AND BLOW-OFFS FOR RECLAIMED WATER MAINS SHALL BE MARKED BY AN "X" SET INTO THE CURB.
24. RECLAIM WATER SERVICES SHALL BE NORMALLY DOUBLE 1-1/2" SERVICES LOCATED AT SIDE LOT LINES ALTERNATING WITH POTABLE WATER SERVICE LOCATIONS. IN INSTANCES WHERE RECLAIMED WATER SERVICES NEED TO BE OFFSET, DUE TO SEWER LATERAL CONNECTION. 1" SINGLE SERVICES SHALL BE SPECIFIED, THESE SERVICES MAY BE OFFSET FROM THE LOT LINE A MAXIMUM DISTANCE OF 4.0'.

DATE: 11/05/2021 **RECLAIMED WATER NOTES - 2 OF 3** R461
City of DeLand - Standard Details

25. MAXIMUM OBTAINABLE SEPARATION OF PUBLIC RECLAIMED WATER MAINS, STORMWATER MAINS, AND SANITARY SEWER MAINS SHALL BE MAINTAINED. A MINIMUM HORIZONTAL SEPARATION OF THREE (3) FEET (OUTSIDE TO OUTSIDE), TEN (10) FEET PREFERRED. A MINIMUM VERTICAL SEPARATION OF SIX (6) INCHES, IF WATER MAIN IS ABOVE STORM, SAN. SEW. & RECLAIMED MAINS. A MINIMUM VERTICAL SEPARATION OF EIGHTEEN (18) INCHES, IF WATER MAIN IS BELOW STORM, SAN. SEW. & RECLAIMED MAINS. (Ref Detail W420)
26. NO RECLAIMED WATER HOSE BIBBS ARE PERMITTED.
27. A 75-FOOT SETBACK DISTANCE SHALL BE PROVIDED FROM PUBLIC ACCESS REUSE WETTED AREAS TO ANY PUBLIC AND ANY PRIVATE POTABLE WATER SUPPLY WELLS.
28. LOW TRAJECTORY NOZZLES ARE REQUIRED WITHIN 100 FEET OF PUBLIC EATING, DRINKING OR BATHING FACILITIES.
29. ALL TAPPING OF MAINS SHALL BE PERFORMED BY THE CONTRACTOR AND WITNESSED BY THE CITY INSPECTOR. SCHEDULING OF THESE CONNECTIONS SHALL REQUIRED A MINIMUM 48 HOUR NOTIFICATION (MEASURED ON NORMAL WORK DAYS) DIRECTED TO THE CITY'S DESIGNATED SITE INSPECTOR WHO SHALL COORDINATE THE WORK DIRECTLY WITH THE CITY'S UTILITIES DEPARTMENT. SUBSEQUENTLY, THE CONNECTION SHALL BE SCHEDULED TO COMMENCE BETWEEN 7:00 A.M. AND NOON ON THE APPROPRIATE DAY, UNLESS ALTERNATE TIMES HAVE BEEN APPROVED BY THE CITY.
30. WITH RESPECT TO TIE-IN CONNECTIONS, THE CITY RESERVES THE RIGHT TO REQUIRE CONNECTIONS TO BE PERFORMED DURING PERIODS OF LOW FLOW IN ORDER TO MINIMIZE SERVICE DISRUPTION TO EXISTING CUSTOMERS.
31. ALL WORK PERFORMED UPON RECLAIMED WATER FACILITIES OWNED OR PROPOSED TO BE OWNED BY THE CITY, SHALL BE CONSTRUCTED BY AN UNDERGROUND UTILITY OR GENERAL CONTRACTOR LICENSED IN THE STATE OF FLORIDA AND REGISTERED WITH THE CITY.
32. FOR CONSTRUCTION PURPOSES, THE PLANS SHALL PROVIDE DIMENSION OF THE PROPOSED LOCATIONS OF ALL RECLAIMED WATER MAINS MEASURED FROM THE BACK OF CURB (OR EDGE OF PAVEMENT IF NO CURB EXISTS).
33. ALL HDPE PIPE RECLAIMED WATER MAINS SHALL BE SDR 11 UNLESS SPECIFICALLY NOTED OTHERWISE. THE HDPE PIPE SHALL BE SIZED TO MATCH THE EXTERNAL DIAMETER OF THE PVC OR DIP TO WHICH IT IS ATTACHED.
34. ALL P.V.C. PIPE SHALL BE STORED IN SUCH A WAY AS TO PREVENT WARPING, DEFLECTION, OR ANY DEFORMATION.
35. RECLAIMED WATER HYDRANTS ARE NOT ALLOWED BY THE CITY.
36. NO USED, RE-USED, RUSTED, SECOND HAND, OR ANY MATERIAL THAT IS NOT "NEW" SHALL BE USED IN ANY UTILITY IMPROVEMENT PROJECTS WITHIN THE CITIES SERVICE AREA.
37. LARGE RECLAIMED WATER METERS GREATER THAN 2" TAKES A MINIMUM OF 6 WEEKS FOR DELIVERY. IN ADDITION, ALL METERS AND VAULTS GREATER THAN 2" SHALL BE INSTALLED BY THE OWNER/ DEVELOPER OR CONTRACTOR. THE FEE COLLECTED BY THE CITY IS FOR MATERIALS ONLY. ALL METERS, 2" AND LESS, SHALL BE INSTALLED BY THE CITY, AFTER ALL FEES HAVE BEEN PAID.
38. TYPICALLY, THE CITY PREFERS DOUBLE SERVICE INSTALLATIONS WHEREVER FEASIBLE. WHEN DESIGN CONFLICTS EXIST, SINGLE SERVICES MAY BE ALLOWED. THIS MAY APPLY AT STORMWATER INLETS, FIRE HYDRANTS, FPL TRANSFORMERS, ETC. AND OTHER LOCATIONS DEEMED APPROPRIATE BY THE CITY.
39. ALL RECLAIMED WATER VALVE BOXES SHALL HAVE RECTANGULAR SHAPED COVERS, AND SHALL BE PAINTED "PURPLE" (PANTONE 522C) AND LABELED REUSE OR RECLAIM.

NOTE: DIP = DUCTILE IRON PIPE

DATE: 11/05/2021 **RECLAIMED WATER NOTES - 3 OF 3** R462
City of DeLand - Standard Details

CITY OF DELAND, FLORIDA
1102 S. GARFIELD AVENUE, DELAND, FLORIDA 32724

DATE: 11/05/2021
CHECKED BY: NAME
SCALE: NOT TO SCALE
DRAWN BY: ERIC SAMPSON

TITLE: RECLAIMED WATER DETAILS
FILE: drive letter/details locations

Notes:
1.All tracer wire shall be 10 gauge. Directional bores require to have two 10 gauge wires that are pulled with directional drill. Open cut may use only one 10 gauge wire. Wire length must have enough slack to be extended a minimum of 18" above grade for use.
2. Mechanical Joint Valve shall be manufactured by Clow, Mueller, Kennedy, or American Flow Control.

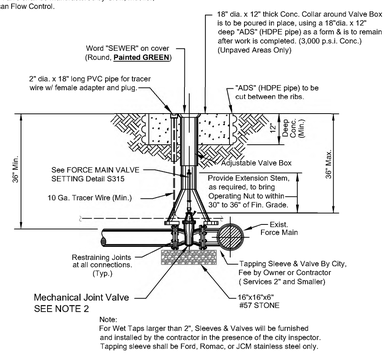

Note:
For Wet Taps larger than 2", Sleeves & Valves will be furnished and installed by the contractor in the presence of the city inspector. Tapping sleeve shall be Ford, Romac, or JCM stainless steel only.

DATE: 11/05/2021 | **FORCE MAIN TAPPING SLEEVE & VALVE** | **S407**

City of DeLand - Standard Details

CITY OF DELAND, FLORIDA
1102 S. GARFIELD AVENUE, DELAND, FLORIDA 32724

DATE: *11/05/2021*
SCALE: *NOT TO SCALE*
CHECKED BY: *NAME*
DRAWN BY: *ERIC SAMPSON*

TITLE: *SANITARY DETAILS*
FILE: *drive letter/details locations*

PAGE 1 OF 5

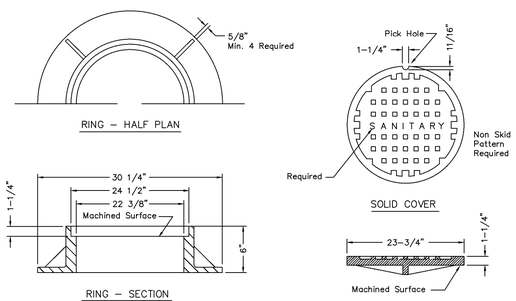

NOTE:
Manufacturers model of storm ring and cover to be approved by City Engineer.

DATE: 11/05/2021 **SANITARY MANHOLE COVER - USF 170-E** **S301**

City of DeLand - Standard Details

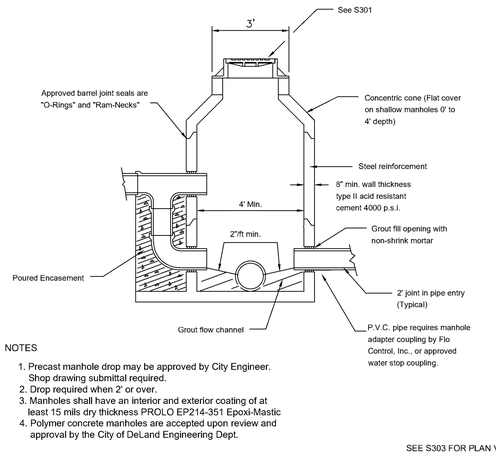

NOTES

1. Precast manhole drop may be approved by City Engineer. Shop drawing submittal required.
2. Drop required when 2' or over.
3. Manholes shall have an interior and exterior coating of at least 15 mils dry thickness PROLO EP214-351 Epoxi-Mastic
4. Polymer concrete manholes are accepted upon review and approval by the City of DeLand Engineering Dept.

SEE S303 FOR PLAN VIEW

DATE: 11/05/2021 **SANITARY MANHOLE** **S302**

City of DeLand - Standard Details

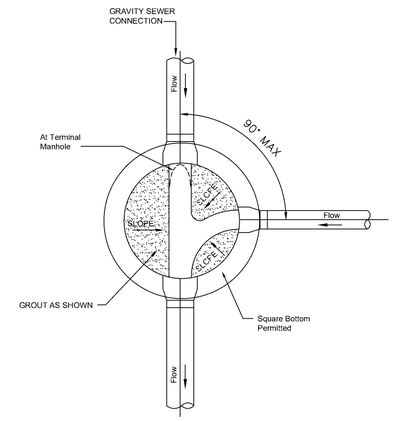

SEE S302 FOR SECTION

DATE: 11/05/2021 **SANITARY MANHOLE** **S303**

City of DeLand - Standard Details

NOTES
1. PRECAST MANHOLE DROP MAY BE APPROVED BY CITY ENGINEER. SHOP DRAWING SUBMITTAL REQUIRED.
2. DROP REQUIRED WHEN 2' OR OVER.
3. MANHOLES SHALL HAVE AN INTERIOR AND EXTERIOR COATING OF AT LEAST 15 MILS DRY THICKNESS PROLO EP214–351 EPOXI–MASTIC OR KOPPERS BITUMASTIC BLACK SOLUTION 300M.

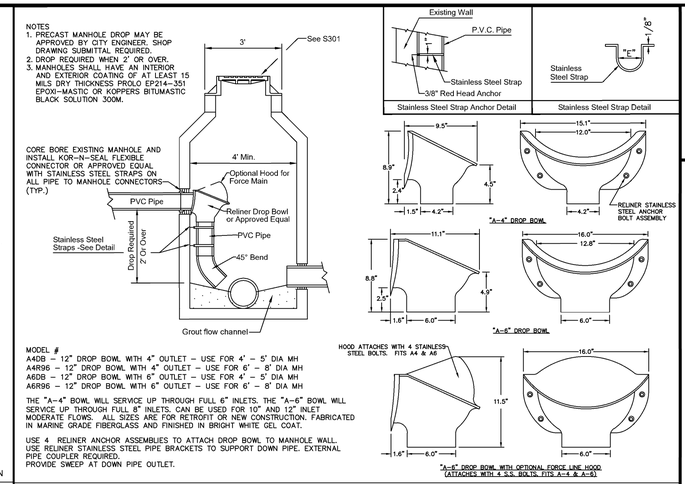

MODEL #
A4DB – 12" DROP BOWL WITH 4" OUTLET – USE FOR 4' – 5' DIA MH
A4R96 – 12" DROP BOWL WITH 4" OUTLET – USE FOR 6' – 8' DIA MH
A6DB – 12" DROP BOWL WITH 6" OUTLET – USE FOR 4' – 5' DIA MH
A6R96 – 12" DROP BOWL WITH 6" OUTLET – USE FOR 6' – 8' DIA MH

THE "A–4" BOWL WILL SERVICE UP THROUGH FULL 6" INLETS. THE "A–6" BOWL WILL SERVICE UP THROUGH FULL 8" INLETS. CAN BE USED FOR 10" AND 12" INLET MODERATE FLOWS. ALL SIZES ARE FOR RETROFIT OR NEW CONSTRUCTION. FABRICATED IN MARINE GRADE FIBERGLASS AND FINISHED IN BRIGHT WHITE GEL COAT.

USE 4 RELINER ANCHOR ASSEMBLIES TO ATTACH DROP BOWL TO MANHOLE WALL. USE RELINER STAINLESS STEEL PIPE BRACKETS TO SUPPORT DOWN PIPE. EXTERNAL PIPE COUPLER REQUIRED.
PROVIDE SWEEP AT DOWN PIPE OUTLET.

DATE: 11/05/2021 **SANITARY MANHOLE - INSIDE DROP FOR GRAVITY & FORCEMAIN** **S304**

City of DeLand - Standard Details

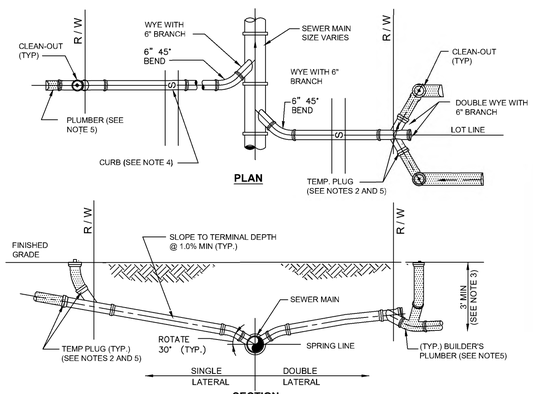

NOTES:
1. INVERT OF SERVICE LATERAL MUST BE ABOVE SPRING LINE.
2. SERVICE LATERAL SHALL BE CAPPED BY THE CONTRACTOR.
3. WYE SHALL BE NO SHALLOWER THAN 3-FEET AND NO DEEPER THAN 5-FEET.
4. CUT OR CAST "S" IN CONCRETE CURB AT SEWER LATERAL LOCATION AND PAINT GREEN.
5. PLUMBER SHALL REMOVE PLUG, INSTALL CLEAN-OUT, AND CONNECT SERVICE LATERAL TO HOUSE.

DATE: 11/05/2021 **SANITARY SERVICE LATERIALS** **S305**

City of DeLand - Standard Details

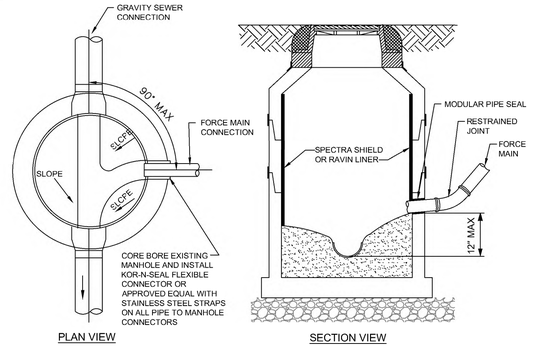

NOTES:
1. FORCE MAIN ORIENTED TO FACILITATE FLOW AND SHALL ENTER MANHOLE WITHIN 1' ABOVE INVERT OF THE EFFLUENT PIPE.
2. BENCH AS REQUIRED FOR NEW FORCE MAIN.
3. MANHOLE RECEIVING FORCE MAIN AND NEXT MANHOLE SHALL BE LINED. EXISTING MANHOLES RECEIVING FORCE MAIN SHALL BE LINED WITH SPECTRA SHIELD OR RAVIN.
4. CONTRACTOR TO COORDINATE THE PRESENCE OF UTILITIES INSPECTOR DURING CORING AND CONNECTIONS TO EXISTING MANHOLES.

DATE: 11/05/2021 **FORCE MAIN TO GRAVITY SEWER CONNECTION** **S306**

City of DeLand - Standard Details

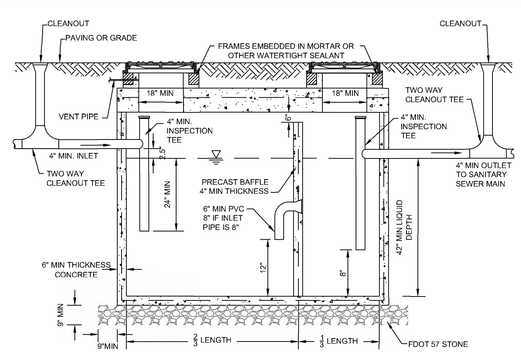

NOTES:
1. SPECIFIC DESIGN DETAILS MUST IN ALL ASPECTS MEET APPLICABLE FLORIDA PLUMBING AND ADMINISTRATIVE CODE.
2. SIZE GREASE INTERCEPTOR - MINIMUM SIZE 750 GAL; MAXIMUM SIZE 1250 GAL.
3. INTERCEPTORS SHALL BE WATER AND GAS TIGHT.
4. ALL FIXTURES LOCATED IN FOOD AND BEVERAGE PREPARATION AREAS SHALL BE ROUTED THOUGH GREASE INTERCEPTOR. RESTROOM WASTE SHALL NOT BE ROUTED THROUGH INTERCEPTOR.
5. BAFFLE REQUIRED; ALTERNATIVE DESIGNS ARE ACCEPTABLE THAT MEET FLORIDA PLUMBING AND ADMINISTRATIVE CODE.
6. LOADS:COVER TO MEET H-20 TRUCK WHEELS WITH 30% IMPACT PER AASHTO. TRAFFIC BEARING FRAME AND COVER TO MEET FDOT STANDARDS AND SHALL BE IMPRINTED WITH THE WORDS "GREASE TRAP".

DATE: 11/05/2021 **GREASE TRAP** **S307**

City of DeLand - Standard Details

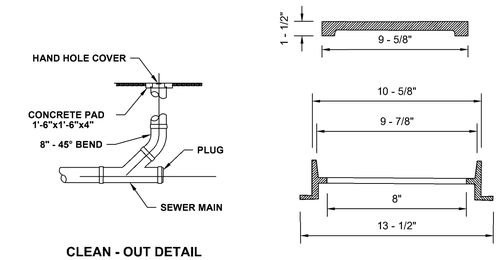

NOTE: HAND HOLE COVER TO BE U.S. FOUNDRY 7621 OR EQUAL

DATE: 11/05/2021 **CLEAN - OUT** **S308**

City of DeLand - Standard Details

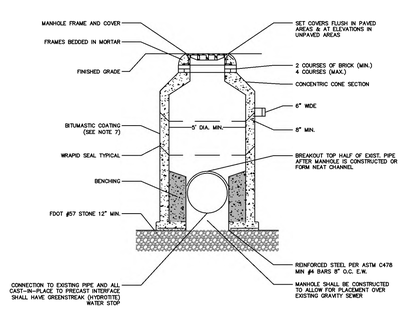

NOTES:

1. DOGHOUSE OPENING MAY ONLY BE USED WHEN PLACING A NEW MANHOLE OVER AN EXISTING LINE; OTHERWISE, THE OPENING MUST BE CAST. SIZE, LOCATION AND ANGLE OF ENTRY SHOULD BE AS REQUIRED BY THE PLANS.
2. OPENINGS IN PRE–CAST UNITS ARE TO BE 4" MINIMUM TO 8" MAXIMUM LARGER THAN THE OUTSIDE DIAMETER OF THE PROPOSED PIPE.
3. MANHOLE COVERS TYPICAL FOR ALL FRAME TYPES.
4. WRAPID SEAL MUST BE USED ON ALL JOINTS, CASTINGS AND RISER RINGS: ON ALL JOINTS ON ROUND AIR RELEASE AND ROUND MANHOLE STRUCTURES.
5. WRAPID SEAL MUST BE USED IN ACCORDANCE WITH MANUFACTURER'S RECOMMENDATIONS.
6. MAX. MANHOLE DEPTH SHALL BE 15' TO LOWEST PIPE INVERT.
7. MANHOLES SHALL HAVE AN INTERIOR AND EXTERIOR COATING OF AT LEAST 15 MILS DRY THICKNESS PROLO EP214–351 EPOXI–MASTIC OR KOPPERS BITUMASTIC BLACK SOLUTION 300M.
8. POLYMER CONCRETE MANHOLES ARE ACCEPTED UPON REVIEW AND APPROVAL BY THE CITY OF DELAND ENGINEERING DEPT.

DATE: 11/05/2021 **DOGHOUSE MANHOLE** **S309**

City of DeLand - Standard Details

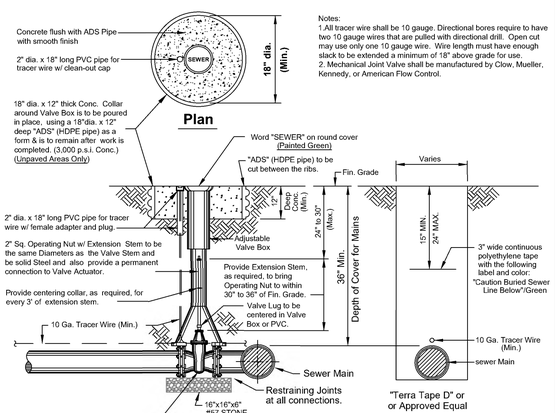

Notes:
1.All tracer wire shall be 10 gauge. Directional bores require to have two 10 gauge wires that are pulled with directional drill. Open cut may use only one 10 gauge wire. Wire length must have enough slack to be extended a minimum of 18" above grade for use.
2. Mechanical Joint Valve shall be manufactured by Clow, Mueller, Kennedy, or American Flow Control.

DATE: 11/05/2021 **FORCE MAIN VALVE SETTING** **S315**

City of Deland - Standard Details

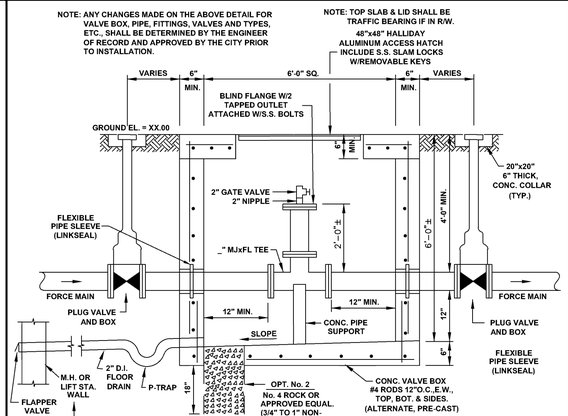

DATE: 11/05/2021 **POLY PIG LAUNCHER** **S310**

City of DeLand - Standard Details

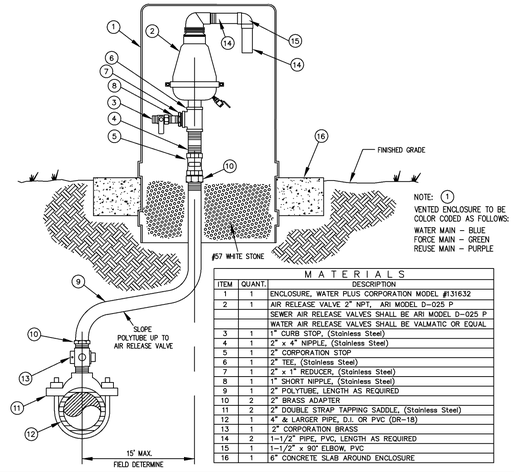

MATERIALS		
ITEM	QUANT.	DESCRIPTION
1	1	ENCLOSURE, WATER PLUS CORPORATION MODEL #131632
2	1	AIR RELEASE VALVE 2" NPT, ARI MODEL D–025 P
		SEWER AIR RELEASE VALVES SHALL BE ARI MODEL D–025 P
		WATER AIR RELEASE VALVES SHALL BE VALMATIC OR EQUAL
3	1	1" CURB STOP, (Stainless Steel)
4	1	2" x 4" NIPPLE, (Stainless Steel)
5	1	2" CORPORATION STOP
6	1	2" TEE, (Stainless Steel)
7	1	2" x 1" REDUCER, (Stainless Steel)
8	1	1" SHORT NIPPLE, (Stainless Steel)
9	1	2" POLYTUBE, LENGTH AS REQUIRED
10	2	2" BRASS ADAPTER
11	2	2" DOUBLE STRAP TAPPING SADDLE, (Stainless Steel)
12	1	4" & LARGER PIPE, D.I. OR PVC (DR–18)
13	1	2" CORPORATION BRASS
14	2	1–1/2" PIPE, PVC, LENGTH AS REQUIRED
15	1	1–1/2" x 90° ELBOW, PVC
16	1	6" CONCRETE SLAB AROUND ENCLOSURE

DATE: 11/05/2021 **OFFSET AIR RELEASE VALVE** **S311**

City of DeLand - Standard Details

CITY OF DELAND, FLORIDA
1102 S. GARFIELD AVENUE, DELAND, FLORIDA 32724

DATE: 11/05/2021
CHECKED BY: NAME
SCALE: NOT TO SCALE
DRAWN BY: ERIC SAMPSON

TITLE: SANITARY DETAILS

FILE: drive letter/details locations

SPARE PARTS

1. VACUUM PUMP AND FLOAT CHECK VALVE
2. CHECK VALVE
3. CW OR CCW IMPELLER
4. PARKER SOLENOID VALVE (25 PSI)
5. MECHANICAL SEAL
6. SONIC START VACUUM DOME HOUSING
7. SONIC START REPLACEMENT PRIME SENSOR

MOTORS:
THE PUMP MOTORS SHALL BE VERTICAL, SOLID SHAFT, NEMA P-BASE, SQUIRREL-CAGE INDUCTION TYPE, SUITABLE FOR 3 PHASE, 60 CYCLE, 480 VOLT ELECTRIC CURRENT. THEY SHALL HAVE CLASS F INSULATION. INSULATION TEMPERATURE SHALL, HOWEVER, BE LIMITED TO CLASS B. THE MOTORS SHALL HAVE NORMAL STARTING TORQUE AND LOW-STARTING CURRENT, AS SPECIFIED BY NEWMAN DESIGN B CHARACTERISTICS. THEY SHALL BE OPEN DRIP-PROOF DESIGN WITH FORCED AIR CIRCULATION BY INTEGRAL FAN. OPENINGS FOR VENTILATION SHALL BE UNIFORMLY SPACED AROUND THE FRAME. LEADS SHALL BE TERMINATED IN CAST CONNECTION BOX AND SHALL BE CLEARLY IDENTIFIED.
THE MOTORS SHALL HAVE 1.15 SERVICE FACTOR. THE SERVICE FACTOR SHALL BE RESERVED THE OWNER'S PROTECTION. THE MOTORS SHALL NOT BE OVERLOADED BEYOND THEIR NAMEPLATE RATING, AT THE DESIGN CONDITIONS, NOR AT ANY HEAD IN THE OPERATING RANGE AS SPECIFIED UNDER OPERATING CONDITIONS.
THE MOTOR-PUMP SHAFT SHALL BE CENTERED, IN RELATION TO THE MOTOR BASE, WITHIN 0.005".
THE SHAFT RUBOUT SHALL NOT EXCEED 0.003".
THE MOTORS SHAFT SHALL BE EQUAL OR EXCEED THE DIAMETER SPECIFIED UNDER MAIN PUMPS AT ALL POINTS FROM IMMEDIATELY BELOW THE TOP BEARING TO THE TOP OF THE IMPELLER HUB.
A BEARING CAP SHALL BE PROVIDED TO HOLD THE BOTTOM MOTOR BEARING IN A FIXED POSITION. BEARING HOUSINGS SHALL BE PROVIDED WITH FITTING FOR LUBRICATION AS WELL AS PURGING OLD LUBRICANT. THE MOTORS SHALL BE FITTED WITH HEAVY LIFTING EYES OR LUGS, EACH CAPABLE OF SUPPORTING THE ENTIRE WEIGHT OF THE PUMP AND MOTOR.

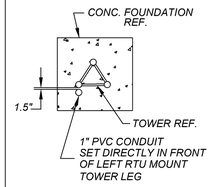

CONDUIT DETAIL

SECTION "A-A"

N.T.S.

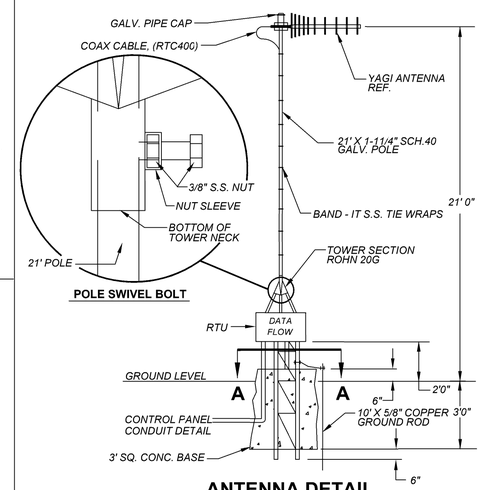

ANTENNA DETAIL

N.T.S.

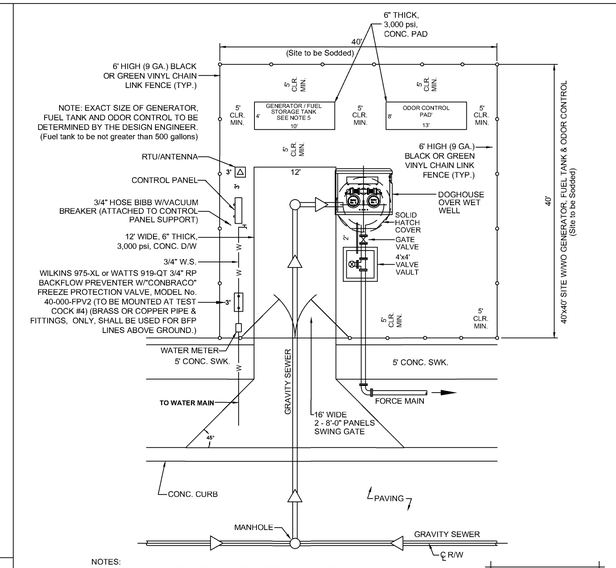

NOTES:
1. MINIMUM 20'-0" ACCESS DRIVEWAY FROM EDGE OF PAVEMENT TO THE GATE SHALL BE PROVIDED ON NON-RESIDENTIAL ROADS.
2. MINIMUM DISTANCE BETWEEN FENCE AND ALL INSTALLED EQUIPMENT SHALL BE 5 FEET UNLESS OTHERWISE NOTED.
3. ALL WORK SHALL BE PER CITY STANDARDS & SPECIFICATIONS.
4. BRASS OR COPPER PIPE & FITTINGS, ONLY, SHALL BE USED FOR HOSE BIBBS AND ALL WATER LINES ABOVE GROUND.
5. CITY ONLY ACCEPTS BLUE STAR, FLORIDA DETROIT DIESEL, OR CATERPILLAR GENERATORS.
6. POLYMER CONCRETE WET WELLS ARE ACCEPTED UPON REVIEW AND APPROVAL BY THE CITY OF DELAND ENGINEERING DEPT.

NOTE: 40'x40' UTILITY EASEMENT SITE TO BE DEDICATED TO CITY OF DELAND

(also a ingress-engress easement shall be provided to Site if required)

LIFT STATION SITE PLAN

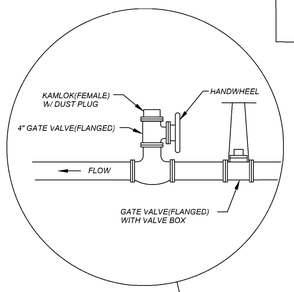

SEE PAGE 2 & 3 FOR CONTROL PANEL RACK AND SET-UP

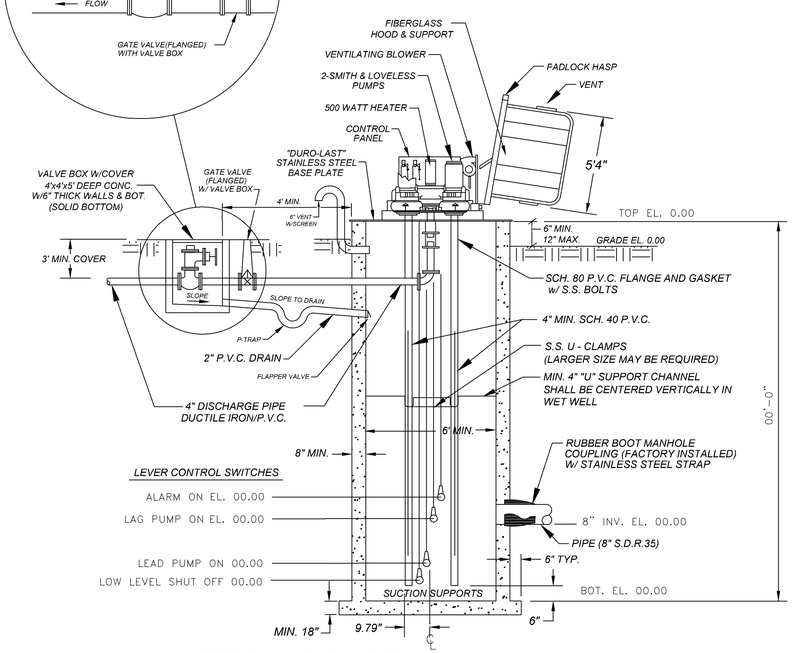

SECTIONAL ELEVATION

N.T.S.

1. ALL MAJOR COMMERCIAL OR RESIDENTIAL PROJECTS MUST PROVIDE AN ON- SITE GENERATOR OR CONTRIBUTE TO THE GENERATOR FUND.
2. GENERATOR MAKE SHALL BE A BLUE STAR, FLORIDA DETROIT DIESEL, OR CATERPILLAR.
3. DIESEL FUEL TANK WITH THREE DAY RUN TIME MIN. (500 Gallon Maximum Storage)
4. AUTOMATIC TRANSFER SWITCH SHALL BE REQUIRED.
5. GENERATOR SHALL BE CONNECTED TO THE REMOTE TELEMETRY UNIT FOR MONITORING.
6. NEW SUBDIVISIONS OF 80 HOMES OR MORE WILL BE REQUIRED TO PROVIDE A UNIT W/ GENERATOR. (LESS THAN 80 HOMES WILL PAY A PRO RATA SHARE $450 PER UNIT)
7. POLYMER CONCRETE WET WELLS ARE ACCEPTED UPON REVIEW AND APPROVAL BY THE CITY OF DELAND ENGINEERING DEPT.

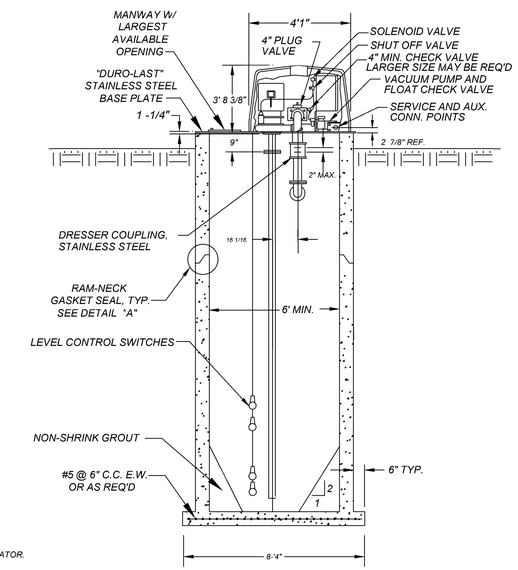

CROSS SECTION

N.T.S.

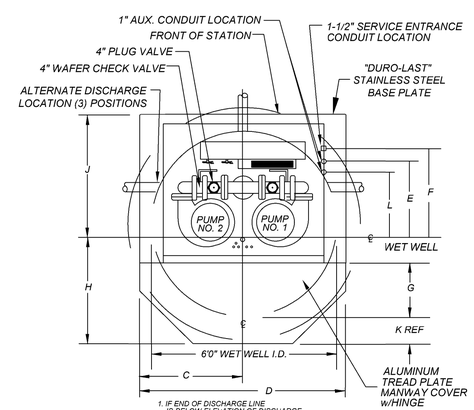

1. IF END OF DISCHARGE LINE IS BELOW ELEVATION OF DISCHARGE LINE @ POINT OF LEAVING WET WELL A PRIMING LOCK LOOP MAY BE REQ.'D.. (CONSULT FACTORY)
2. IF DISCHARGE LINE IS LESS THAN 200' IN LENGTH AN ADDITIONAL CHECK VALVE OR PRIMING LOCK LOOP MAY BE REQ. D. (CONSULT FACTORY)
3. PROVIDE 60" SLOPE IN WET WELL, AS REQ'D.
4. VOLUME IN GALLONS BETWEEN L.L. ON AND L.L. OFF SHOULD BE EQUAL OR GREATER THAN THE PUMPING RATE IN G.P.M.
5. MAXIMUM CAPACITY - 400 G.P.M.

PLAN VIEW

N.T.S.

MACH. CHAMBER (SHOWN LESS HOOD)

GENERAL SITE PLAN NOTES:

1. BACKFLOW PREVENTER SHALL BE, WILKINS 3/4" 975-XL RP or WATTS 3/4" 919-QT RP , W/ "CONBRACO" FREEZE PROTECTION VALVE, MODEL No. 40-000-FPV2, TO BE MOUNTED AT TEST COCK #4.
2. ALL 3/4" HOSE BIBBS SHALL ALSO HAVE A VACUUM BREAKER.
3. LIFT STATION SITE SHALL BE SODDED.
4. PRIOR TO ACCEPTANCE OF THIS LIFT STATION, CITY STAFF WILL OBSERVE THAT THIS STATION WILL PUMP DOWN TO THE CITY'S SPECIFIED CUT-OFF LEVEL UNDER THE CONDITIONS OF A FULL DISCHARGE PRESSURE SEWER, BEING PRESSURIZED W/ ALL OTHER PUMP STATIONS OPERATING, IF THERE EXISTS A MANIFOLD CONDITION. THE DEVELOPER WILL SUPPLY LABOR AND MATERIALS FOR THIS DEMONSTRATION.
5. DO NOT PLACE TRANSFORMERS OR OTHER APPURTENANCES WITHIN THE DESIGNATED EASEMENT THAT WILL IMPEDE MAINTENANCE ACTIVITIES OF THIS STATION.
6. ORIENTATE THE MANWAY TOWARD THE STREET SIDE FOR EASY ACCESS BY OPERATING & MAINTENANCE PERSONNEL.
7. PROVIDE ADEQUATE PAVING (CONC. OR ASPHALT) 12' WIDE DRIVE FROM STREET TO PUMP STATION FOR SAFE ACCESS OF EMERGENCY GENERATOR, SEWER CLEANER, AND OTHER MAINTENANCE VEHICLES.
8. FENCE WITH 6' HIGH COMMERCIAL GRADE CYCLONE FENCE, USING TWO 8 FOOT GATES . FENCE SHOULD BE LOCATED IN SUCH A WAY AS NOT TO INTERFERE WITH ANY FANEL DOORS OR HATCH OPENINGS, AND GATE POSITIONED TO ALLOW EASY ACCESS TO WET WELL. (BLACK OR GREEN VINYL COATED), (REFER TO SITE PLAN)
9. A 40' x 40' TRACT SHALL BE DEDICATED TO THE CITY OF DELAND FOR THE LIFT STATION SITE.
10. PROVIDE "DURO-LAST" STAINLESS STEEL BASE PLATE ON LIFT STATION.
11. BRASS OR COPPER PIPE & FITTINGS, ONLY, SHALL BE USED FOR BFP & HOSE BIBBS AND LINES ABOVE GROUND.
12. ALL SEWER AIR RELEASE VALVES SHALL BE 2" A.R.I. MODEL D-025TPO2.
13. MIN. 2'x'2' AROUND AND 6' CLEARANCE ABOVE METER

CONTROLS:
THE CONTROL EQUIPMENT SHALL BE MOUNTED IN A NEMA TYPE 1 STEEL ENCLOSURE WITH A REMOVABLE ACCESS COVER. THE CIRCUIT BREAKERS, STARTER RESET BUTTONS, AND CONTROL SWITCHES SHALL BE OPERABLE WITHOUT REMOVING THE ACCESS COVER, FOR DEADFRONT OPERATION.
A GFCI TYPE CONVENIENCE OUTLET SHALL BE PROVIDED ON THE SIDE OF THE CABINET FOR OPERATION OF 120 VOLT AC DEVICES. THERMAL MAGNETIC AIR CIRCUIT BREAKERS SHALL BE PROVIDED FOR BRANCH DISCONNECT SERVICE AND SHORT CIRCUIT PROTECTION OF ALL MOTOR CONTROL AND AUXILIARY CIRCUITS.
MAGNETIC ACROSS-THE-LINE STARTERS WITH UNDER-VOLTAGE RELEASE AND OVERLOAD COILS FOR EACH PHASE SHALL BE PROVIDED FOR EACH PUMP MOTOR TO GIVE POSITIVE PROTECTION. EACH SINGLE-PHASE AUXILIARY MOTOR SHALL BE EQUIPPED WITH AN OVER-CURRENT PROTECTION DEVICE IN ADDITION TO THE BRANCH CIRCUIT BREAKER, OR SHALL BE IMPEDANCE PROTECTED. ALL SWITCHES SHALL BE LABELED AND A CODED WIRING DIAGRAM SHALL BE PROVIDED.
TO CONTROL THE OPERATION OF THE PUMPS WITH VARIATIONS OF LIQUID LEVEL IN THE WET WELL, A MINIMUM OF FOUR (4) DISPLACEMENT SWITCHES SHALL BE PROVIDED. A 30' CORD SHALL BE PROVIDED WITH EACH SWITCH. THE CORD SHALL HAVE A CORROSION-RESISTANT VINYL JACKET AND BE MULTI-STRANDED IN ORDER TO PREVENT FATIGUE.
AN AUTOMATIC ALTERNATOR WITH MANUAL SWITCH SHALL BE PROVIDED TO CHANGE THE SEQUENCE OF OPERATION OF THE PUMPS EVERY EIGHT HOURS. ALTERNATING THE PUMPS AT LESS THAN EIGHT HOUR INTERVALS WILL NOT BE ACCEPTABLE. PROVISIONS SHALL ALSO BE MADE FOR THE PUMPS TO OPERATE IN PARALLEL SHOULD THE LEVEL IN THE WET WELL CONTINUE TO RISE ABOVE THE STARTING LEVEL FOR THE LAG PUMP.

WET WELL DIA.	DIM "A"	DIM "B"	DIM "C"	DIM "D"	DIM "E"	DIM "F"	DIM "G"	DIM "H"	DIM "J"	DIM "K"	DIM "L"
6'- 0"	2"	1'-1 13/16"	3'-4"	6'-8"	2'-1 3/8"	2'-5 7/8"	1'-8"	3'-10"	3'-5 1/2"	10"	1'-8 7/8"

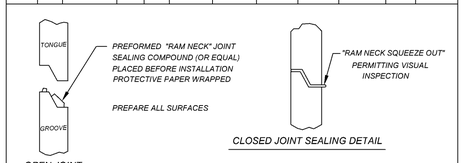

DETAIL "A"

N.T.S.

Note:
Air release valves shall be provided at all high points on force main.

Wet Well (Anti-Floation)

Displacement = XX,XXX lbs. Up
Structure = XX,XXX lbs. Down

Valve Vault (Anti-Floation)

Displacement = X,XXX lbs. Up
Structure = X,XXX lbs. Down

Index No.
30800

REVISED 5/31/07
REVISED 8/6/08
REVISED 10/12/09
REVISED 4/8/10
REVISED 8/1/13
REVISED 9/2/14
REVISED 5/15/17
REVISED 7/24/18
REVISED 11/05/21

SHEET 1 OF 3

City of DeLand, Engineering Services
1102 S. Garfield Avenue, DeLand, Florida 32724

SCALE: NOT TO SCALE
DATE: 11/05/2021
DRAWN BY: ERIC SAMPSON
CHECKED BY:

TITLE: SANITARY LIFT STATION

FILE: LIFTSTATION.dwg

DETAIL "A"

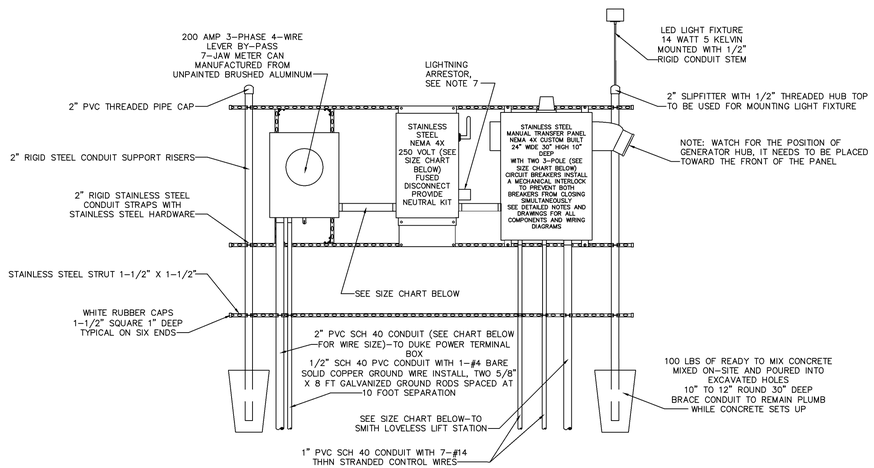

240 VOLT POWER RACK WITHOUT GENERATOR

DETAIL "B"

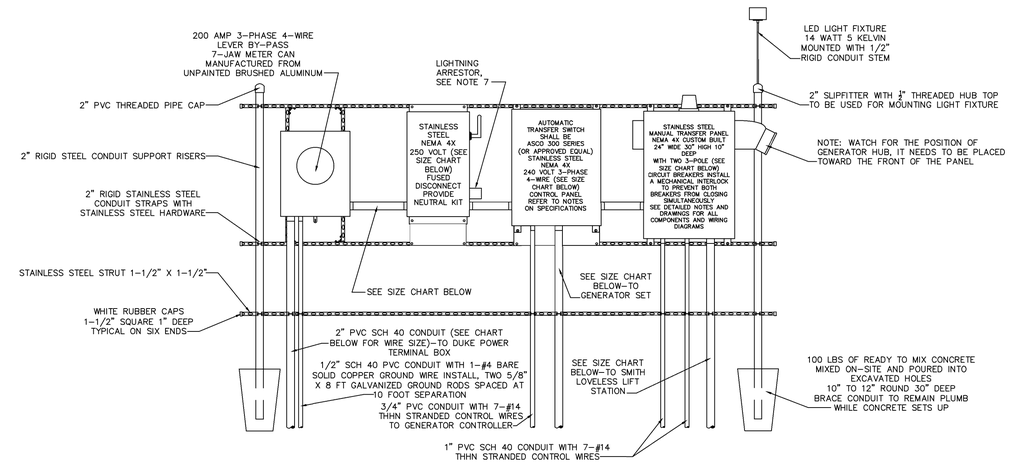

240 VOLT POWER RACK WITH GENERATOR AUTOMATIC TRANSFER SWITCH

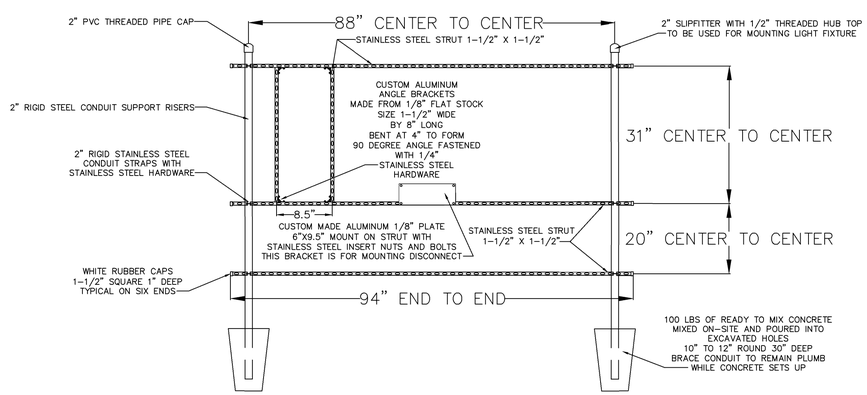

RACK FRAMING DETAILS
240 VOLT WITHOUT AUTOMATIC TRANSFER SWITCH

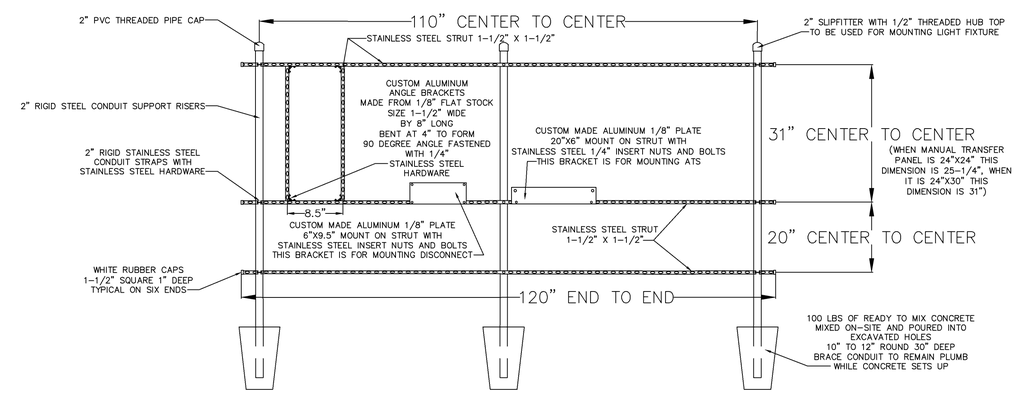

RACK FRAMING DETAILS
240 VOLT WITH AUTOMATIC TRANSFER SWITCH

CONTROL GENERATOR RECEPTACLE PANEL

1. ENCLOSURE : NEMA 4X STAINLESS, 304 GRADE, 14 GAUGE, GASKETED, #4 BRUSHED FINISH, U.L. AND CSA APPROVED, HASP AND STAPLE FOR PADLOCKING, INSIDE PRINT POCKET, STAINLESS STEEL HINGE. MIN. SIZE 24"x 24"x 8" FOR UP TO 15 H.P.
2. MAIN BREAKER : SQUARE D HEAVY DUTY SIZED PROPERLY FOR FULL LOAD OF STATION PLUS 25%.
3. EMERGENCY BKR.: SQUARE D HEAVY DUTY SIZED PROPERLY FOR FULL LOAD OF STATION PLUS 25%.
4. MECH. INTERLOCK: ALL ALUMINUM AND STAINLESS STEEL W/POSITIVE MEANS OF LOCKING OFF BREAKER NOT IN USE. THE BREAKERS WILL PROTRUDE THROUGH INNER DOOR.
5. RECEPTACLE: RUSSELL STOLL JRS1044FR (230 VOLT ONLY), MELTRIC PART #37-98047 (480 VOLT ONLY)
6. ANGLE ADAPTER: RUSSELL STOLL JAAB-10, 20 DEG. ADAPTER
7. LIGHTNING ARRESTOR: HEAVY DUTY, SQUARE D P/N SDSA3650
8. PHASE MONITOR: DIVERSIFIED P/N SLA-230-ASA, 8 PIN WITH N.O. AND N.C. CONTACTS WIRE TO TERMINAL FOR RTU EQUIPMENT.
9. HIGH WATER ALARM: RED, LEXAN, W/NO EXTERNAL SCREWS.
10. HWA RELAY: SQUARE D OR OMRON, 8 PIN DOUBLE POLE, DOUBLE THROW WIRED TO RTU TERMINAL.
11. ALARM HORN: RED, WHEELOCK P/N 31T-115 MOUNTED TO RED WEATHER PROOF CAST BOX ON EXTERIOR OF ENCLOSURE.
12. ALARM RELAY: SQUARE D OR OMRON, 8 PIN DOUBLE POLE, DOUBLE THROW WIRED TO RTU TERMINAL.
13. ALARM RESET/SIL: SQUARE D, WEATHER PROOF MOUNTED ON EXTERIOR OF ENCLOSURE.
14. ENCL. BACKPLATE: ALUMINUM, 12 GAUGE
15. TERMINAL STRIP: BUCHANON P/N 0625
16. GROUND LUG: BUCHANON P/N 824
17. NEUTRAL LUG: BUCHANON P/N 824
18. MAIN LOAD LUG: SQUARE D P/N U3
19. LABELS: ALL BREAKERS AND SWITCHES TO BE IDENTIFIED BY PERMANENTLY ATTACHED LABEL TO PANEL DOOR INTERIOR
20. MOUNTING SCREWS: STAINLESS STEEL 304
21. SCHEMATIC DWG.: PROTECTED BY PLASTIC COATING AND ATTACHED TO PANEL DOOR INTERIOR.
22. MANUFACTURER: STACON, ECS OR CITY OF DELAND APPROVAL.
23. R.T.U.: (DATA FLOW MELBOURNE FLA. (R.T.U. 204) OR EQUAL TO BE INSTALLED BY CITY- DEVELOPER TO BEAR ALL COSTS.
24. PROVIDE SPARE PARTS - SEE SPARE PARTS LIST
25. WET WELL TO BE COATED INSIDE AND OUT WITH MIN. 24 MILS OF COAL/TAR EPOXY
26. EQUIVALENT PRODUCTS CAN ONLY BE APPROVED UPON RECEIPT OF WRITTEN AUTHORIZATION FROM THE CITY OF DELAND.

SIZE CHART

STEP #1: DETERMINE LIFT STATION SIZE & SPECIFICATIONS FROM THE UTILITY CONTRACTOR OR CITY OF DELAND ENGINEERING DEPT.

STEP #2: MAKE NOTE OF THE FOLLOWING: THE VOLTAGE FOR THE STATION, THE NUMBER OF PUMPS (2 OR 3) & THE HORSEPOWER OF PUMPS.

STEP #3: REFER TO THE ELECTRICAL SERVICE DATA CHARTS FOR THE STANDARD 2 PUMP OR 3 PUMP STATION (FOUND ON SHEET 3 OF 3).

STEP #4: USE THE VOLTAGE COLUMN AND THE HORSEPOWER ROW TO FIND THE TOTAL STATION FULL LOAD AMPS.

STEP #5: UPON DETERMINING THE FULL LOAD AMPS OF THE STATION, THE SERVICE ENTRANCE SIZE SHALL NOT BE SMALLER THAN 100 AMPS. STATIONS THAT REQUIRE A SERVICE SIZE LARGER THAN 100 AMPS SHALL BE SIZED CLOSEST TO THE STANDARD SIZES LISTED BELOW.

SERVICE SIZE	CONDUIT SIZE	WIRE SIZE	BREAKER OR FUSE RATING
100 AMP	1-1/2"	#3 THHN CU	100 AMP
125 AMP	1-1/2"	#2 THHN CU	125 AMP
150 AMP	2"	#1 THHN CU	150 AMP
200 AMP	2"	3/0 THHN CU	200 AMP
225 AMP	2-1/2"	4/0 THHN CU	225 AMP

Index No.
30800
REVISED 11/05/21
SHEET 2 OF 3

City of DeLand, Engineering Services
1102 S. Garfield Avenue, DeLand, Florida 32724

DATE: *11/05/2021*
CHECKED BY:
SCALE: *NOT TO SCALE*
DRAWN BY: *ERIC SAMPSON*

TITLE: *SANITARY LIFT STATION*

FILE: *LIFT_STATION_DETAILS_A_B.dwg*

DETAIL "C"

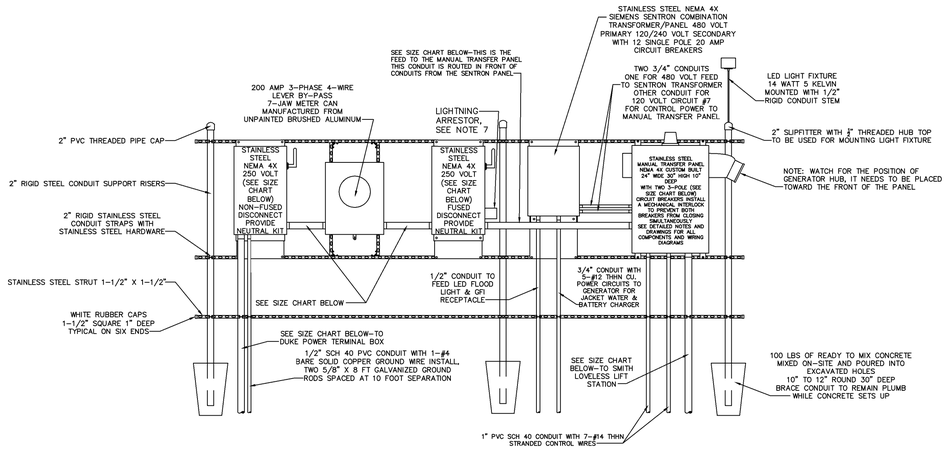

480 VOLT POWER RACK WITHOUT GENERATOR AUTOMATIC TRANSFER SWITCH

DETAIL "D"

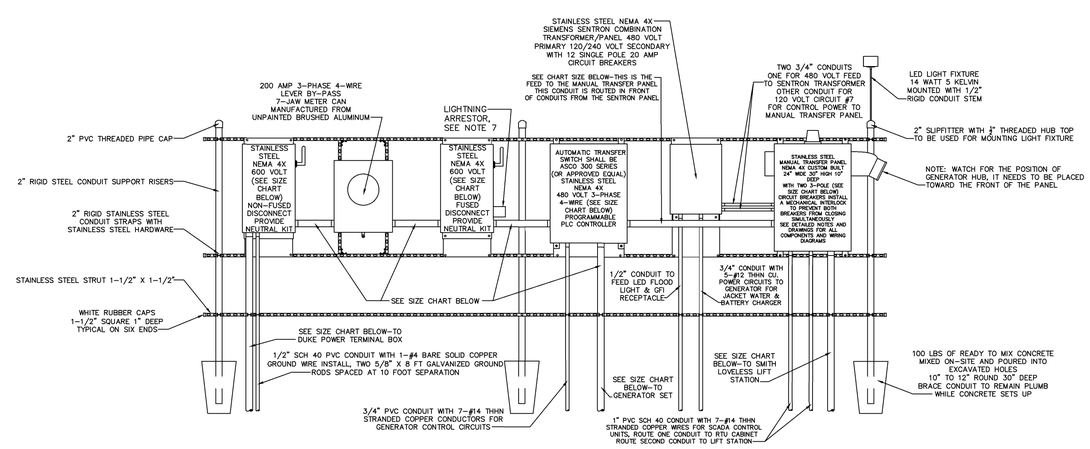

480 VOLT POWER RACK WITH GENERATOR WITH AUTOMATIC TRANSFER SWITCH

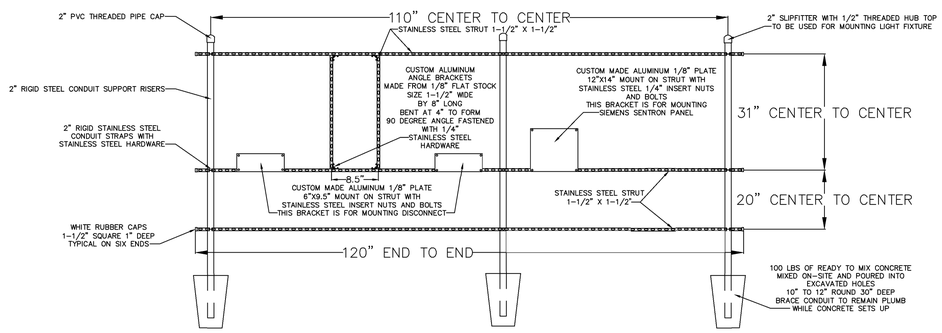

RACK FRAMING DETAILS 480 VOLT WITHOUT AUTOMATIC TRANSFER SWITCH

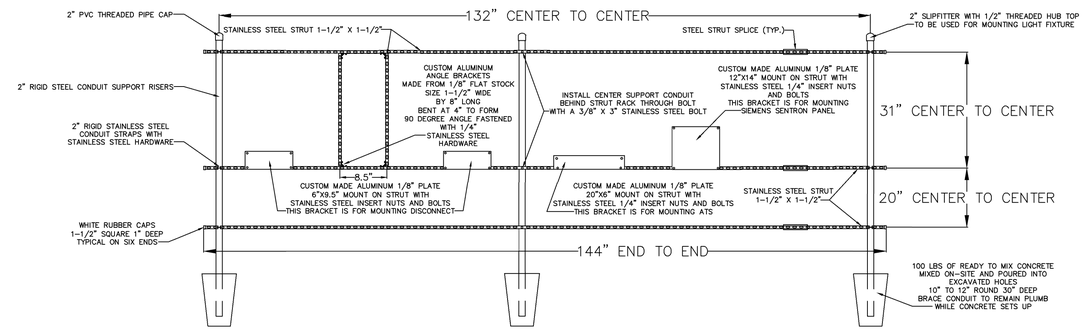

RACK FRAMING DETAILS 480 VOLT WITH AUTOMATIC TRANSFER SWITCH

CONTROL GENERATOR RECEPTACLE PANEL

1. ENCLOSURE ; NEMA 4X STAINLESS, 304 GRADE, 14 GAUGE, GASKETED, #4 BRUSHED FINISH, U.L. AND CSA APPROVED, HASP AND STAPLE FOR PADLOCKING, INSIDE PRINT POCKET, STAINLESS STEEL HINGE. MIN. SIZE 24" x 24"x 8" FOR UP TO 15 H.P.
2. MAIN BREAKER : SQUARE D HEAVY DUTY SIZED PROPERLY FOR FULL LOAD OF STATION PLUS 25%.
3. EMERGENCY BKR.: SQUARE D HEAVY DUTY SIZED PROPERLY FOR FULL LOAD OF STATION PLUS 25%.
4. MECH. INTERLOCK: ALL ALUMINUM AND STAINLESS STEEL W/POSITIVE MEANS OF LOCKING OFF BREAKER NOT IN USE. THE BREAKERS WILL PROTRUDE THROUGH INNER DOOR.
5. RECEPTACLE: RUSSELL STOLL JRS1044FR (230 VOLT ONLY), MELTRIC PART #37-98047 (480 VOLT ONLY)
6. ANGLE ADAPTER: RUSSELL STOLL JAAB-10, 20 DEG. ADAPTER
7. LIGHTNING ARRESTOR: HEAVY DUTY, SQUARE D F/N SDASA3650, OR INTERMATIC AG503C 600V.
8. PHASE MONITOR: DIVERSIFIED F/N SLA-230-ASA, 8 PIN WITH N.O. AND N.C. CONTACTS WIRE TO TERMINAL FOR RTU EQUIPMENT.
9. HIGH WATER ALARM: RED, LEXAN, W-/NO EXTERNAL SCREWS.
10. HWA RELAY: SQUARE D OR OMRON, 8 PIN DOUBLE POLE, DOUBLE THROW WIRED TO RTU TERMINAL.
11. ALARM HORN: RED, WHEELOCK F/N 31T-115 MOUNTED TO RED WEATHER PROOF CAST BOX ON EXTERIOR OF ENCLOSURE.
12. ALARM RELAY: SQUARE D OR OMRON, 8 PIN DOUBLE POLE, DOUBLE THROW WIRED TO RTU TERMINAL.
13. ALARM RESET/SIL: SQUARE D, WEATHER PROOF MOUNTED ON EXTERIOR OF ENCLOSURE.
14. ENCL. BACKPLATE: ALUMINUM, 12 GAUGE
15. TERMINAL STRIP: BUCHANON F/N 0625
16. GROUND LUG: BUCHANON F/N 824
17. NEUTRAL LUG: BUCHANON F/N 824
18. MAIN LOAD LUG: SQUARE D F/N U3
19. LABELS: ALL BREAKERS AND SWITCHES TO BE IDENTIFIED BY PERMANENTLY ATTACHED LABEL TO PANEL DOOR INTERIOR
20. MOUNTING SCREWS: STAINLESS STEEL 304
21. SCHEMATIC DWG.: PROTECTED BY PLASTIC COATING AND ATTACHED TO PANEL DOOR INTERIOR.
22. MANUFACTURER: STACON, ECS OR CITY OF DELAND APPROVAL.
23. R.T.U.: (DATA FLOW MELBOURNE F.L.A. (R.T.U. 204) OR EQUAL TO BE INSTALLED BY CITY- DEVELOPER TO BEAR ALL COSTS.
24. PROVIDE SFARE PARTS - SEE SPARE PARTS LIST
25. WET WELL TO BE COATED INSIDE AND OUT WITH MIN. 24 MILS OF COAL/TAR EPOXY
26. EQUIVALENT PRODUCTS CAN ONLY BE APPROVED UPON RECEIPT OF WRITTEN AUTHORIZATION FROM THE CITY OF DELAND.

ELECTRICAL SERVICE DATA STANDARD 2-PUMP WET WELL MOUNTED PUMP STATION

MAIN PUMP MOTOR SIZE	TOTAL STATION FULL LOAD AMPS		
RATED HP EACH	208 VOLT	230 VOLT	460 VOLT
1	17.6	15.3	7.6
1–1/2	21.8	18.9	9.5
2	25.9	22.5	11.3
3	33.1	28.8	14.5
5	47.7	41.4	20.7
7–1/2	65.3	56.7	28.4
10	80.8	70.2	35.1
15	117.0	101.7	50.9
20	148.1	128.7	64.4
25	190.44	160.2	80.1
30	215.3	187.2	93.6
40	---	---	120.6
50	---	---	150.0

ELECTRICAL SERVICE DATA STANDARD 3-PUMP WET WELL MOUNTED PUMP STATION

MAIN PUMP MOTOR SIZE	TOTAL STATION FULL LOAD AMPS		
RATED HP EACH	208 VOLT	230 VOLT	460 VOLT
1	27.3	23.7	11.9
1–1/2	33.3	28.9	14.5
2	39.3	34.1	17.1
3	49.6	43.2	21.6
5	70.6	61.4	30.7
7–1/2	96.1	83.5	41.8
10	118.5	103.0	51.5
15	170.9	148.5	74.3
20	215.7	187.5	93.8
25	---	---	116.5
30	---	---	136.0
40	---	---	175.0
50	---	---	217.3

Index No.
30800
REVISED 11/05/21
SHEET 3 OF 3

City of DeLand, Engineering Services
1102 S. Garfield Avenue, DeLand, Florida 32724

DATE: *11/05/2021*
CHECKED BY:
SCALE: *NOT TO SCALE*
DRAWN BY: *ERIC SAMPSON*

TITLE: *SANITARY LIFT STATION*

FILE: *LIFT_STATION_DETAILS_C_D.dwg*

3M LOCATING MARKER BALLS PROGRAMMABLE AND NON-PROGRAMMABLE NOTES:

- Programmable and Non-Programmable Marking Balls will be used on all Sewer, Potable and Reclaim projects
- For information on the Programmable and Non-Programmable Balls that the City requires see spec sheet for details
- Programmable Balls will be placed at all fittings ie. Tees, Couplings, 90, 45, and 22.
- Information will be recorded on a spread sheet. For information that needs to be recorded see spec sheet for an example template for the 3M Marker Balls
- Non-Programmable Marking Balls will used as follow:

- Potable: End of Service Line when buried
- Wastewater: Ball will be placed at the curb line to mark lateral location prior to end of service.
- Reclaim: End of Service Line when buried

- Desired bury depth is 1.5 feet to 3 feet. Five foot is the maximum depth for these devices

1420-LOCATER FOR MARKER BALLS

3M™ Dynatel™ Electronic Marker System (EMS) Marker Locators 1420 series is microprocessor-based systems that quickly and efficiently locate underground markers—years after construction or maintenance. -

The 3M™ Dynatel™ 1420 Marker Locators are designed to be accurate, fast and integrated allowing you to accurately and easily:

• Locate, read and write to 3M iD markers

• Pinpoint the depth and location of all existing models of properly installed underground passive EMS markers

• Conduct direct depth reading of markers

• Locate two different marker frequencies simultaneously

Specifications

2200RB Rechargeable Battery Not Included	2200RB Rechargeable Battery Not Included
Cable/Pipe Locate No	Cable/Pipe Locate No
Carrying Bag Included No	Carrying Bag Included No
Coupler Size No Coupler	Coupler Size No Coupler
Direct Connect Cable N/A	Direct Connect Cable N/A
EMS Caution Tape Finding Capability No	EMS Caution Tape Finding Capability No
Family 1420 Series	Family 1420 Series
Fault Finding Capability No	Fault Finding Capability No
	Locator Type Marker

3M DYNATEL LOCATING AND MARKING ELECTRONIC MARKER SYSTEM:

1423-XR/ID-POTABLE

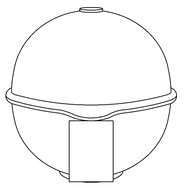

The 3M™ EMS Extended-Range Ball Markers have a self-leveling design providing accurate, horizontal position regardless of how it is placed in the ground, making the job of precisely locating underground facilities easier.

Featured Benefits

- Positive identification of underground water facilities
- iD Marker allows for programming of customer specific information
- Unique self leveling design simplifies installation
- No external power source needed
- Resistant to elements
- 5 foot (1.5 meter) detection distance
- Color conforms to APWA standards

SPECIFICATIONS:

COLOR:	BLUE
DIAMETER (METRIC):	10.4 CM
EMS CAUTION TAPE FINDING CAPABILITY:	N/A
MARKER DEPTH:	5 FEET (1.5M)
MARKER DIMENSION (INCH):	4 INCH DIAMETER
MARKER TYPE:	BALL
PROGRAMMABLE/PASSIVE:	PROGRAMMABLE
RANGE:	0 TO 5 LINEAR FOOT
RoHS 2011/65/EU Compliant:	UNDETERMINED
RoHS EU Comments:	CONTACT 3M FOR INFORMATION
Solution for:	ACCESS NETWORK: FTTH/FTTB/CATV
	ACCESS NETWORK: xDSL, LONG-HAUL/METRO
	LOOP NETWORK: OUTDOOR
	WIRELESS NETWORK: BACKHAUL

1424-XR/ID-SEWER

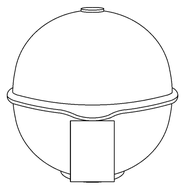

The 3M™ EMS Extended-Range Ball Markers have a self-leveling design providing accurate, horizontal position regardless of how it is placed in the ground, making the job of precisely locating underground facilities easier.

Featured Benefits

- Positive identification of underground wastewater facilities
- iD Marker allows for programming of customer specific information
- Unique self leveling design simplifies installation
- No external power source needed
- Resistant to elements
- 5 foot (1.5 meter) detection distance
- Color conforms to APWA standards

SPECIFICATIONS:

COLOR:	GREEN
DIAMETER (METRIC):	10.4 CM
EMS CAUTION TAPE FINDING CAPABILITY:	N/A
MARKER DEPTH:	5 FEET (1.5M)
MARKER DIMENSION (INCH):	4 INCH DIAMETER
MARKER TYPE:	BALL
NUMBER OF FREQUENCIES:	N/A
PROGRAMMABLE/PASSIVE:	PROGRAMMABLE
RANGE:	0 TO 5 LINEAR FOOT
RoHS 2011/65/EU Compliant:	UNDETERMINED
RoHS EU Comments:	CONTACT 3M FOR INFORMATION
Solution for:	ACCESS NETWORK: FTTH/FTTB/CATV
	ACCESS NETWORK: xDSL, LONG-HAUL/METRO
	LOOP NETWORK: OUTDOOR
	WIRELESS NETWORK: BACKHAUL

1428-XR/ID-RECLAIMED

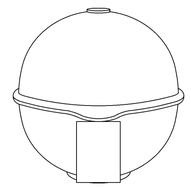

The 3M™ EMS Extended-Range Ball Markers have a self-leveling design providing accurate, horizontal position regardless of how it is placed in the ground, making the job of precisely locating underground facilities easier.

Featured Benefits

- Positive identification of underground general purpose / reclaimed water facilities
- iD Marker allows for programming of customer specific information
- Unique self leveling design simplifies installation
- No external power source needed
- Resistant to elements
- 5 foot (1.5 meter) detection distance
- Color conforms to APWA standards

SPECIFICATIONS:

COLOR:	PURPLE
DIAMETER (METRIC):	10.4 CM
EMS CAUTION TAPE FINDING CAPABILITY:	N/A
MARKER DEPTH:	5 FEET (1.5M)
MARKER DIMENSION (INCH):	4 INCH DIAMETER
MARKER TYPE:	BALL
NUMBER OF FREQUENCIES:	N/A
PROGRAMMABLE/PASSIVE:	PROGRAMMABLE
RANGE:	0 TO 5 LINEAR FOOT
RoHS 2011/65/EU Compliant:	UNDETERMINED
RoHS EU Comments:	CONTACT 3M FOR INFORMATION
Solution for:	ACCESS NETWORK: FTTH/FTTB/CATV
	ACCESS NETWORK: xDSL, LONG-HAUL/METRO
	LOOP NETWORK: OUTDOOR
	WIRELESS NETWORK: BACKHAUL

1403-XR-POTABLE

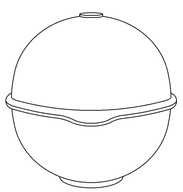

The 3M™ EMS Extended-Range Ball Markers have a self-leveling design providing accurate, horizontal position regardless of how it is placed in the ground, making the job of precisely locating underground facilities easier.

Featured Benefits

- Positive identification of underground water facilities
- Unique self leveling design simplifies installation
- No external power source needed
- Resistant to elements
- 5 foot (1.5 meter) detection distance
- Color conforms to APWA standards

SPECIFICATIONS:

COLOR:	BLUE
DIAMETER (METRIC):	10.4 CM
EMS CAUTION TAPE FINDING CAPABILITY:	N/A
MARKER DEPTH:	5 FEET (1.5M)
MARKER DIMENSION (INCH):	4 INCH DIAMETER
MARKER TYPE:	BALL
NUMBER OF FREQUENCIES:	N/A
PROGRAMMABLE/PASSIVE:	PASSIVE
RANGE:	0 TO 5 LINEAR FOOT
RoHS 2011/65/EU Compliant:	UNDETERMINED
RoHS EU Comments:	CONTACT 3M FOR INFORMATION
Solution for:	ACCESS NETWORK: FTTH/FTTB/CATV
	ACCESS NETWORK: xDSL, LONG-HAUL/METRO
	LOOP NETWORK: OUTDOOR
	WIRELESS NETWORK: BACKHAUL

1404-XR-SEWER

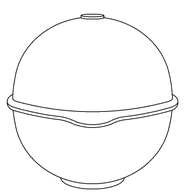

The 3M™ EMS Extended-Range Ball Markers have a self-leveling design providing accurate, horizontal position regardless of how it is placed in the ground, making the job of precisely locating underground facilities easier.

Featured Benefits

- Positive identification of underground wastewater facilities
- Unique self leveling design simplifies installation
- No external power source needed
- Resistant to elements
- 5 foot (1.5 meter) detection distance
- Color conforms to APWA standards

SPECIFICATIONS:

COLOR:	GREEN
DIAMETER (METRIC):	10.4 CM
EMS CAUTION TAPE FINDING CAPABILITY:	N/A
MARKER DEPTH:	5 FEET (1.5M)
MARKER DIMENSION (INCH):	4 INCH DIAMETER
MARKER TYPE:	BALL
NUMBER OF FREQUENCIES:	N/A
PROGRAMMABLE/PASSIVE:	PASSIVE
RANGE:	0 TO 5 LINEAR FOOT
RoHS 2011/65/EU Compliant:	UNDETERMINED
RoHS EU Comments:	CONTACT 3M FOR INFORMATION
Solution for:	ACCESS NETWORK: FTTH/FTTB/CATV
	ACCESS NETWORK: xDSL, LONG-HAUL/METRO
	LOOP NETWORK: OUTDOOR
	WIRELESS NETWORK: BACKHAUL

1408-XR-RECLAIMED

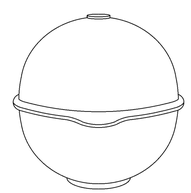

The 3M™ EMS Extended-Range Ball Markers have a self-leveling design providing accurate, horizontal position regardless of how it is placed in the ground, making the job of precisely locating underground facilities easier.

Featured Benefits

- Positive identification of underground general purpose facilities
- Unique self leveling design simplifies installation
- No external power source needed
- Resistant to elements
- 5 foot (1.5 meter) detection distance
- Color conforms to APWA standards

SPECIFICATIONS:

COLOR:	PURPLE
DIAMETER (METRIC):	10.4 CM
EMS CAUTION TAPE FINDING CAPABILITY:	N/A
MARKER DEPTH:	5 FEET (1.5M)
MARKER DIMENSION (INCH):	4 INCH DIAMETER
MARKER TYPE:	BALL
NUMBER OF FREQUENCIES:	N/A
PROGRAMMABLE/PASSIVE:	PASSIVE
RANGE:	0 TO 5 LINEAR FOOT
RoHS 2011/65/EU Compliant:	UNDETERMINED
RoHS EU Comments:	CONTACT 3M FOR INFORMATION
Solution for:	ACCESS NETWORK: FTTH/FTTB/CATV
	ACCESS NETWORK: xDSL, LONG-HAUL/METRO
	LOOP NETWORK: OUTDOOR
	WIRELESS NETWORK: BACKHAUL

CITY OF DELAND, FLORIDA
1102 S. GARFIELD AVENUE, DELAND, FLORIDA 32724

DATE: 11/05/2021
CHECKED BY: ERIC M. SAMPSON
SCALE: NOT TO SCALE
DRAWN BY: MARK LA GRECA

TITLE: UTILITY MARKER BALL LOCATERS

FILE: drive letter/details locations

NOTES:
1. WATER MAINS TO BE ON NORTH or EAST SIDE OF R.O.W., APPROX. 4 FT. BACK OF CURB UNLESS OTHERWISE AUTHORIZED BY CITY ENGINEER.
2. SERVICE CONNECTIONS TO BE 4 FT. FROM SIDE LOT LINE ON EITHER SIDE OF LOT. THESE SERVICES TO BE CONSISTENT WITHIN THE SUBDIVISION. DRIVEWAYS SHALL NOT BE BUILT OVER METERS.
3. ALL LINES SHALL BE CHLORINATED and PRESSURE TESTED (TEST FOR TWO HOURS @ 150 P.S.I.) UNDER THE DIRECTION OF THE UTILITIES DEPARTMENT, AFTER SUCCESSFUL COMPLETION OF THE TESTING and CHLORINATION, THE PRESSURE SHALL REMAIN ON THE SYSTEM AT ALL TIMES
4. TEN FT. SEPARATION REQUIRED BETWEEN PARALLEL WATER & SANITARY SEWER LINES.
5. SADDLE IS REQUIRED FOR ALL SERVICE CONNECTIONS TO 4" PVC MAINS. SADDLE IS REQUIRED FOR 2" SERVICE CONNECTIONS TO 6" and LARGER PVC MAINS. LARGEST SERVICE CONNECTION TO A 4" MAIN IS MIN. 1-1/2" and LARGEST TO ANY MAIN IS 2".
6. MINIMUM DISTANCE BETWEEN SERVICE TAPS TO BE NOT LESS THAN 36".
7. SINGLE SERVICE TAP SHALL BE 1".
8. DOUBLE SERVICE TAP SHALL BE 1-1/ 2".
9. ALL FITTINGS SHALL BE BRASS ONLY.
10. ALL CORPORATION STOPS, SHALL BE "FORD" OR "MUELLER" ONLY.
11. FREEZE PROTECTION VALVE, SHALL BE "CONBRACO" 40LF000FPV2F.
12. ALL 3/4", 1", 1-1/2", & 2" W.M., SHALL BE SDR 9, 200 psi, ASTMD 2737, (BLUE) POLYETHYLENE TUBING.
13. ALL BRASS FITTINGS SHALL BE LEAD FREE.
14. NO GALVANIZED FITTINGS CONNECTED TO BRASS FITTINGS.
15. PLANTINGS AND OBSTRUCTIONS SHOULD BE AVOIDED WITHIN 3 FT. RADIUS FOR SERVICE ACTIVITY.
16. METER BOX SHOULD HAVE A 2'X2'X6' CLEARANCE AROUND IT.

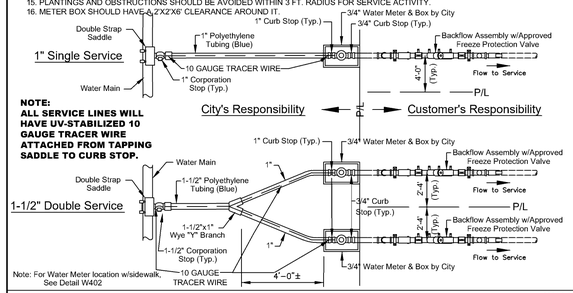

NOTE:
ALL SERVICE LINES WILL HAVE UV-STABILIZED 10 GAUGE TRACER WIRE ATTACHED FROM TAPPING SADDLE TO CURB STOP.

DATE: 11/05/2021 **WATER MAIN SERVICE CONNECTION (BACKFLOW)** **W401**
City of DeLand - Standard Details

NOTES:
1. WATER MAINS TO BE ON NORTH or EAST SIDE OF R.O.W., APPROX. 4 FT. BACK OF CURB UNLESS OTHERWISE AUTHORIZED BY CITY ENGINEER.
2. SERVICE CONNECTIONS TO BE 4 FT. FROM SIDE LOT LINE ON EITHER SIDE OF LOT. THESE SERVICES TO BE CONSISTENT WITHIN THE SUBDIVISION. DRIVEWAYS SHALL NOT BE BUILT OVER METERS.
3. ALL LINES SHALL BE CHLORINATED and PRESSURE TESTED (TEST FOR TWO HOURS @ 150 P.S.I.) UNDER THE DIRECTION OF THE UTILITIES DEPARTMENT, AFTER SUCCESSFUL COMPLETION OF THE TESTING and CHLORINATION, THE PRESSURE SHALL REMAIN ON THE SYSTEM AT ALL TIMES
4. TEN FT. SEPARATION REQUIRED BETWEEN PARALLEL WATER & SANITARY SEWER LINES.
5. SADDLE IS REQUIRED FOR ALL SERVICE CONNECTIONS TO 4" PVC MAINS. SADDLE IS REQUIRED FOR 2" SERVICE CONNECTIONS TO 6" and LARGER PVC MAINS. LARGEST SERVICE CONNECTION TO A 4" MAIN IS MIN. 1-1/2" and LARGEST TO ANY MAIN IS 2".
6. MINIMUM DISTANCE BETWEEN SERVICE TAPS TO BE NOT LESS THAN 36".
7. SINGLE SERVICE TAP SHALL BE 1".
8. DOUBLE SERVICE TAP SHALL BE 1-1/ 2".
9. ALL FITTINGS SHALL BE BRASS ONLY.
10. ALL CORPORATION STOPS, SHALL BE "FORD" OR "MUELLER" ONLY.
11. FREEZE PROTECTION VALVE, SHALL BE "CONBRACO" 40LF000FPV2F.
12. ALL 3/4", 1", 1-1/2", & 2" W.M., SHALL BE SDR 9, 200 psi, ASTMD 2737, (BLUE) POLYETHYLENE TUBING.
13. ALL BRASS FITTINGS SHALL BE LEAD FREE.
14. NO GALVANIZED FITTINGS CONNECTED TO BRASS FITTINGS.
15. PLANTINGS AND OBSTRUCTIONS SHOULD BE AVOIDED WITHIN 3 FT. RADIUS FOR SERVICE ACTIVITY.
16. METER BOX SHOULD HAVE A 2'X2'X6' CLEARANCE AROUND IT.

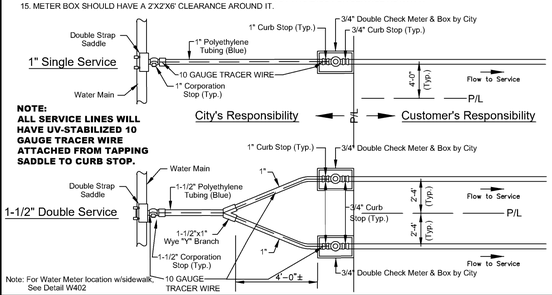

NOTE:
ALL SERVICE LINES WILL HAVE UV-STABILIZED 10 GAUGE TRACER WIRE ATTACHED FROM TAPPING SADDLE TO CURB STOP.

DATE: 11/05/2021 **WATER MAIN SERVICE CONNECTION (DOUBLE CHECK METER)** **W401A**
City of DeLand - Standard Details

NOTES:
1. WATER MAINS TO BE ON NORTH or EAST SIDE OF R.O.W., APPROX. 4 FT. BACK OF CURB UNLESS OTHERWISE AUTHORIZED BY CITY ENGINEER.
2. SERVICE CONNECTIONS TO BE 4 FT. FROM SIDE LOT LINE ON EITHER SIDE OF LOT. THESE SERVICES TO BE CONSISTENT WITHIN THE SUBDIVISION. DRIVEWAYS SHALL NOT BE BUILT OVER METERS.
3. ALL LINES SHALL BE CHLORINATED and PRESSURE TESTED (TEST FOR TWO HOURS @ 150 P.S.I.) UNDER THE DIRECTION OF THE UTILITIES DEPARTMENT, AFTER SUCCESSFUL COMPLETION OF THE TESTING and CHLORINATION, THE PRESSURE SHALL REMAIN ON THE SYSTEM AT ALL TIMES
4. TEN FT. SEPARATION REQUIRED BETWEEN PARALLEL WATER & SANITARY SEWER LINES.
5. SADDLE IS REQUIRED FOR ALL SERVICE CONNECTIONS TO 4" PVC MAINS. SADDLE IS REQUIRED FOR 2" SERVICE CONNECTIONS TO 6" and LARGER PVC MAINS. LARGEST SERVICE CONNECTION TO A 4" MAIN IS MIN. 1-1/2" and LARGEST TO ANY MAIN IS 2".
6. MINIMUM DISTANCE BETWEEN SERVICE TAPS TO BE NOT LESS THAN 36".
7. SINGLE SERVICE TAP SHALL BE 1".
8. DOUBLE SERVICE TAP SHALL BE 1-1/ 2".
9. ALL FITTINGS SHALL BE BRASS ONLY.
10. ALL CORPORATION STOPS, SHALL BE "FORD" OR "MUELLER" ONLY.
11. FREEZE PROTECTION VALVE, SHALL BE "CONBRACO" 40LF000FPV2F.
12. ALL 3/4", 1", 1-1/2", & 2" W.M., SHALL BE SDR 9, 200 psi, ASTMD 2737, (BLUE) POLYETHYLENE TUBING.
13. ALL BRASS FITTINGS SHALL BE LEAD FREE.
14. NO GALVANIZED FITTINGS CONNECTED TO BRASS FITTINGS.
15. METER BOX SHOULD HAVE A 2'X2'X6' CLEARANCE AROUND IT.

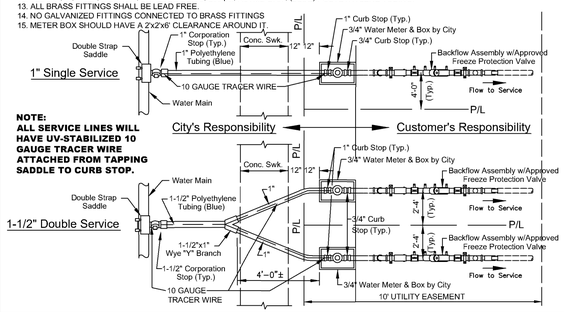

NOTE:
ALL SERVICE LINES WILL HAVE UV-STABILIZED 10 GAUGE TRACER WIRE ATTACHED FROM TAPPING SADDLE TO CURB STOP.

DATE: 11/05/2021 **WATER MAIN SERVICE CONNECTION WITH SIDEWALK (BACKFLOW)** **W402**
City of DeLand - Standard Details

NOTES:
1. WATER MAINS TO BE ON NORTH or EAST SIDE OF R.O.W., APPROX. 4 FT. BACK OF CURB UNLESS OTHERWISE AUTHORIZED BY CITY ENGINEER.
2. SERVICE CONNECTIONS TO BE 4 FT. FROM SIDE LOT LINE ON EITHER SIDE OF LOT. THESE SERVICES TO BE CONSISTENT WITHIN THE SUBDIVISION. DRIVEWAYS SHALL NOT BE BUILT OVER METERS.
3. ALL LINES SHALL BE CHLORINATED and PRESSURE TESTED (TEST FOR TWO HOURS @ 150 P.S.I.) UNDER THE DIRECTION OF THE UTILITIES DEPARTMENT, AFTER SUCCESSFUL COMPLETION OF THE TESTING and CHLORINATION, THE PRESSURE SHALL REMAIN ON THE SYSTEM AT ALL TIMES
4. TEN FT. SEPARATION REQUIRED BETWEEN PARALLEL WATER & SANITARY SEWER LINES.
5. SADDLE IS REQUIRED FOR ALL SERVICE CONNECTIONS TO 4" PVC MAINS. SADDLE IS REQUIRED FOR 2" SERVICE CONNECTIONS TO 6" and LARGER PVC MAINS. LARGEST SERVICE CONNECTION TO A 4" MAIN IS MIN. 1-1/2" and LARGEST TO ANY MAIN IS 2".
6. MINIMUM DISTANCE BETWEEN SERVICE TAPS TO BE NOT LESS THAN 36".
7. SINGLE SERVICE TAP SHALL BE 1".
8. DOUBLE SERVICE TAP SHALL BE 1-1/ 2".
9. ALL FITTINGS SHALL BE BRASS ONLY.
10. ALL CORPORATION STOPS, SHALL BE "FORD" OR "MUELLER" ONLY.
11. FREEZE PROTECTION VALVE, SHALL BE "CONBRACO" 40LF000FPV2F.
12. ALL 3/4", 1", 1-1/2", & 2" W.M., SHALL BE SDR 9, 200 psi, ASTMD 2737, (BLUE) POLYETHYLENE TUBING.
13. ALL BRASS FITTINGS SHALL BE LEAD FREE.
14. NO GALVANIZED FITTINGS CONNECTED TO BRASS FITTINGS
15. METER BOX SHOULD HAVE A 2'X2'X6' CLEARANCE AROUND IT.

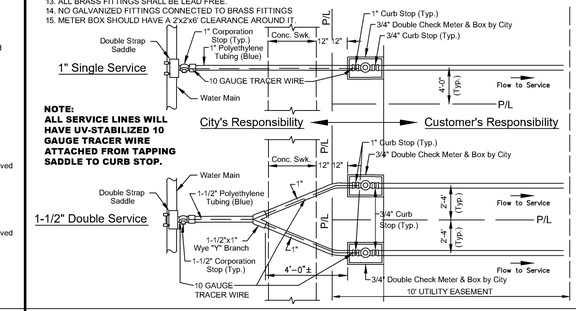

NOTE:
ALL SERVICE LINES WILL HAVE UV-STABILIZED 10 GAUGE TRACER WIRE ATTACHED FROM TAPPING SADDLE TO CURB STOP.

DATE: 11/05/2021 **WATER MAIN SERVICE CONN. WITH SIDEWALK (DBL. CHECK METER)** **W402A**
City of DeLand - Standard Details

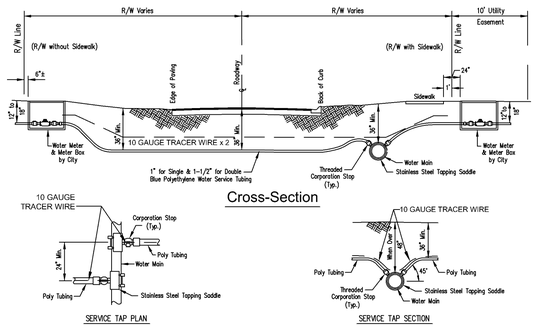

NOTES:
1. SINGLE WATER SERVICE SHALL BE, 1" POLYETHYLENE TUBING (BLUE).
2. DOUBLE WATER SERVICE SHALL BE, 1-1/2" POLYETHYLENE TUBING (BLUE).
3. WATER MAINS TO BE MIN. 36" BELOW GRADE and APPROX. 4' BACK OF CURB.
4. CURB STOP TO BE LOCATED APPROX. 2 FOOT BACK OF RIGHT-OF-WAY AND MUST HAVE LOCK WING.
5. SERVICE LINE TO BE MIN. 36" BELOW GRADE IN RIGHT-OF-WAY.
6. ALL 3/4", 1", 1-1/2" & 2" W.M., SHALL BE SDR 9, 200 psi, ASTMD 2737, (BLUE) POLYETHYLENE TUBING.
7. ALL TRACER WIRE SHALL BE (BLUE) UV-STABILIZED 10 GAUGE. DIRECTIONAL BORES REQUIRED TO HAVE TWO 10 GAUGE WIRES THAT ARE PULLED WITH DIRECTIONAL DRILL. OPEN CUT MAY USE ONLY ONE 10 GAUGE WIRE.
8. ALL SERVICE TAPS TO MEET AWWA STANDARD 45° FROM HORIZONTAL UNLESS PRIOR AUTHORIZATION RECEIVED FROM CITY.
9. ALL SERVICE LINES WILL HAVE TRACER WIRE ATTACHED FROM TAPPING SADDLE TO CURB STOP.

DATE: 11/05/2021 **WATER MAIN SERVICE LINES** **W403**
City of DeLand - Standard Details

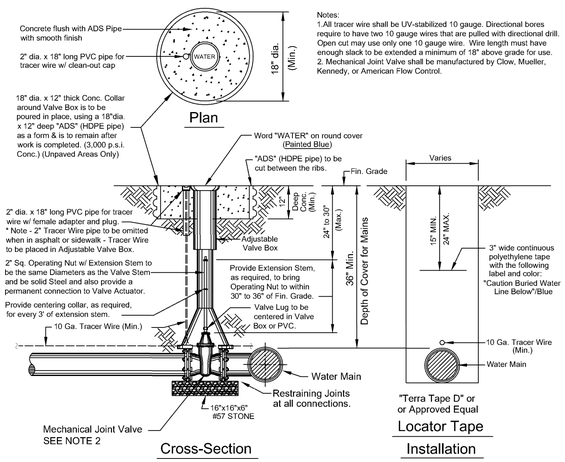

Notes:
1.All tracer wire shall be UV-stabilized 10 gauge. Directional bores require to have two 10 gauge wires that are pulled with directional drill. Open cut may use only one 10 gauge wire. Wire length must have enough slack to be extended a minimum of 18" above grade for use.
2. Mechanical Joint Valve shall be manufactured by Clow, Mueller, Kennedy, or American Flow Control.

DATE: 11/05/2021 **WATER MAIN VALVE SETTING** **W404**
City of Deland - Standard Details

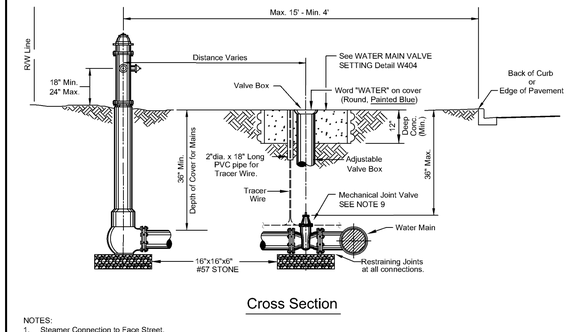

NOTES:
1. Steamer Connection to Face Street.
2. All Fire Hydrants to have 5 1/4" Valve Seat.
3. Fire Hydrants Shall be Placed at Street Corners or in the R.O.W. Adjacent to Side Lot Lines Whenever Possible.
4. See Detail W406 for Typical Connections & Fittings.
5. Fire Hydrants Shall be Painted City Safety Yellow w/Richards Paint No. 1009, Rust Shield Polyurethane.
6. Remove Chains from Cap.
7. Min. 3 ft. Clearance Should be Maintained Around Fire Hydrant for Emergency Operation Purposes.
8. All tracer wire shall be UV-stabilized 10 gauge. Directional bores require to have two 10 gauge wires that are pulled with directional drill. Open cut may use only one 10 gauge wire.
9. Mechanical Joint Valve shall be manufactured by Clow, Mueller, Kennedy, or American Flow Control.

ONLY APPROVED CITY FIRE HYDRANTS
— Mueller Super Centurion 200
— Clow Medallion

See W406 for Plan View

DATE: 11/05/2021 **FIRE HYDRANT SETTING SECTION** **W405**
City of DeLand -Standard Details

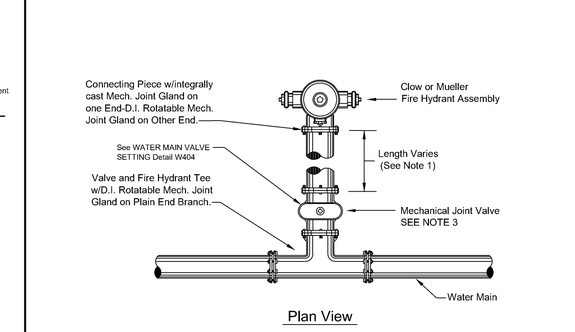

NOTES:
1. On Fire Hydrants Requiring Runout Last Two Joints Must Be Restrained Per Detail W409.
2. Fire Hydrants Should Have a 2'x2'x6' Clearance Around it.
3. Mechanical Joint Valve shall be manufactured by Clow, Mueller, Kennedy, or American Flow Control.

ONLY APPROVED CITY FIRE HYDRANTS
— Mueller Super Centurion 200
— Clow Medallion

See W405 for Cross Section

DATE: 11/05/2021 **FIRE HYDRANT SETTING PLAN** **W406**
City of DeLand - Standard Details

Notes:
1. All tracer wire shall be UV-stabilized 10 gauge. Directional bores require to have two 10 gauge wires that are pulled with directional drill. Open cut may use only one 10 gauge wire.

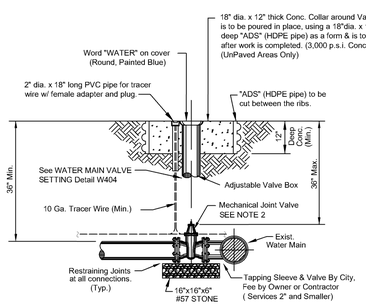

Notes:
1. For Wet Taps larger than 2", Sleeves & Valves will be furnished and installed by the contractor in the presence of the city inspector. Tapping sleeve shall be Ford, Romac, or JCM stainless steel only.
2. Mechanical Joint Valve shall be manufactured by Clow, Mueller, Kennedy, or American Flow Control.

DATE: 11/05/2021 **TAPPING SLEEVE & VALVE** **W407**
City of DeLand - Standard Details

THE FOLLOWING JOINTS MUST BE RESTRAINED IN ALL APPLICATIONS:
1. BEND - INLET AND OUTLET
2. TEE - OUTLET BRANCH
3. OFFSETS - INLET AND OUTLET
4. CAPS
5. PLUGS
6. LAST TWO(2) JOINTS ON A DEAD END RUN (min. 36')
7. LAST TWO(2) JOINTS ON A HYDRANT RUNOUT (min. 36')

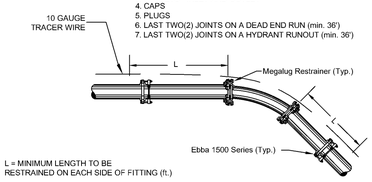

L = MINIMUM LENGTH TO BE RESTRAINED ON EACH SIDE OF FITTING (ft.)

NOM. PIPE SIZE	ELBOWS (deg.)				VALVE TEES
	11.25	22.50	45	90	
4	3	5	8	12	9
6	4	6	10	15	11
8	4	7	13	20	14
10	5	9	15	25	18
12	6	10	17	29	21
14	6	13	26	61	30
16	7	14	28	67	49
18	8	15	31	73	68
20	8	16	33	80	85

NOTE: THRUST RESTRAINT AT FITTINGS AND VALVES SHALL BE BY USE OF EBBA IRON MEGALUG RESTRAINERS. THRUST RESTRAINT BETWEEN PIPE JOINTS SHALL BE BY EBBA IRON SERIES 1500 RESTRAINERS.

DATE: 11/05/2021 **THRUST RESTRAINING DETAIL FOR PVC PIPE** **W408**
City of DeLand - Standard Details

THE FOLLOWING JOINTS MUST BE RESTRAINED IN ALL APPLICATIONS:
1. BEND - INLET AND OUTLET
2. TEE - OUTLET BRANCH
3. OFFSETS - INLET AND OUTLET
4. CAPS
5. PLUGS
6. LAST TWO(2) JOINTS ON A DEAD END RUN (min. 36')
7. LAST TWO(2) JOINTS ON A HYDRANT RUNOUT (min. 36')

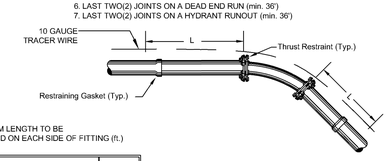

L = MINIMUM LENGTH TO BE RESTRAINED ON EACH SIDE OF FITTING (ft.)

NOM. PIPE SIZE	ELBOWS (deg.)				VALVE TEES
	11.25	22.50	45	90	
4	3	5	8	12	9
6	4	6	10	15	11
8	4	7	13	20	14
10	5	9	15	25	18
12	6	10	17	29	21
16	6	13	26	63	70
18	9	17	36	86	88
20	10	19	39	94	108
24	11	22	45	109	145

NOTE: THRUST RESTRAINT ON SLIPJOINT DUCTILE IRON PIPE SHALL BE U.S. PIPE FIELD LOCK GASKETS FOR TYTON JOINT PIPE or AMERICAN FAST-GRIP GASKETS FOR AMERICAN FASTITE PIPE. THRUST RESTRAINT ON DUCTILE IRON FITTINGS SHALL BE PROVIDED BY THE USE OF MEGALUG RETAINERS AND MECHANICAL JOINT FITTINGS.

DATE: 11/05/2021 **THRUST RESTRAINING DETAIL FOR DUCTILE IRON PIPE** **W409**
City of DeLand - Standard Details

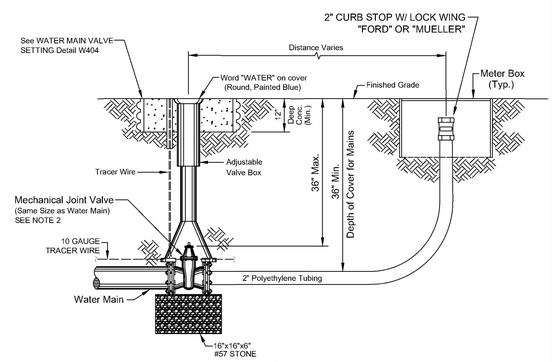

Notes:
1. All tracer wire shall be UV-stabilized 10 gauge. Directional bores require to have two 10 gauge wires that are pulled with directional drill. Open cut may use only one 10 gauge wire.
2. Mechanical Joint Valve shall be manufactured by Clow, Mueller, Kennedy, or American Flow Control.

DATE: 11/05/2021 **WATER MAIN BLOWOFF DETAIL** **W410**
City of DeLand - Standard Details

CITY OF DELAND, FLORIDA
1102 S. GARFIELD AVENUE, DELAND, FLORIDA 32724

DATE: 11/05/2021
CHECKED BY: NAME
NOT TO SCALE
ERIC SAMPSON

TITLE: WATER SYSTEM DETAILS (Sheet 1)

FILE: drive letter/details locations

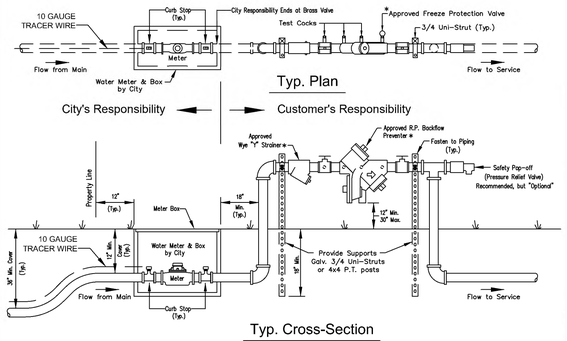

NOTES:
1. Installation Requirements: Above Ground Piping & Fittings shall be Copper or Brass Only (No PVC).
2. Device shall be Properly Supported.
3. Device shall be Protected from Freezing.
4. Freeze protection valve shall be "CONBRACO" 40LF000FPV2F.
5. Device shall be Installed Level, Tested and Certified.
6. Certification of testing shall be placed in Permit Box for inspector's verification.
7. All fittings shall be Lead Free.
8. All corporation stops, shall be "Ford" or "Mueller" only.
9. All installations shall be Approved by the City Inspector.
10. All tracer wire shall be UV-stabilized 10 gauge. Directional bores require to have two 10 gauge wires that are pulled with directional drill. Open cut may use only one 10 gauge wire.

*APPROVED REDUCED PRESSURE DEVICE
"Wilkins" 975XL2
"Watts" LF919-QT

*APPROVED FREEZE PROTECTION VALVE
"Conbraco" (Apollo) 40LF000FPV2F

*APPROVED WYE "Y" STRAINER
"Conbraco" (Apollo) #YB34LF, #YB1LF, #YB114LF, #YB112LF, #YB2LF

DATE: 11/05/2021 **WATER METER & BACKFLOW ASSEMBLY - 1" THRU 2-1/2" MODELS** **W411**

City of DeLand - Standard Details

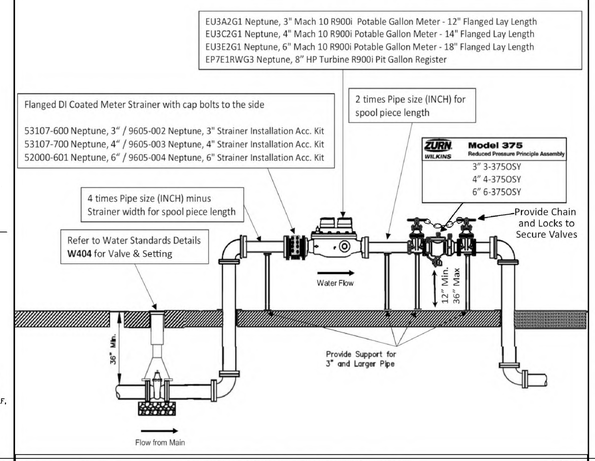

DATE: 11/05/2021 **3" AND ABOVE POTABLE WATER METER SET** **W412**

City of DeLand - Standard Details

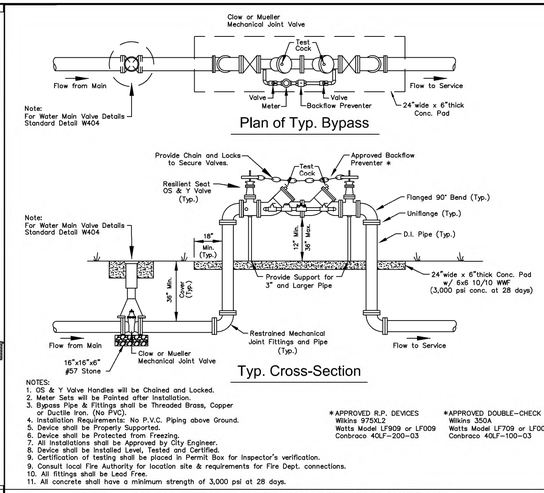

NOTES:
1. OS & Y Valve Handles will be Chained and Locked.
2. Meter Sets will be Pointed after Installation.
3. Bypass Pipe & Fittings shall be Threaded Brass, Copper or Ductile Iron. (No PVC).
4. Installation Requirements: No P.V.C. Piping above Ground.
5. Device shall be Properly Supported.
6. Device shall be Protected from Freezing.
7. All Installations shall be Approved by City Engineer.
8. Device shall be Installed Level, Tested and Certified.
9. Certification of testing shall be placed in Permit Box for Inspector's verification.
9. Consult local Fire Authority for location site & requirements for Fire Dept. connections.
10. All fittings shall be Lead Free.
11. All concrete shall have a minimum strength of 3,000 psi at 28 days.

*APPROVED R.P. DEVICES
Wilkins 975XL2
Watts Model LF909 or LF009
Conbraco 40LF-200-03

*APPROVED DOUBLE-CHECK VALVES
Wilkins 350A
Watts Model LF709 or LF007
Conbraco 40LF-100-03

DATE: 11/05/2021 **DOUBLE DETECTOR CHECK VALVE ASSEMBLY - 4" THRU 12"** **W413**

City of DeLand - Standard Details

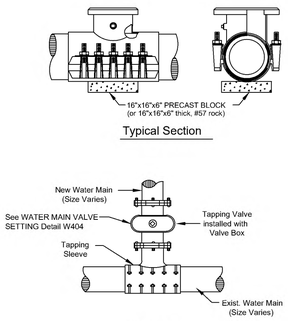

NOTES:
1. ALL TAPPING SLEEVES ABOVE 2" IN DIA. SHALL BE STAINLESS STEEL ONLY.
2. INSTALL REQUIRED RESTRAINED JOINTS. IN NO INSTANCE SHALL THRUST BLOCKS BE PERMITTED.
3. ONLY ROMAC INDUSTRIES, FORD STAINLESS STEEL OR JCM STAINLESS STEEL TAPPING SLEEVES ARE TO BE USED.
4. IN NEW CONSTRUCTION, ALL SADDLES, SLEEVES, VALVES, CORPORATION & CURB STOPS, TUBING WILL BE FURNISHED BY THE CONTRACTOR.

DATE: 11/05/2021 **STAINLESS STEEL TAPPING SLEEVE** **W414**

City of DeLand - Standard Details

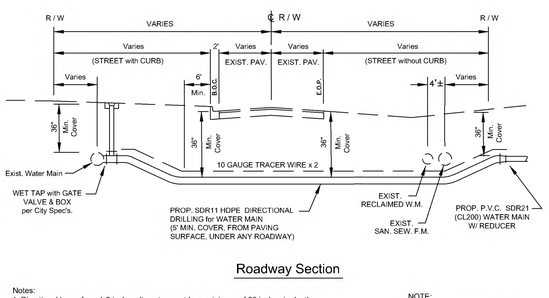

Notes:
1. Directional bores from 1-3 inches diameter must be a minimum of 36 inches in depth below edge of pavement.
2. Directional bores, 4 inches or greater, must be 10 times the diameter of the bore/backreamer, whichever diameter is greater, in depth, below edge of pavement and to extend a minimum of 6 feet beyond the edge of pavement, either side.
3. Any/All directional bore affiliated drill mud/slurry must be cleaned/reclaimed from right of way/bore pits and disposed of on approved off-site location.
4. All tracer wire shall be UV-stabilized 10 gauge. Directional bores require to have two 10 gauge wires that are pulled with directional drill. Open cut may use only one 10 gauge wire.

NOTE:
Tie Exist. Water Service Lines into New Water Main as per City Specifications.

DATE: 11/05/2021 **DIRECTIONAL BORE** **W415**

City of DeLand - Standard Details

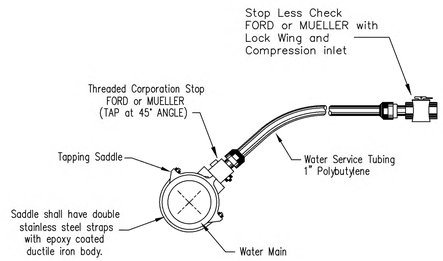

DATE: 11/05/2021 **CHLORINATION TAP** **W416**

City of DeLand - Standard Details

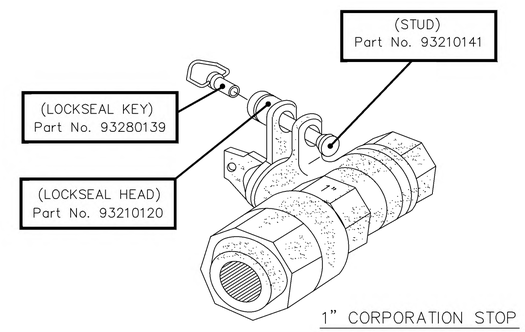

NOTE:
ALL SERVICE LINE WHIPS SHALL BE BULLET LOCKED ***OFF*** BY THE CONTRACTOR AFTER INSTALLATION AND SAMPLING HAVE BEEN COMPLETED

Manufacturer:
"FIROMATIC LOCKSEAL"

DATE: 11/05/2021 **WATER METER LOCKSEAL ASSEMBLY** **W418**

City of DeLand - Standard Details

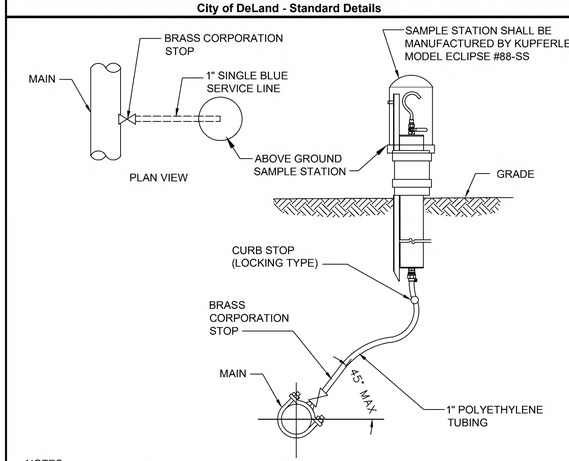

NOTES:
1. A 1 INCH SAMPLE STATION INSTALLED AT THE END OF A CUL-DE-SAC CAN ALSO SERVE AS A BLOW -OFF VALVE WHEN BOTH ARE REQUIRED.

DATE: 11/05/2021 **WATER SAMPLE STATION** **W419**

City of DeLand - Standard Details

LOCATION OF PUBLIC WATER SYSTEM MAINS IN ACCORDANCE WITH F.A.C. RULE 62-555.314

Other pipe	Horizontal Separation	Crossings (1)	Joint Spacing @ Crossing (Full Joint Centered)
Storm Sewer Stormwater Force Main, Reclaimed Water (2)	WATER MAIN 3 ft. minimum	WATER MAIN 12 inches is the minimum except for storm sewer,then 6 inches is the minimum and 12 inches is preferred	Alternate 3' ft. minimum WATER MAIN
Vacuum Sanitary Sewer	WATER MAIN 10 ft. preferred 3 ft. minimum	WATER MAIN 12 inches preferred 6 inches minimum	Alternate 3' ft. minimum WATER MAIN
Gravity Sewer Sanitary Sewer, Sanitary Sewer Force Main, Reclaimed Water (4)	WATER MAIN 10 ft. preferred 6 ft. minimum (3)	WATER MAIN 12 inches is the minimum except for gravity sewer,then 6 inches is the minimum and 12 inches is preferred	Alternate 6' ft. minimum WATER MAIN
On-Site Sewage Treatment & Disposal System(4)	10 ft minimum	---	---

(1) Water Main Should Cross Above other pipe. When Water Main Must Be Below Other Pipe,the Minimum Separation is 12" inches.
(2) Reclaimed Water Regulated Under Part III of chapter 62-610, F.A.C.
(3) 3 ft. for Gravity Sanitary sewer where the Bottom of the Water Main is laid at least 6 inches above the top of gravity sanitary sewer.
(4) Reclaimed water not regulated under Part III of Chapter 62-160, F.A.C.

DATE: 11/05/2021 **WATER PIPE SEPERATION REQUIREMENTS** **W420**

City of DeLand - Standard Details

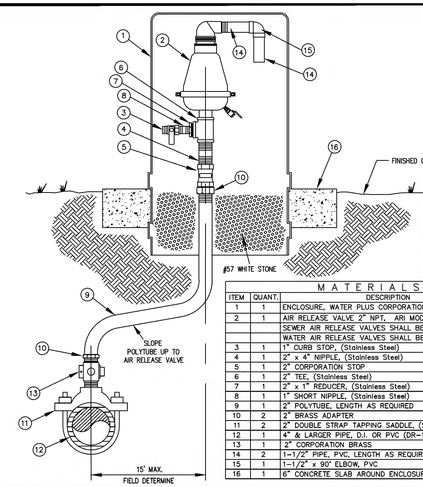

NOTE: (1) VENTED ENCLOSURE TO BE COLOR CODED AS FOLLOWS:
WATER MAIN - BLUE
FORCE MAIN - GREEN
REUSE MAIN - PURPLE (PANTONE 522C)

MATERIALS

ITEM	QUANT.	DESCRIPTION
1	1	ENCLOSURE, WATER PLUS CORPORATION MODEL #131632
2	1	AIR RELEASE VALVE 2" NPT, ARI MODEL D-025 P SEWER AIR RELEASE VALVES SHALL BE ARI MODEL D-025 P WATER AIR RELEASE VALVES SHALL BE VALMATIC OR EQUAL
3	1	1" CURB STOP, (Stainless Steel)
4	1	2" x 4" NIPPLE, (Stainless Steel)
5	1	2" CORPORATION STOP
6	1	2" TEE, (Stainless Steel)
7	1	2" x 1" REDUCER, (Stainless Steel)
8	1	1" SHORT NIPPLE, (Stainless Steel)
9	1	2" POLYTUBE, LENGTH AS REQUIRED
10	2	2" BRASS ADAPTER
11	2	2" DOUBLE STRAP TAPPING SADDLE, (Stainless Steel)
12	1	4" & LARGER PIPE, D.I. OR PVC (DR-18)
13	1	2" CORPORATION BRASS
14	2	1-1/2" PIPE, PVC, LENGTH AS REQUIRED
15	1	1-1/2" x 90° ELBOW, PVC
16	1	6" CONCRETE SLAB AROUND ENCLOSURE

DATE: 11/05/2021 **OFFSET AIR RELEASE VALVE** **W421**

City of DeLand - Standard Details

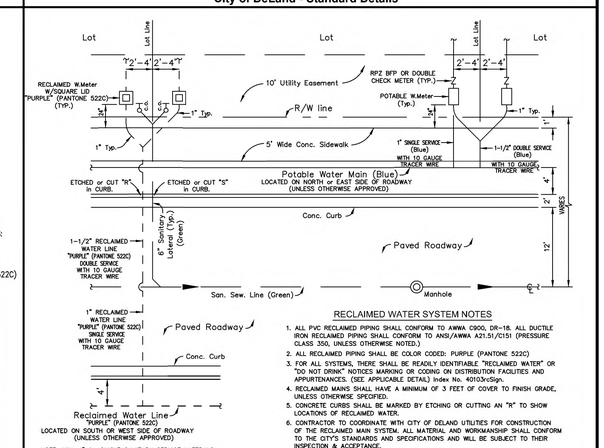

RECLAIMED WATER SYSTEM NOTES
1. ALL PVC RECLAIMED PIPING SHALL CONFORM TO AWWA C900, DR-18, ALL DUCTILE IRON RECLAIMED PIPING SHALL CONFORM TO ANSI/AWWA A21.51/C151 (PRESSURE CLASS 350, UNLESS OTHERWISE NOTED.)
2. ALL RECLAIMED PIPING SHALL BE COLOR CODED: PURPLE (PANTONE 522C)
3. FOR ALL SYSTEMS, THERE SHALL BE READILY IDENTIFIABLE "RECLAIMED WATER" OR "DO NOT DRINK" NOTICES MARKING OR CODING ON DISTRIBUTION FACILITIES AND APPURTENANCES. (SEE APPLICABLE DETAIL) Index No. 40103w/Sign.
4. RECLAIMED MAINS SHALL HAVE A MINIMUM OF 3 FEET OF COVER TO FINISH GRADE, UNLESS OTHERWISE SPECIFIED.
5. CONCRETE CURBS SHALL BE MARKED BY ETCHING OR CUTTING AN "R" TO SHOW LOCATIONS OF RECLAIMED WATER.
6. CONTRACTOR TO COORDINATE WITH CITY OF DELAND UTILITIES FOR CONSTRUCTION OF THE RECLAIMED MAIN SYSTEM. ALL MATERIAL AND WORKMANSHIP SHALL CONFORM TO THE CITY'S STANDARDS AND SPECIFICATIONS AND WILL BE SUBJECT TO THEIR INSPECTION & ACCEPTANCE.
7. ALL RECLAIMED WATER VALVE BOXES SHALL HAVE RECTANGULAR SHAPED COVERS, AND SHALL BE PAINTED PURPLE (PANTONE 522C).
8. ALL TRACER WIRE SHALL BE UV-STABILIZED 10 GAUGE. DIRECTIONAL BORES REQUIRED TO HAVE TWO 10 GAUGE WIRES THAT ARE PULLED WITH DIRECTIONAL DRILL. OPEN CUT MAY USE ONLY ONE 10 GAUGE WIRE.

DATE: 11/05/2021 **RESIDENTIAL UTILITY LAYOUT** **W422**

City of DeLand - Standard Details

CITY OF DELAND, FLORIDA
1102 S. GARFIELD AVENUE, DELAND, FLORIDA 32724

DATE: 11/05/2021
CHECKED BY: NAME
SCALE: NOT TO SCALE
DRAWN BY: ERIC SAMPSON

TITLE: WATER SYSTEM DETAILS (Sheet 2)

FILE: drive letter/details locations

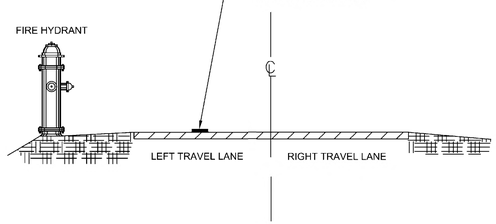

DATE: 11/05/2021 **REFLECTIVE PAVEMENT MARKER FOR FIRE HYDRANT LOCATION** W423

City of DeLand - Standard Details

Approved Ford Valve for Service Lines

1" SERVICE

Pack Joint for Copper or Plastic Tubing (CTS) Inlet by Meter Swivel Nut

Catalog Number	Description: Valve Size	Description: Serv. Line Size	Description: Meter Size	Approx. Wt. Lbs.
B43-211W-NL	5/8"	1/2"	5/8"	1.4
B43-212W-NL	5/8"	1/2"	5/8"x3/4" & 3/4"	1.5
►♦ B43-231W-NL	5/8"	3/4"	5/8"	1.6
►♦ B43-232W-NL	5/8"	3/4"	5/8"x3/4" & 3/4"	1.7
► B43-331W-NL	3/4"	3/4"	5/8"	2.1
►♦ B43-332W-NL	3/4"	3/4"	5/8"x3/4" & 3/4"	2.4
►♦ B43-334W-NL	3/4"	3/4"	1"	2.3
► B43-341W-NL	3/4"	1"	5/8"	2.7
►♦ B43-342W-NL	3/4"	1"	5/8"x3/4" & 3/4"	2.4
►♦ B43-344W-NL	3/4"	1"	1"	2.7
►♦ B43-444W-NL	1"	1"	1"	3.2
B43-454W-NL	1"	1-1/4"	1"	3.4

2" SERVICE

Pack Joint for Copper or Plastic Tubing (CTS) by Female Iron Pipe Thread

Catalog Number	Valve Size	CTS End	FIP End	Approx. Wt. Lbs.
►♦ * B41-333-NL	3/4"	3/4"	3/4"	2.0
►♦ B41-334-NL	3/4"	3/4"	1"	2.1
►♦ B41-343-NL	3/4"	1"	3/4"	2.2
►♦ B41-344-NL	3/4"	1"	1"	2.4
♦ BL41-344-4-875-NL	3/4"	1"	1"	3.1
►♦ * B41-444-NL	1"	1"	1"	2.8
♦ B41-454-NL	1"	1-1/4"	1"	3.2
♦ B41-455-NL	1"	1-1/4"	1-1/4"	3.7
♦ B41-555-NL	1-1/4"	1-1/4"	1-1/4"	5.6
♦ **B41-666-NL	1-1/2"	1-1/2"	1-1/2"	7.0
B41-677-NL	1-1/2"	2"	2"	9.6
♦ **B41-777-NL	2"	2"	2"	11.1

DATE: 11/05/2021 **VALVE FOR WATER AND RECLAIM SERVICE LINE** W424

City of DeLand - Standard Details

Approved Muller Valve for Service Lines

1" SERVICE

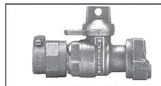

P-24350N

Mueller 300 Ball Straight Meter Valve
Mueller Pack Joint Connection for CTS O.D.* tubing x meter swivel nut**.
Quarter turn check - lock wing. 360° turn option available by adding -3 suffix to catalog number.
Example: P-24350-3

Catalog size	3/4"x5/8" R †	3/4" R †	3/4"	5/8"x3/4"x1"	1" R †	1"
Meter size	5/8"	5/8"x3/4", 3/4"	5/8"x3/4", 3/4"	5/8"x3/4", 3/4"	1"	1"
Tubing size	3/4"	3/4"	3/4"	1"	1"	1"

2" SERVICE

P-25172N

Mueller 300 Ball Curb Valve
Inlet: Mueller Pack Joint Connection for CTS O.D.* tubing
Outlet: F.I.P. thread
Quarter turn check-this valve may be ordered with 360° turn option by adding -3 to end of catalog number (P-25172-3)

3/4"R	3/4"	1"R	1"	1-1/2"	2"

DATE: 11/05/2021 **VALVE FOR WATER AND RECLAIM SERVICE LINE** W425

City of DeLand - Standard Details

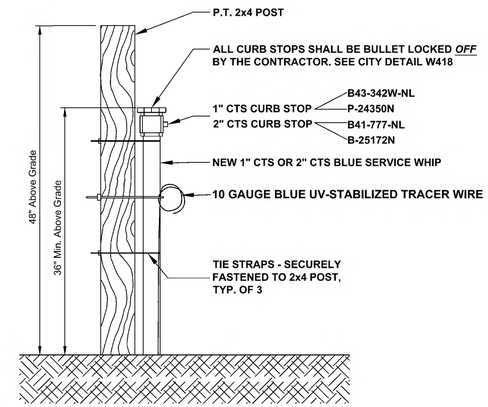

DATE: 11/05/2021 **NEW POTABLE SERVICE WHIP** W426

City of DeLand - Standard Details

CITY OF DELAND, FLORIDA
1102 S. GARFIELD AVENUE, DELAND, FLORIDA 32724

DATE: 11/05/2021
CHECKED BY: NAME
SCALE: NOT TO SCALE
DRAWN BY: ERIC SAMPSON

TITLE: WATER SYSTEM DETAILS (Sheet 3)

FILE: drive letter/details locations

NOTES:
1. WATER MAINS TO BE ON NORTH or EAST SIDE OF R.O.W., APPROX. 4 FT. BACK OF CURB UNLESS OTHERWISE AUTHORIZED BY CITY ENGINEER.
2. SERVICE CONNECTIONS TO BE 4 FT. FROM SIDE LOT LINE ON EITHER SIDE OF LOT. THESE SERVICES TO BE CONSISTENT WITHIN THE SUBDIVISION. DRIVEWAYS SHALL NOT BE BUILT OVER METERS.
3. ALL LINES SHALL BE CHLORINATED and PRESSURE TESTED (TEST FOR TWO HOURS @ 150 P.S.I.) UNDER THE DIRECTION OF THE UTILITIES DEPARTMENT, AFTER SUCCESSFUL COMPLETION OF THE TESTING and CHLORINATION, THE PRESSURE SHALL REMAIN ON THE SYSTEM AT ALL TIMES
4. TEN FT. SEPARATION REQUIRED BETWEEN PARALLEL WATER & SANITARY SEWER LINES.
5. SADDLE IS REQUIRED FOR ALL SERVICE CONNECTIONS TO 4" PVC MAINS. SADDLE IS REQUIRED FOR 2" SERVICE CONNECTIONS TO 6" and LARGER PVC MAINS. LARGEST SERVICE CONNECTION TO A 4" MAIN IS MIN. 1-1/2" and LARGEST TO ANY MAIN IS 2".
6. MINIMUM DISTANCE BETWEEN SERVICE TAPS TO BE NOT LESS THAN 36".
7. SINGLE SERVICE TAP SHALL BE 1".
8. DOUBLE SERVICE TAP SHALL BE 1-1/ 2".
9. ALL FITTINGS SHALL BE BRASS ONLY.
10. ALL CORPORATION STOPS, SHALL BE "FORD" OR "MUELLER" ONLY.
11. FREEZE PROTECTION VALVE, SHALL BE "CONBRACO" 40LF000FPV2F.
12. ALL 3/4", 1", 1-1/2", & 2" W.M., SHALL BE SDR 9, 200 psi, ASTMD 2737, (BLUE) POLYETHYLENE TUBING.
13. ALL BRASS FITTINGS SHALL BE LEAD FREE.
14. NO GALVANIZED FITTINGS CONNECTED TO BRASS FITTINGS.
15. PLANTINGS AND OBSTRUCTIONS SHOULD BE AVOIDED WITHIN 3 FT. RADIUS FOR SERVICE ACTIVITY.
16. METER BOX SHOULD HAVE A 2'X2'X6' CLEARANCE AROUND IT.

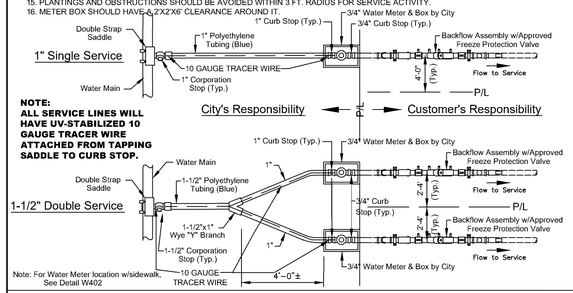

NOTE:
ALL SERVICE LINES WILL HAVE UV-STABILIZED 10 GAUGE TRACER WIRE ATTACHED FROM TAPPING SADDLE TO CURB STOP.

Note: For Water Meter location w/sidewalk, See Detail W402

DATE: 11/05/2021 **WATER MAIN SERVICE CONNECTION (BACKFLOW)** **W401**

City of DeLand - Standard Details

NOTES:
1. WATER MAINS TO BE ON NORTH or EAST SIDE OF R.O.W., APPROX. 4 FT. BACK OF CURB UNLESS OTHERWISE AUTHORIZED BY CITY ENGINEER.
2. SERVICE CONNECTIONS TO BE 4 FT. FROM SIDE LOT LINE ON EITHER SIDE OF LOT. THESE SERVICES TO BE CONSISTENT WITHIN THE SUBDIVISION. DRIVEWAYS SHALL NOT BE BUILT OVER METERS.
3. ALL LINES SHALL BE CHLORINATED and PRESSURE TESTED (TEST FOR TWO HOURS @ 150 P.S.I.) UNDER THE DIRECTION OF THE UTILITIES DEPARTMENT, AFTER SUCCESSFUL COMPLETION OF THE TESTING and CHLORINATION, THE PRESSURE SHALL REMAIN ON THE SYSTEM AT ALL TIMES
4. TEN FT. SEPARATION REQUIRED BETWEEN PARALLEL WATER & SANITARY SEWER LINES.
5. SADDLE IS REQUIRED FOR ALL SERVICE CONNECTIONS TO 4" PVC MAINS. SADDLE IS REQUIRED FOR 2" SERVICE CONNECTIONS TO 6" and LARGER PVC MAINS. LARGEST SERVICE CONNECTION TO A 4" MAIN IS MIN. 1-1/2" and LARGEST TO ANY MAIN IS 2".
6. MINIMUM DISTANCE BETWEEN SERVICE TAPS TO BE NOT LESS THAN 36".
7. SINGLE SERVICE TAP SHALL BE 1".
8. DOUBLE SERVICE TAP SHALL BE 1-1/ 2".
9. ALL FITTINGS SHALL BE BRASS ONLY.
10. ALL CORPORATION STOPS, SHALL BE "FORD" OR "MUELLER" ONLY.
11. ALL 3/4", 1", 1-1/2", & 2" W.M., SHALL BE SDR 9, 200 psi, ASTMD 2737, (BLUE) POLYETHYLENE TUBING.
12. ALL BRASS FITTINGS SHALL BE LEAD FREE.
13. NO GALVANIZED FITTINGS CONNECTED TO BRASS FITTINGS.
14. PLANTINGS AND OBSTRUCTIONS SHOULD BE AVOIDED WITHIN 3 FT. RADIUS FOR SERVICE ACTIVITY.
15. METER BOX SHOULD HAVE A 2'X2'X6' CLEARANCE AROUND IT.

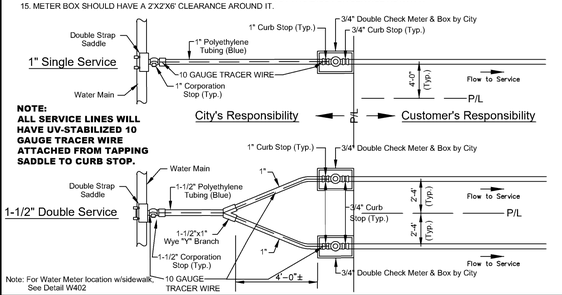

NOTE:
ALL SERVICE LINES WILL HAVE UV-STABILIZED 10 GAUGE TRACER WIRE ATTACHED FROM TAPPING SADDLE TO CURB STOP.

Note: For Water Meter location w/sidewalk, See Detail W402

DATE: 11/05/2021 **WATER MAIN SERVICE CONNECTION (DOUBLE CHECK METER)** **W401A**

City of DeLand - Standard Details

NOTES:
1. WATER MAINS TO BE ON NORTH or EAST SIDE OF R.O.W., APPROX. 4 FT. BACK OF CURB UNLESS OTHERWISE AUTHORIZED BY CITY ENGINEER.
2. SERVICE CONNECTIONS TO BE 4 FT. FROM SIDE LOT LINE ON EITHER SIDE OF LOT. THESE SERVICES TO BE CONSISTENT WITHIN THE SUBDIVISION. DRIVEWAYS SHALL NOT BE BUILT OVER METERS.
3. ALL LINES SHALL BE CHLORINATED and PRESSURE TESTED (TEST FOR TWO HOURS @ 150 P.S.I.) UNDER THE DIRECTION OF THE UTILITIES DEPARTMENT, AFTER SUCCESSFUL COMPLETION OF THE TESTING and CHLORINATION, THE PRESSURE SHALL REMAIN ON THE SYSTEM AT ALL TIMES
4. TEN FT. SEPARATION REQUIRED BETWEEN PARALLEL WATER & SANITARY SEWER LINES.
5. SADDLE IS REQUIRED FOR ALL SERVICE CONNECTIONS TO 4" PVC MAINS. SADDLE IS REQUIRED FOR 2" SERVICE CONNECTIONS TO 6" and LARGER PVC MAINS. LARGEST SERVICE CONNECTION TO A 4" MAIN IS MIN. 1-1/2" and LARGEST TO ANY MAIN IS 2".
6. MINIMUM DISTANCE BETWEEN SERVICE TAPS TO BE NOT LESS THAN 36".
7. SINGLE SERVICE TAP SHALL BE 1".
8. DOUBLE SERVICE TAP SHALL BE 1-1/ 2".
9. ALL FITTINGS SHALL BE BRASS ONLY.
10. ALL CORPORATION STOPS, SHALL BE "FORD" OR "MUELLER" ONLY.
11. FREEZE PROTECTION VALVE, SHALL BE "CONBRACO" 40LF000FPV2F.
12. ALL 3/4", 1", 1-1/2", & 2" W.M., SHALL BE SDR 9, 200 psi, ASTMD 2737, (BLUE) POLYETHYLENE TUBING.
13. ALL BRASS FITTINGS SHALL BE LEAD FREE.
14. NO GALVANIZED FITTINGS CONNECTED TO BRASS FITTINGS.
15. METER BOX SHOULD HAVE A 2'X2'X6' CLEARANCE AROUND IT.

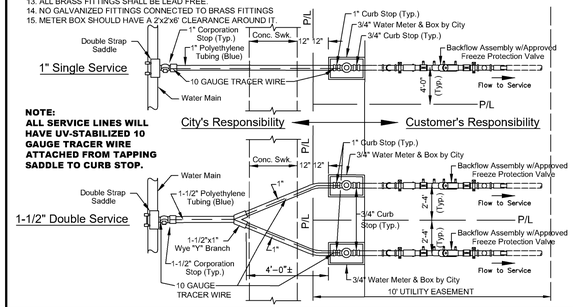

NOTE:
ALL SERVICE LINES WILL HAVE UV-STABILIZED 10 GAUGE TRACER WIRE ATTACHED FROM TAPPING SADDLE TO CURB STOP.

DATE: 11/05/2021 **WATER MAIN SERVICE CONNECTION WITH SIDEWALK (BACKFLOW)** **W402**

City of DeLand - Standard Details

NOTES:
1. WATER MAINS TO BE ON NORTH or EAST SIDE OF R.O.W., APPROX. 4 FT. BACK OF CURB UNLESS OTHERWISE AUTHORIZED BY CITY ENGINEER.
2. SERVICE CONNECTIONS TO BE 4 FT. FROM SIDE LOT LINE ON EITHER SIDE OF LOT. THESE SERVICES TO BE CONSISTENT WITHIN THE SUBDIVISION. DRIVEWAYS SHALL NOT BE BUILT OVER METERS.
3. ALL LINES SHALL BE CHLORINATED and PRESSURE TESTED (TEST FOR TWO HOURS @ 150 P.S.I.) UNDER THE DIRECTION OF THE UTILITIES DEPARTMENT, AFTER SUCCESSFUL COMPLETION OF THE TESTING and CHLORINATION, THE PRESSURE SHALL REMAIN ON THE SYSTEM AT ALL TIMES
4. TEN FT. SEPARATION REQUIRED BETWEEN PARALLEL WATER & SANITARY SEWER LINES.
5. SADDLE IS REQUIRED FOR ALL SERVICE CONNECTIONS TO 4" PVC MAINS. SADDLE IS REQUIRED FOR 2" SERVICE CONNECTIONS TO 6" and LARGER PVC MAINS. LARGEST SERVICE CONNECTION TO A 4" MAIN IS MIN. 1-1/2" and LARGEST TO ANY MAIN IS 2".
6. MINIMUM DISTANCE BETWEEN SERVICE TAPS TO BE NOT LESS THAN 36".
7. SINGLE SERVICE TAP SHALL BE 1".
8. DOUBLE SERVICE TAP SHALL BE 1-1/ 2".
9. ALL FITTINGS SHALL BE BRASS ONLY.
10. ALL CORPORATION STOPS, SHALL BE "FORD" OR "MUELLER" ONLY.
11. FREEZE PROTECTION VALVE, SHALL BE "CONBRACO" 40LF000FPV2F.
12. ALL 3/4", 1", 1-1/2", & 2" W.M., SHALL BE SDR 9, 200 psi, ASTMD 2737, (BLUE) POLYETHYLENE TUBING.
13. ALL BRASS FITTINGS SHALL BE LEAD FREE.
14. NO GALVANIZED FITTINGS CONNECTED TO BRASS FITTINGS
15. METER BOX SHOULD HAVE A 2'X2'X6' CLEARANCE AROUND IT.

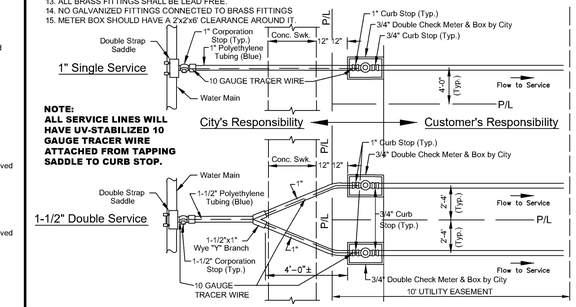

NOTE:
ALL SERVICE LINES WILL HAVE UV-STABILIZED 10 GAUGE TRACER WIRE ATTACHED FROM TAPPING SADDLE TO CURB STOP.

DATE: 11/05/2021 **WATER MAIN SERVICE CONN. WITH SIDEWALK (DBL. CHECK METER)** **W402A**

City of DeLand - Standard Details

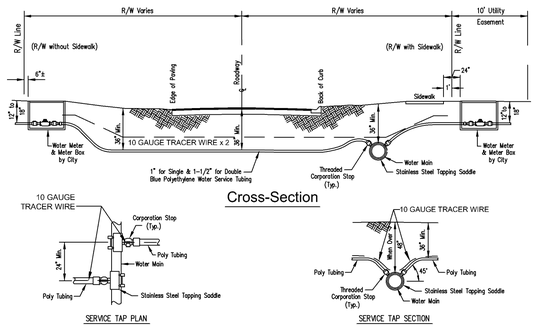

NOTES:
1. SINGLE WATER SERVICE SHALL BE, 1" POLYETHYLENE TUBING (BLUE).
2. DOUBLE WATER SERVICE SHALL BE, 1-1/2" POLYETHYLENE TUBING (BLUE).
3. WATER MAINS TO BE MIN. 36" BELOW GRADE and APPROX. 4' BACK OF CURB.
4. CURB STOP TO BE LOCATED APPROX. 2 FOOT BACK OF RIGHT-OF-WAY AND MUST HAVE LOCK WING.
5. SERVICE LINE TO BE MIN. 36" BELOW GRADE IN RIGHT-OF-WAY.
6. ALL 3/4", 1", 1-1/2" & 2" W.M., SHALL BE SDR 9, 200 psi, ASTMD 2737, (BLUE) POLYETHYLENE TUBING.
7. ALL TRACER WIRE SHALL BE (BLUE) UV-STABILIZED 10 GAUGE. DIRECTIONAL BORES REQUIRED TO HAVE TWO 10 GAUGE WIRES THAT ARE PULLED WITH DIRECTIONAL DRILL. OPEN CUT MAY USE ONLY ONE 10 GAUGE WIRE.
8. ALL SERVICE TAPS TO MEET AWWA STANDARD 45° FROM HORIZONTAL UNLESS PRIOR AUTHORIZATION RECEIVED FROM CITY.
9. ALL SERVICE LINES WILL HAVE TRACER WIRE ATTACHED FROM TAPPING SADDLE TO CURB STOP.

DATE: 11/05/2021 **WATER MAIN SERVICE LINES** **W403**

City of DeLand - Standard Details

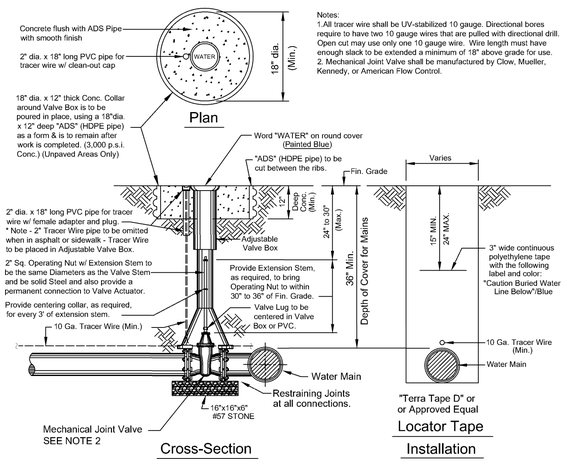

Notes:
1.All tracer wire shall be UV-stabilized 10 gauge. Directional bores require to have two 10 gauge wires that are pulled with directional drill. Open cut may use only one 10 gauge wire. Wire length must have enough slack to be extended a minimum of 18" above grade for use.
2. Mechanical Joint Valve shall be manufactured by Clow, Mueller, Kennedy, or American Flow Control.

DATE: 11/05/2021 **WATER MAIN VALVE SETTING** **W404**

City of Deland - Standard Details

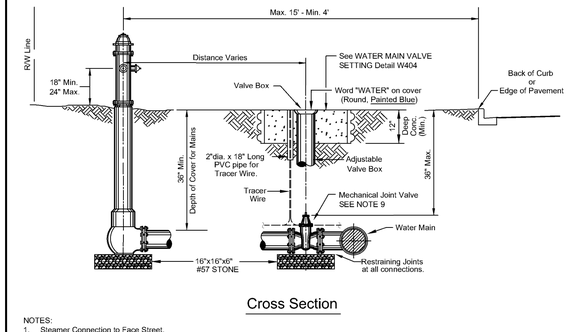

NOTES:
1. Steamer Connection to Face Street.
2. All Fire Hydrants to have 5 1/4" Valve Seat.
3. Fire Hydrants Shall be Placed at Street Corners or in the R.O.W. Adjacent to Side Lot Lines Whenever Possible.
4. See Detail W406 for Typical Connections & Fittings.
5. Fire Hydrants Shall be Painted City Safety Yellow w/Richards Paint No. 1009, Rust Shield Polyurethane.
6. Remove Chains from Cap.
7. Min. 3 ft. Clearance Should be Maintained Around Fire Hydrant for Emergency Operation Purposes.
8. All tracer wire shall be UV-stabilized 10 gauge. Directional bores require to have two 10 gauge wires that are pulled with directional drill. Open cut may use only one 10 gauge wire.
9. Mechanical Joint Valve shall be manufactured by Clow, Mueller, Kennedy, or American Flow Control.

ONLY APPROVED CITY FIRE HYDRANTS
— Mueller Super Centurion 200
— Clow Medallion

See W406 for Plan View

DATE: 11/05/2021 **FIRE HYDRANT SETTING SECTION** **W405**

City of DeLand -Standard Details

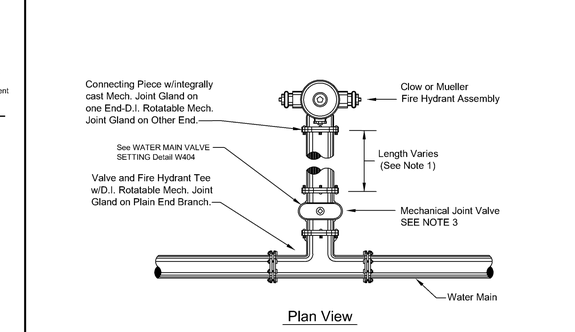

NOTES:
1. On Fire Hydrants Requiring Runout Last Two Joints Must Be Restrained Per Detail W409.
2. Fire Hydrants Should Have a 2'x2'x6' Clearance Around it.
3. Mechanical Joint Valve shall be manufactured by Clow, Mueller, Kennedy, or American Flow Control.

ONLY APPROVED CITY FIRE HYDRANTS
— Mueller Super Centurion 200
— Clow Medallion

See W405 for Cross Section

DATE: 11/05/2021 **FIRE HYDRANT SETTING PLAN** **W406**

City of DeLand - Standard Details

Notes:
1. All tracer wire shall be UV-stabilized 10 gauge. Directional bores require to have two 10 gauge wires that are pulled with directional drill. Open cut may use only one 10 gauge wire.

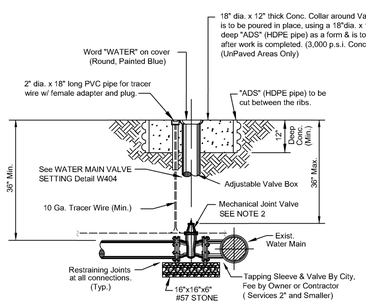

Notes:
1. For Wet Taps larger than 2", Sleeves & Valves will be furnished and installed by the contractor in the presence of the city inspector. Tapping sleeve shall be Ford, Romac, or JCM stainless steel only.
2. Mechanical Joint Valve shall be manufactured by Clow, Mueller, Kennedy, or American Flow Control.

DATE: 11/05/2021 **TAPPING SLEEVE & VALVE** **W407**

City of DeLand - Standard Details

THE FOLLOWING JOINTS MUST BE RESTRAINED IN ALL APPLICATIONS:
1. BEND - INLET AND OUTLET
2. TEE - OUTLET BRANCH
3. OFFSETS - INLET AND OUTLET
4. CAPS
5. PLUGS
6. LAST TWO(2) JOINTS ON A DEAD END RUN (min. 36')
7. LAST TWO(2) JOINTS ON A HYDRANT RUNOUT (min. 36')

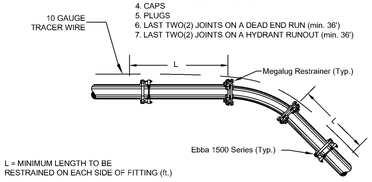

L = MINIMUM LENGTH TO BE RESTRAINED ON EACH SIDE OF FITTING (ft.)

NOM. PIPE SIZE	ELBOWS (deg.)				VALVE TEES
	11.25	22.50	45	90	
4	3	5	8	12	9
6	4	6	10	15	11
8	4	7	13	20	14
10	5	9	15	25	18
12	6	10	17	29	21
14	6	13	26	61	30
16	7	14	28	67	49
18	8	15	31	73	68
20	8	16	33	80	85

NOTE: THRUST RESTRAINT AT FITTINGS AND VALVES SHALL BE BY USE OF EBBA IRON MEGALUG RESTRAINERS. THRUST RESTRAINT BETWEEN PIPE JOINTS SHALL BE BY EBBA IRON SERIES 1500 RESTRAINERS.

DATE: 11/05/2021 **THRUST RESTRAINING DETAIL FOR PVC PIPE** **W408**

City of DeLand - Standard Details

THE FOLLOWING JOINTS MUST BE RESTRAINED IN ALL APPLICATIONS:
1. BEND - INLET AND OUTLET
2. TEE - OUTLET BRANCH
3. OFFSETS - INLET AND OUTLET
4. CAPS
5. PLUGS
6. LAST TWO(2) JOINTS ON A DEAD END RUN (min. 36')
7. LAST TWO(2) JOINTS ON A HYDRANT RUNOUT (min. 36')

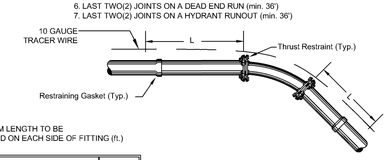

L = MINIMUM LENGTH TO BE RESTRAINED ON EACH SIDE OF FITTING (ft.)

NOM. PIPE SIZE	ELBOWS (deg.)				VALVE TEES
	11.25	22.50	45	90	
4	3	5	8	12	9
6	4	6	10	15	11
8	4	7	13	20	14
10	5	9	15	25	18
12	6	10	17	29	21
16	6	13	26	63	70
18	9	17	36	86	88
20	10	19	39	94	108
24	11	22	45	109	145

NOTE: THRUST RESTRAINT ON SLIPJOINT DUCTILE IRON PIPE SHALL BE U.S. PIPE FIELD LOCK GASKETS FOR TYTON JOINT PIPE or AMERICAN FAST-GRIP GASKETS FOR AMERICAN FASTITE PIPE. THRUST RESTRAINT ON DUCTILE IRON FITTINGS SHALL BE PROVIDED BY THE USE OF MEGALUG RETAINERS AND MECHANICAL JOINT FITTINGS.

DATE: 11/05/2021 **THRUST RESTRAINING DETAIL FOR DUCTILE IRON PIPE** **W409**

City of DeLand - Standard Details

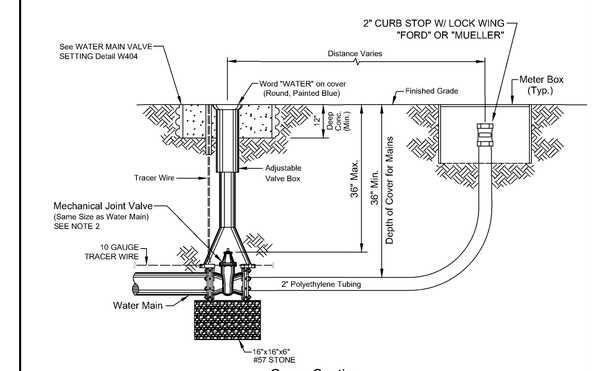

Notes:
1. All tracer wire shall be UV-stabilized 10 gauge. Directional bores require to have two 10 gauge wires that are pulled with directional drill. Open cut may use only one 10 gauge wire.
2. Mechanical Joint Valve shall be manufactured by Clow, Mueller, Kennedy, or American Flow Control.

DATE: 11/05/2021 **WATER MAIN BLOWOFF DETAIL** **W410**

City of DeLand - Standard Details

CITY OF DELAND, FLORIDA
1102 S. GARFIELD AVENUE, DELAND, FLORIDA 32724

DATE: 11/05/2021
CHECKED BY: NAME
NOT TO SCALE
ERIC SAMPSON

TITLE: WATER SYSTEM DETAILS (Sheet 1)

FILE: drive letter/details locations

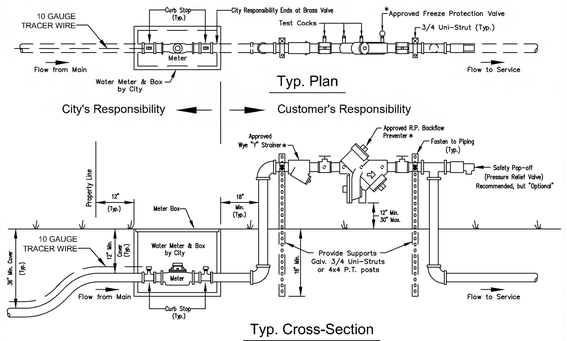

NOTES:
1. Installation Requirements: Above Ground Piping & Fittings shall be Copper or Brass Only (No PVC).
2. Device shall be Properly Supported.
3. Device shall be Protected from Freezing.
4. Freeze protection valve shall be "CONBRACO" 40LF000FPV2F.
5. Device shall be Installed Level, Tested and Certified.
6. Certification of testing shall be placed in Permit Box for inspector's verification.
7. All fittings shall be Lead Free.
8. All corporation stops, shall be "Ford" or "Mueller" only.
9. All installations shall be Approved by the City Inspector.
10. All tracer wire shall be UV-stabilized 10 gauge. Directional bores require to have two 10 gauge wires that are pulled with directional drill. Open cut may use only one 10 gauge wire.

*APPROVED REDUCED PRESSURE DEVICE
"Wilkins" 975XL2
"Watts" LF919-QT

*APPROVED FREEZE PROTECTION VALVE
"Conbraco" (Apollo) 40LF000FPV2F

*APPROVED WYE "Y" STRAINER
"Conbraco" (Apollo) #YB34LF, #YB1LF, #YB114LF, #YB112LF, #YB2LF

DATE: 11/05/2021 **WATER METER & BACKFLOW ASSEMBLY - 1" THRU 2-1/2" MODELS** **W411**

City of DeLand - Standard Details

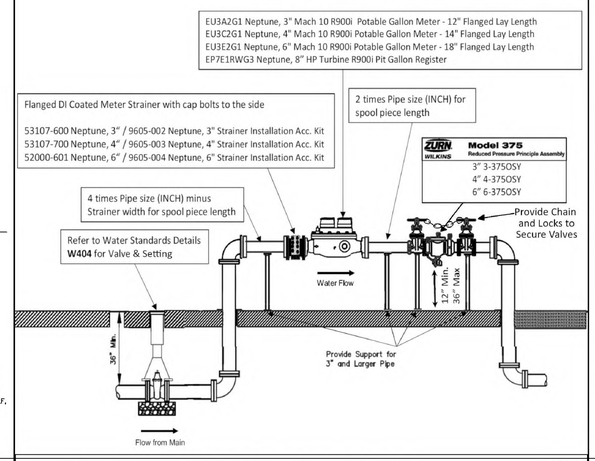

DATE: 11/05/2021 **3" AND ABOVE POTABLE WATER METER SET** **W412**

City of DeLand - Standard Details

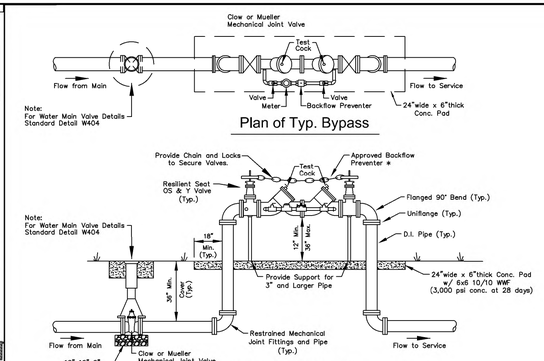

NOTES:
1. OS & Y Valve Handles will be Chained and Locked.
2. Meter Sets will be Pointed after Installation.
3. Bypass Pipe & Fittings shall be Threaded Brass, Copper or Ductile Iron. (No PVC).
4. Installation Requirements: No P.V.C. Piping above Ground.
5. Device shall be Properly Supported.
6. Device shall be Protected from Freezing.
7. All Installations shall be Approved by City Engineer.
8. Device shall be Installed Level, Tested and Certified.
9. Certification of testing shall be placed in Permit Box for Inspector's verification.
9. Consult local Fire Authority for location site & requirements for Fire Dept. connections.
10. All fittings shall be Lead Free.
11. All concrete shall have a minimum strength of 3,000 psi at 28 days.

*APPROVED R.P. DEVICES
Wilkins 975XL2
Watts Model LF909 or LF009
Conbraco 40LF-200-03

*APPROVED DOUBLE-CHECK VALVES
Wilkins 350A
Watts Model LF709 or LF007
Conbraco 40LF-100-03

DATE: 11/05/2021 **DOUBLE DETECTOR CHECK VALVE ASSEMBLY - 4" THRU 12"** **W413**

City of DeLand - Standard Details

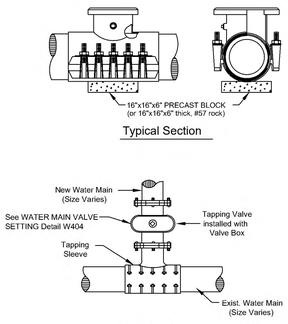

NOTES:
1. ALL TAPPING SLEEVES ABOVE 2" IN DIA. SHALL BE STAINLESS STEEL ONLY.
2. INSTALL REQUIRED RESTRAINED JOINTS. IN NO INSTANCE SHALL THRUST BLOCKS BE PERMITTED.
3. ONLY ROMAC INDUSTRIES, FORD STAINLESS STEEL OR JCM STAINLESS STEEL TAPPING SLEEVES ARE TO BE USED.
4. IN NEW CONSTRUCTION, ALL SADDLES, SLEEVES, VALVES, CORPORATION & CURB STOPS, TUBING WILL BE FURNISHED BY THE CONTRACTOR.

DATE: 11/05/2021 **STAINLESS STEEL TAPPING SLEEVE** **W414**

City of DeLand - Standard Details

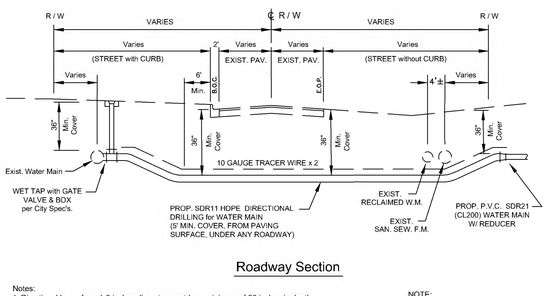

Notes:
1. Directional bores from 1-3 inches diameter must be a minimum of 36 inches in depth below edge of pavement.
2. Directional bores, 4 inches or greater, must be 10 times the diameter of the bore/backreamer, whichever diameter is greater, in depth, below edge of pavement and to extend a minimum of 6 feet beyond the edge of pavement, either side.
3. Any/All directional bore affiliated drill mud/slurry must be cleaned/reclaimed from right of way/bore pits and disposed of on approved off-site location.
4. All tracer wire shall be UV-stabilized 10 gauge. Directional bores require to have two 10 gauge wires that are pulled with directional drill. Open cut may use only one 10 gauge wire.

NOTE:
Tie Exist. Water Service Lines into New Water Main as per City Specifications.

DATE: 11/05/2021 **DIRECTIONAL BORE** **W415**

City of DeLand - Standard Details

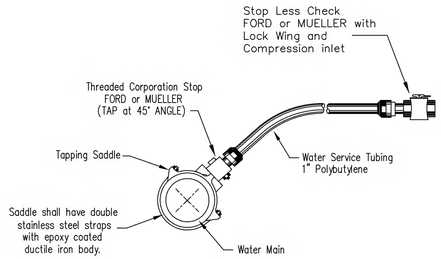

DATE: 11/05/2021 **CHLORINATION TAP** **W416**

City of DeLand - Standard Details

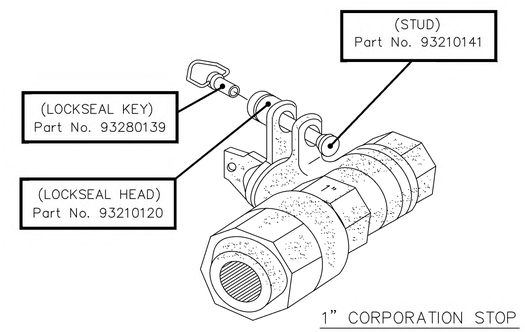

NOTE:
ALL SERVICE LINE WHIPS SHALL BE BULLET LOCKED ***OFF*** BY THE CONTRACTOR AFTER INSTALLATION AND SAMPLING HAVE BEEN COMPLETED

Manufacturer:
"FIROMATIC LOCKSEAL"

DATE: 11/05/2021 **WATER METER LOCKSEAL ASSEMBLY** **W418**

City of DeLand - Standard Details

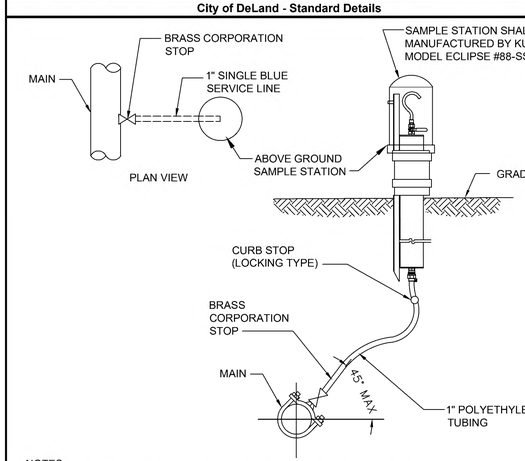

NOTES:
1. A 1 INCH SAMPLE STATION INSTALLED AT THE END OF A CUL-DE-SAC CAN ALSO SERVE AS A BLOW -OFF VALVE WHEN BOTH ARE REQUIRED.

DATE: 11/05/2021 **WATER SAMPLE STATION** **W419**

City of DeLand - Standard Details

LOCATION OF PUBLIC WATER SYSTEM MAINS IN ACCORDANCE WITH F.A.C. RULE 62-555.314

Other pipe	Horizontal Separation	Crossings (1)	Joint Spacing @ Crossing (Full Joint Centered)
Storm Sewer Stormwater Force Main, Reclaimed Water (2)	WATER MAIN 3 ft. minimum	WATER MAIN 12 inches is the minimum except for storm sewer,then 6 inches is the minimum and 12 inches is preferred	Alternate 3' ft. minimum WATER MAIN
Vacuum Sanitary Sewer	WATER MAIN 10 ft. preferred 3 ft. minimum	WATER MAIN 12 inches preferred 6 inches minimum	Alternate 3' ft. minimum WATER MAIN
Gravity Sewer Sanitary Sewer, Sanitary Sewer Force Main, Reclaimed Water (4)	WATER MAIN 10 ft. preferred 6 ft. minimum (3)	WATER MAIN 12 inches is the minimum except for gravity sewer,then 6 inches is the minimum and 12 inches is preferred	Alternate 6' ft. minimum WATER MAIN
On-Site Sewage Treatment & Disposal System(4)	10 ft minimum	---	---

(1) Water Main Should Cross Above other pipe. When Water Main Must Be Below Other Pipe,the Minimum Separation is 12" inches.
(2) Reclaimed Water Regulated Under Part III of chapter 62-610, F.A.C.
(3) 3 ft. for Gravity Sanitary sewer where the Bottom of the Water Main is laid at least 6 inches above the top of gravity sanitary sewer.
(4) Reclaimed water not regulated under Part III of Chapter 62-160, F.A.C.

DATE: 11/05/2021 **WATER PIPE SEPERATION REQUIREMENTS** **W420**

City of DeLand - Standard Details

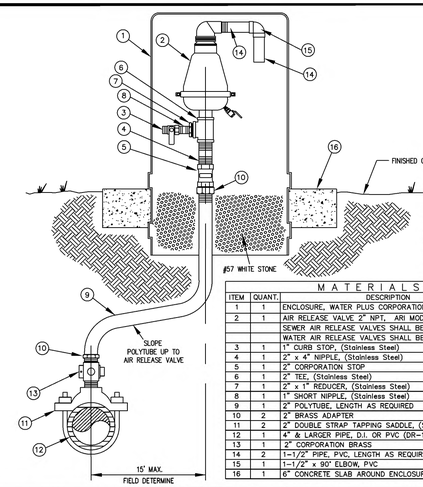

NOTE: (1) VENTED ENCLOSURE TO BE COLOR CODED AS FOLLOWS:
WATER MAIN - BLUE
FORCE MAIN - GREEN
REUSE MAIN - PURPLE (PANTONE 522C)

M A T E R I A L S

ITEM	QUANT.	DESCRIPTION
1	1	ENCLOSURE, WATER PLUS CORPORATION MODEL #131632
2	1	AIR RELEASE VALVE 2" NPT, ARI MODEL D-025 P SEWER AIR RELEASE VALVES SHALL BE ARI MODEL D-025 P WATER AIR RELEASE VALVES SHALL BE VALMATIC OR EQUAL
3	1	1" CURB STOP, (Stainless Steel)
4	1	2" x 4" NIPPLE, (Stainless Steel)
5	1	2" CORPORATION STOP
6	1	2" TEE, (Stainless Steel)
7	1	2" x 1" REDUCER, (Stainless Steel)
8	1	1" SHORT NIPPLE, (Stainless Steel)
9	1	2" POLYTUBE, LENGTH AS REQUIRED
10	2	2" BRASS ADAPTER
11	2	2" DOUBLE STRAP TAPPING SADDLE, (Stainless Steel)
12	1	4" & LARGER PIPE, D.I. OR PVC (DR-18)
13	1	2" CORPORATION BRASS
14	2	1-1/2" PIPE, PVC, LENGTH AS REQUIRED
15	1	1-1/2" x 90° ELBOW, PVC
16	1	6" CONCRETE SLAB AROUND ENCLOSURE

DATE: 11/05/2021 **OFFSET AIR RELEASE VALVE** **W421**

City of DeLand - Standard Details

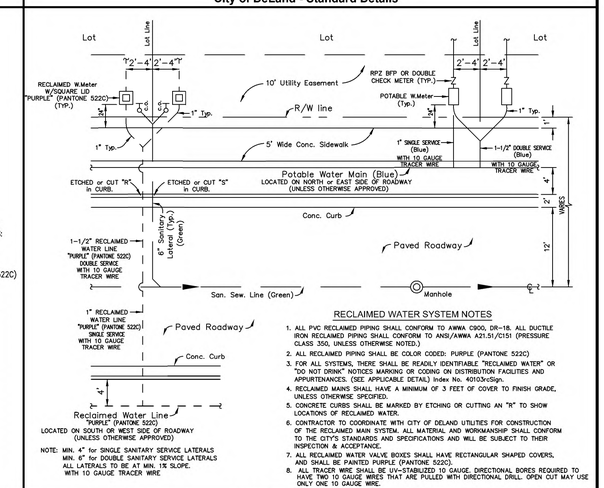

RECLAIMED WATER SYSTEM NOTES
1. ALL PVC RECLAIMED PIPING SHALL CONFORM TO AWWA C900, DR-18, ALL DUCTILE IRON RECLAIMED PIPING SHALL CONFORM TO ANSI/AWWA A21.51/C151 (PRESSURE CLASS 350, UNLESS OTHERWISE NOTED.)
2. ALL RECLAIMED PIPING SHALL BE COLOR CODED: PURPLE (PANTONE 522C)
3. FOR ALL SYSTEMS, THERE SHALL BE READILY IDENTIFIABLE "RECLAIMED WATER" OR "DO NOT DRINK" NOTICES MARKING OR CODING ON DISTRIBUTION FACILITIES AND APPURTENANCES. (SEE APPLICABLE DETAIL) Index No. 4010Sx-Sign.
4. RECLAIMED MAINS SHALL HAVE A MINIMUM OF 3 FEET OF COVER TO FINISH GRADE, UNLESS OTHERWISE SPECIFIED.
5. CONCRETE CURBS SHALL BE MARKED BY ETCHING OR CUTTING AN "R" TO SHOW LOCATIONS OF RECLAIMED WATER.
6. CONTRACTOR TO COORDINATE WITH CITY OF DELAND UTILITIES FOR CONSTRUCTION OF THE RECLAIMED MAIN SYSTEM. ALL MATERIAL AND WORKMANSHIP SHALL CONFORM TO THE CITY'S STANDARDS AND SPECIFICATIONS AND WILL BE SUBJECT TO THEIR INSPECTION & ACCEPTANCE.
7. ALL RECLAIMED WATER VALVE BOXES SHALL HAVE RECTANGULAR SHAPED COVERS, AND SHALL BE PAINTED PURPLE (PANTONE 522C).
8. ALL TRACER WIRE SHALL BE UV-STABILIZED 10 GAUGE. DIRECTIONAL BORES REQUIRED TO HAVE TWO 10 GAUGE WIRES THAT ARE PULLED WITH DIRECTIONAL DRILL. OPEN CUT MAY USE ONLY ONE 10 GAUGE WIRE.

DATE: 11/05/2021 **RESIDENTIAL UTILITY LAYOUT** **W422**

City of DeLand - Standard Details

CITY OF DELAND, FLORIDA
1102 S. GARFIELD AVENUE, DELAND, FLORIDA 32724

DATE: 11/05/2021
CHECKED BY: NAME
SCALE: NOT TO SCALE
DRAWN BY: ERIC SAMPSON

TITLE: WATER SYSTEM DETAILS (Sheet 2)

FILE: drive letter/details locations

GENERAL NOTES:

1. The side panels are dimensionally symmetric, and may be used on either side of the structure.
2. Two (2) skimmers may be installed on a single structure provided they are constructed on opposite ends.
3. The width of the front panel (dimension W) is equal to the same as the outside dimension across the front of the structure.
4. Hot dip galvanize the front panel, side panels, and flat bars after fabrication.
5. The location of the reinforcing steel in these structures must conform to the Index 425-052 to avoid conflict with the expansion anchors used to attach the skimmer.
6. Use grates on the inlets unless otherwise specified in the Plans.
7. A skimmer consists of two (2) side panels, one front panel, two (2) flat bars, and accessory hardware.

TABLE OF CONTENTS:

Sheet	Description
1	General Notes and Contents
2	Panel and Flat Bar Details
3	Installation Details

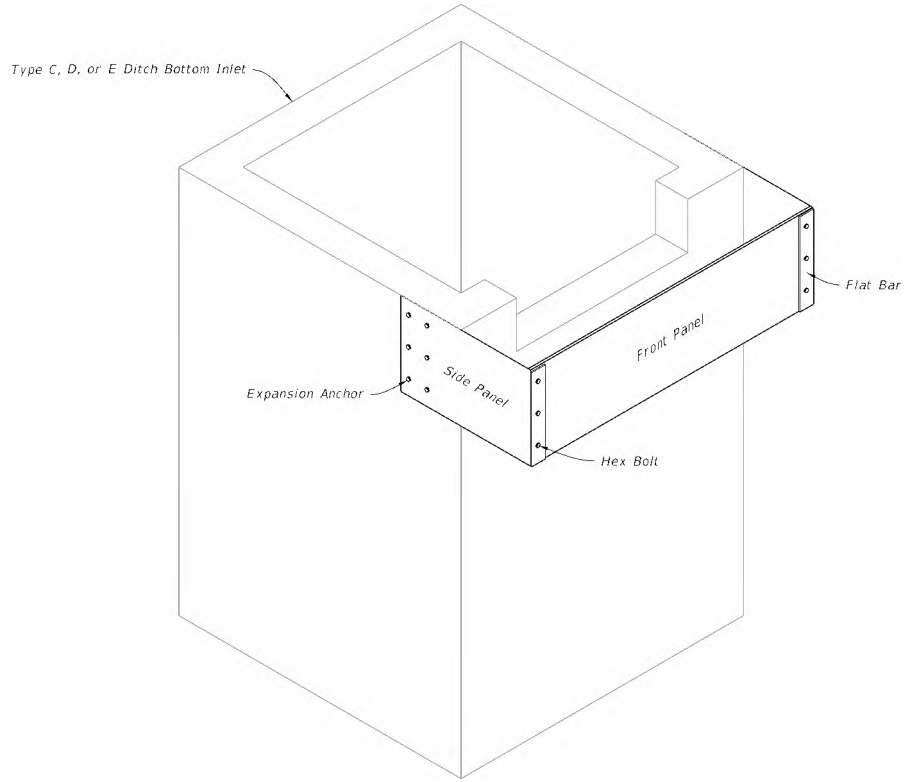

SKIMMER

10/6/2022 1:31:29 PM

LAST REVISION	REVISION	DESCRIPTION:			INDEX	SHEET
10/01/20			FY 2023-24 STANDARD PLANS	SKIMMER FOR OUTLET CONTROL STRUCTURES	425-070	1 of 3

DIMENSIONS				
Skimmer Height as Specified in the Plans				Bolt Spacing
H (in.)	D (in.)	E (in.)	L (in.)	S (in.)
12	3 3/16	3	28	3
14	3 3/16	3	28	4
16	3 3/16	3	28	5
18	3 3/16	3	28	6
20	4 3/16	4	31	6
22	4 3/16	4	31	7
24	4 3/16	4	31	8
26	4 3/16	4	31	9
28	4 3/16	4	31	10
30	5 3/16	5	31	10
32	5 3/16	5	31	11
34	5 3/16	5	31	12
36	6 3/16	6	31	12
38	6 3/16	6	31	13
40	6 3/16	6	31	14

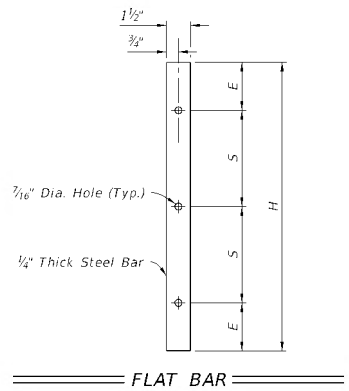

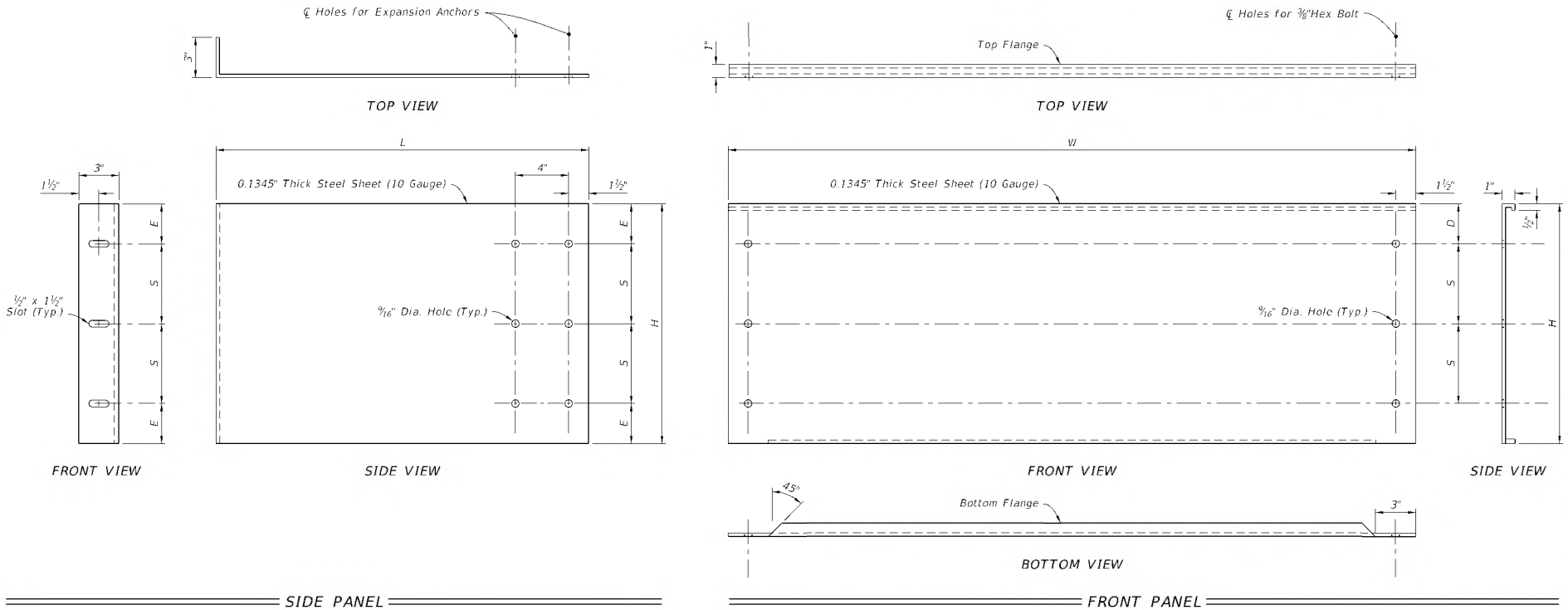

PANEL AND FLAT BAR DETAILS

LAST REVISION	REVISION	DESCRIPTION:			INDEX	SHEET
10/01/20			FY 2023-24 STANDARD PLANS	SKIMMER FOR OUTLET CONTROL STRUCTURES	425-070	2 of 3

10/06/2022 1:31:30 PM

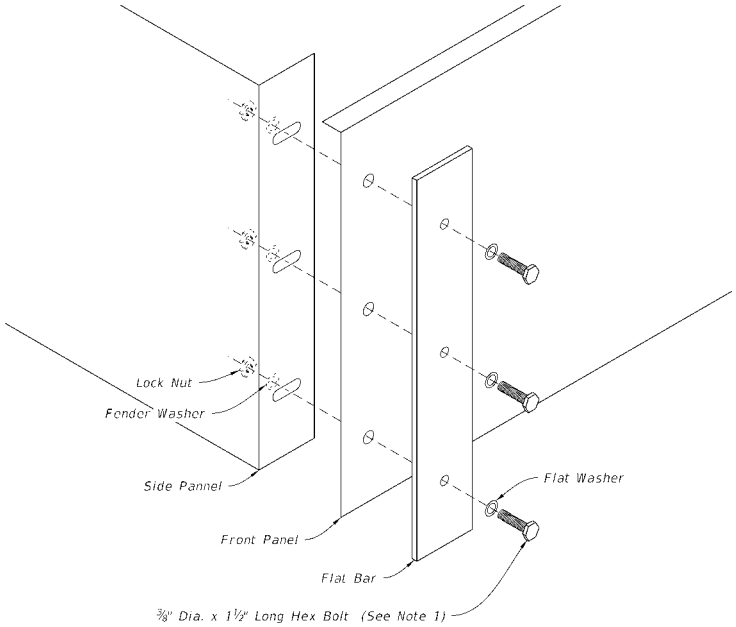

DETAIL "A"

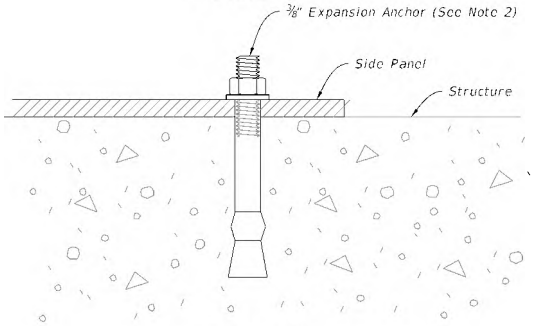

DETAIL "B"

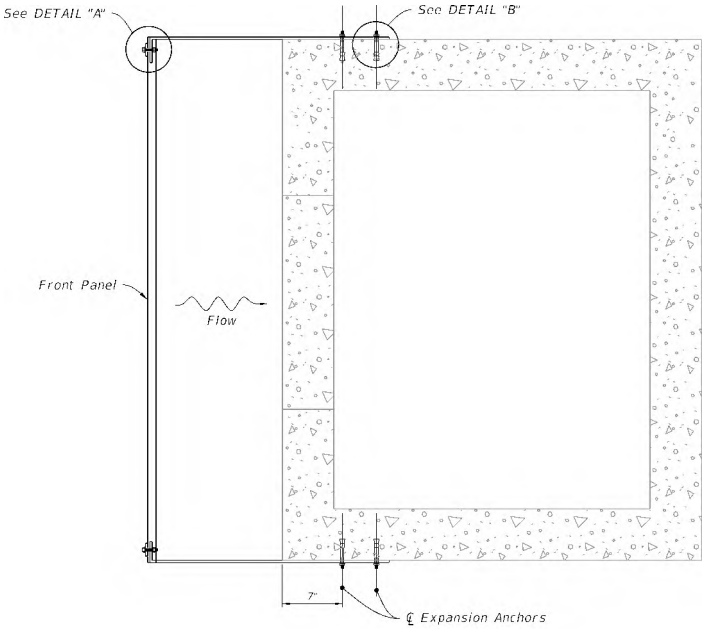

PLAN

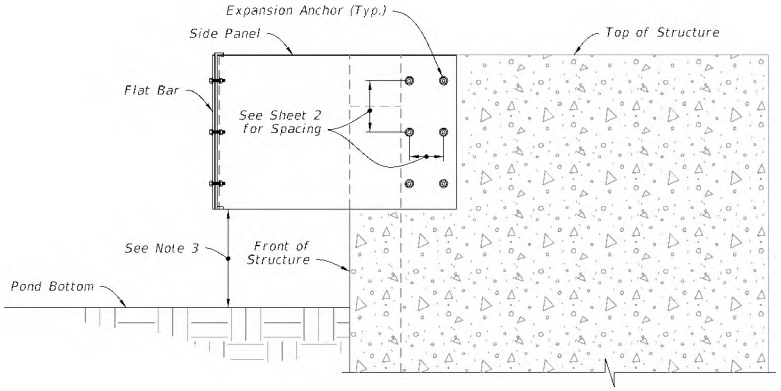

SIDE ELEVATION

NOTES:

1. Hex Bolt, Flat Washer, Fender Washer, And Lock Nut, all Stainless Steel. (6 Required Per Skimmer)
2. Install a stainless steel stud type expansion anchor with nut and washer. Embedment depth = 2½". Anchors to be installed according to the manufacturer's recommendations (12 required per skimmer).
3. Install the skimmer so that the distance between the pond bottom at the structure and the skimmer is not less than 1 foot.

INSTALLATION DETAILS

LAST REVISION	REVISION	DESCRIPTION:				INDEX	SHEET
10/01/20			FDOT	FY 2023-24 STANDARD PLANS	SKIMMER FOR OUTLET CONTROL STRUCTURES	425-070	3 of 3

10/06/2022 1:31:32 PM

NOTES:
1. RECLAIM MAINS TO BE ON SOUTH or WEST SIDE OF R.O.W., APPROX. 4 FT. BACK OF CURB UNLESS OTHERWISE AUTHORIZED BY CITY ENGINEER.
2. SERVICE CONNECTIONS TO BE 4 FT. FROM SIDE LOT LINE ON EITHER SIDE OF LOT. THESE SERVICES TO BE CONSISTENT WITHIN THE SUBDIVISION. DRIVEWAYS SHALL NOT BE BUILT OVER METERS.
3. ALL LINES SHALL BE PRESSURE TESTED (TEST FOR TWO HOURS @ 150 P.S.I.) UNDER THE DIRECTION OF THE UTILITIES DEPARTMENT. AFTER SUCCESSFUL COMPLETION OF THE TESTING, THE PRESSURE SHALL REMAIN ON THE SYSTEM AT ALL TIMES.
4. TEN FT. SEPARATION REQUIRED BETWEEN PARALLEL WATER & SANITARY SEWER LINES.
5. SADDLE IS REQUIRED FOR ALL SERVICE CONNECTIONS TO 4" PVC MAINS. SADDLE IS REQUIRED FOR 2" SERVICE CONNECTIONS TO 6" and LARGER PVC MAINS. LARGEST SERVICE CONNECTION TO A 4" MAIN IS MIN. 1-1/2" and LARGEST TO ANY MAIN IS 2".
6. MINIMUM DISTANCE BETWEEN SERVICE TAPS TO BE NOT LESS THAN 36".
7. SINGLE SERVICE TAP SHALL BE 1".
8. DOUBLE SERVICE TAP SHALL BE 1-1/ 2".
9. ALL FITTINGS SHALL BE BRASS ONLY.
10. ALL CORPORATION STOPS, SHALL BE "FORD" OR "MUELLER" ONLY.
11. ALL 3/4", 1", 1-1/2", & 2" W.M., SHALL BE SDR 9, 200 psi, ASTMD 2737, (PURPLE) POLYETHYLENE TUBING.
12. ALL BRASS FITTINGS SHALL BE LEAD FREE.
13. NO GALVANIZED FITTINGS CONNECTED TO BRASS FITTINGS.
14. PLANTINGS AND OBSTRUCTIONS SHOULD BE AVOIDED WITHIN 3 FT. RADIUS FOR SERVICE ACTIVITY.
15. METER BOX SHOULD HAVE A 2'x2'x6' CLEARANCE AROUND IT.

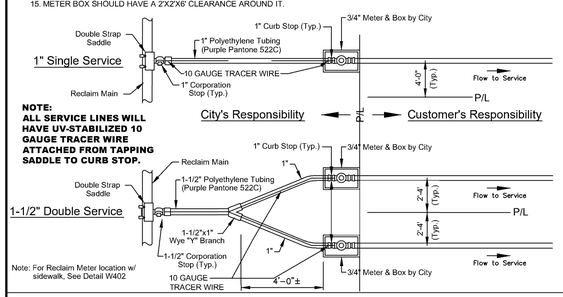

NOTE:
ALL SERVICE LINES WILL HAVE UV-STABILIZED 10 GAUGE TRACER WIRE ATTACHED FROM TAPPING SADDLE TO CURB STOP.

DATE: 11/05/2021 **RECLAIM MAIN SERVICE CONNECTION** R401
City of DeLand - Standard Details

NOTES:
1. RECLAIM MAINS TO BE ON SOUTH or WEST SIDE OF R.O.W., APPROX. 4 FT. BACK OF CURB UNLESS OTHERWISE AUTHORIZED BY CITY ENGINEER.
2. SERVICE CONNECTIONS TO BE 4 FT. FROM SIDE LOT LINE ON EITHER SIDE OF LOT. THESE SERVICES TO BE CONSISTENT WITHIN THE SUBDIVISION. DRIVEWAYS SHALL NOT BE BUILT OVER METERS.
3. ALL LINES SHALL BE PRESSURE TESTED (TEST FOR TWO HOURS @ 150 P.S.I.) UNDER THE DIRECTION OF THE UTILITIES DEPARTMENT. AFTER SUCCESSFUL COMPLETION OF THE TESTING, THE PRESSURE SHALL REMAIN ON THE SYSTEM AT ALL TIMES.
4. TEN FT. SEPARATION REQUIRED BETWEEN PARALLEL WATER & SANITARY SEWER LINES.
5. SADDLE IS REQUIRED FOR ALL SERVICE CONNECTIONS TO 4" PVC MAINS. SADDLE IS REQUIRED FOR 2" SERVICE CONNECTIONS TO 6" and LARGER PVC MAINS. LARGEST SERVICE CONNECTION TO A 4" MAIN IS MIN. 1-1/2" and LARGEST TO ANY MAIN IS 2".
6. MINIMUM DISTANCE BETWEEN SERVICE TAPS TO BE NOT LESS THAN 36".
7. SINGLE SERVICE TAP SHALL BE 1".
8. DOUBLE SERVICE TAP SHALL BE 1-1/ 2".
9. ALL FITTINGS SHALL BE BRASS ONLY.
10. ALL CORPORATION STOPS, SHALL BE "FORD" OR "MUELLER" ONLY.
11. ALL 3/4", 1", 1-1/2", & 2" W.M., SHALL BE SDR 9, 200 psi, ASTMD 2737, (PURPLE) POLYETHYLENE TUBING.
12. ALL BRASS FITTINGS SHALL BE LEAD FREE.
13. NO GALVANIZED FITTINGS CONNECTED TO BRASS FITTINGS
14. METER BOX SHOULD HAVE A 2'x2'x6' CLEARANCE AROUND IT.

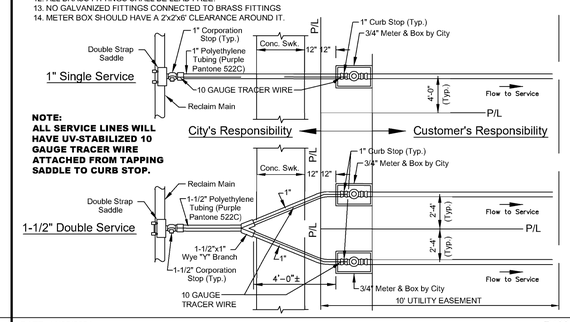

NOTE:
ALL SERVICE LINES WILL HAVE UV-STABILIZED 10 GAUGE TRACER WIRE ATTACHED FROM TAPPING SADDLE TO CURB STOP.

DATE: 11/05/2021 **RECLAIM MAIN SERVICE CONN. WITH SIDEWALK** R402
City of DeLand - Standard Details

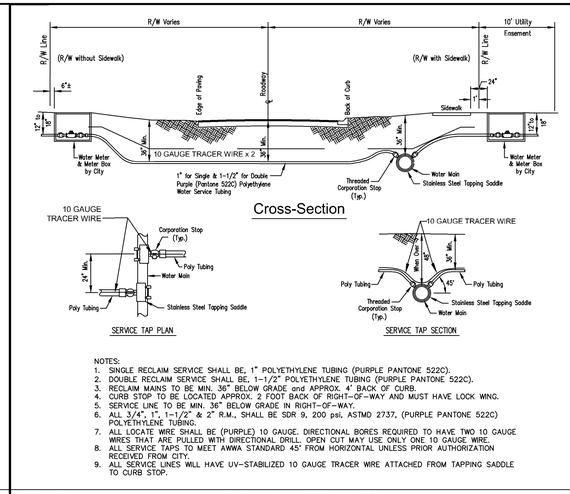

NOTES:
1. SINGLE RECLAIM SERVICE SHALL BE, 1" POLYETHYLENE TUBING (PURPLE PANTONE 522C).
2. DOUBLE RECLAIM SERVICE SHALL BE, 1-1/2" POLYETHYLENE TUBING (PURPLE PANTONE 522C).
3. RECLAIM MAINS TO BE MIN. 36" BELOW GRADE and APPROX. 4' BACK OF CURB.
4. CURB STOP TO BE LOCATED APPROX. 2 FOOT BACK OF RIGHT-OF-WAY AND MUST HAVE LOCK WNG.
5. SERVICE LINE TO BE MIN. 36" BELOW GRADE IN RIGHT-OF-WAY.
6. ALL 3/4", 1", 1-1/2", & 2" R.M., SHALL BE SDR 9, 200 psi, ASTMD 2737, (PURPLE PANTONE 522C) POLYETHYLENE TUBING.
7. ALL LOCATE WIRE SHALL BE (PURPLE) 10 GAUGE. DIRECTIONAL BORES REQUIRED TO HAVE TWO 10 GAUGE WIRES THAT ARE PULLED WITH DIRECTIONAL DRILL. OPEN CUT MAY USE ONLY ONE 10 GAUGE WIRE.
8. ALL SERVICE TAPS TO MEET AWWA STANDARD 45° FROM HORIZONTAL UNLESS PRIOR AUTHORIZATION RECEIVED FROM CITY.
9. ALL SERVICE LINES WILL HAVE UV-STABILIZED 10 GAUGE TRACER WIRE ATTACHED FROM TAPPING SADDLE TO CURB STOP.

DATE: 11/05/2021 **RECLAIM MAIN SERVICE LINES** R403
City of DeLand - Standard Details

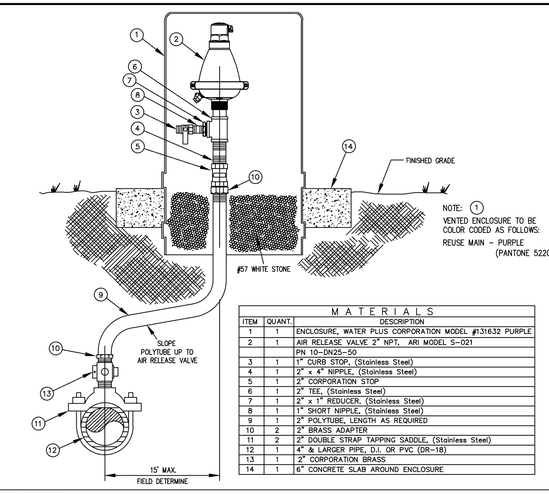

ITEM	QUANT.	MATERIALS DESCRIPTION
1	1	ENCLOSURE, WATER PLUS CORPORATION MODEL #131632 PURPLE
2	1	AIR RELEASE VALVE 2" NPT, ARI MODEL S-021 PN 10-DN25-50
3	1	1" CURB STOP, (Stainless Steel)
4	1	2" x 4" NIPPLE, (Stainless Steel)
5	1	2" CORPORATION STOP
6	1	2" TEE, (Stainless Steel)
7	1	2" x 1" REDUCER, (Stainless Steel)
8	1	1" SHORT NIPPLE, (Stainless Steel)
9	1	2" POLYTUBE, LENGTH AS REQUIRED
10	2	2" BRASS ADAPTER
11	2	2" DOUBLE STRAP TAPPING SADDLE, (Stainless Steel)
12	1	4" & LARGER PIPE, D.I. OR PVC (DR-18)
13	1	2" CORPORATION BRASS
14	1	6" CONCRETE SLAB AROUND ENCLOSURE

DATE: 11/05/2021 **OFFSET AIR RELEASE VALVE** R421
City of DeLand - Standard Details

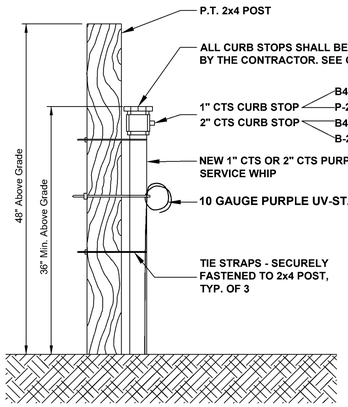

DATE: 11/05/2021 **NEW REUSE SERVICE WHIP** R426
City of DeLand - Standard Details

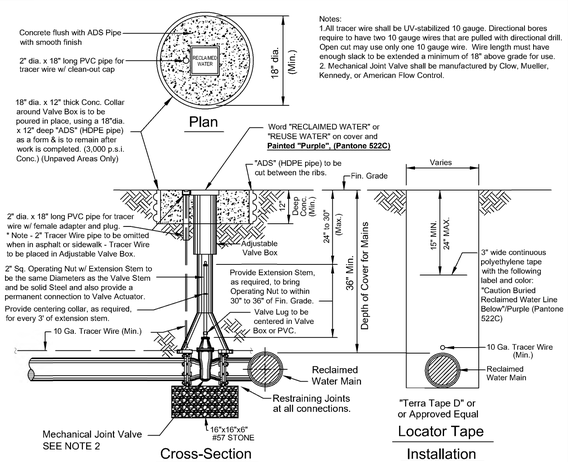

Notes:
1.All tracer wire shall be UV-stabilized 10 gauge. Directional bores require to have two 10 gauge wires that are pulled with directional drill. Open cut may use only one 10 gauge wire. Wire length must have enough slack to be extended a minimum of 18" above grade for use.
2. Mechanical Joint Valve shall be manufactured by Clow, Mueller, Kennedy, or American Flow Control.

DATE: 11/05/2021 **RECLAIMED WATER VALVE SETTING** R450
City of Deland - Standard Details

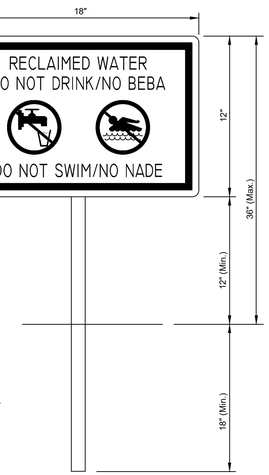

NOTES:
1. Sign background shall be white, letters shall be black (Hellvetica, Swiss 721, corel, or acceptable equal) and border shall be Pantone Purple 522C.
2. Height of sign will depend on location and surrounding landscape plant types. In all cases, the sign shall visable to the public.
3. Engineering grade refective materials shall be used for sign.
4. Sign materials shall be of 0.040 gauge metal.
5. Sign post shall be 2-3/8" OD steel pipe, hot dip galvanized per ASTM A-123, post to be provided by customer.
6. Mounting hardware shall be stainless steel.
7. Signs shall be place by the contractor in accordance with the City approved plans and/ or as approved by the City. (e.g.) Sign should be posted by entrance to subdivision, storage ponds, irrigation pumps, gate entrances to school facility or game fields, and first and ninth Tees at Golf courses.
8. Public notification should occur in HOA document and City Reclaimed Water Brochure with meter application.

DATE: 11/05/2021 **RECLAIMED WATER SIGNAGE** R451
City of DeLand - Standard Details

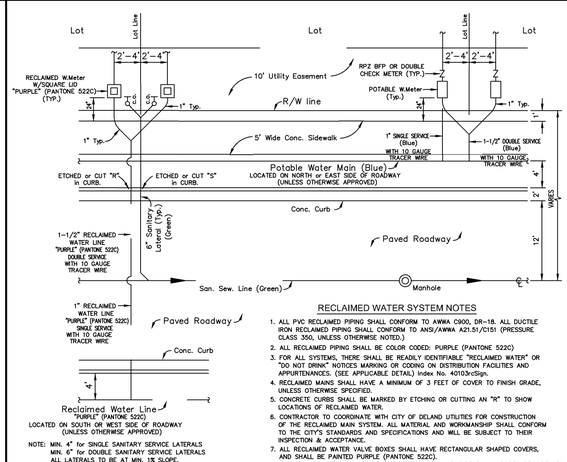

RECLAIMED WATER SYSTEM NOTES
1. ALL PVC RECLAIMED PIPING SHALL CONFORM TO AWWA C900, DR-18. ALL DUCTILE IRON RECLAIMED PIPING SHALL CONFORM TO ANSI/AWWA A21.51/C151 (PRESSURE CLASS 350, UNLESS OTHERWISE NOTED.)
2. ALL RECLAIMED PIPING SHALL BE COLOR CODED: PURPLE (PANTONE 522C)
3. FOR ALL SYSTEMS, THERE SHALL BE READILY IDENTIFIABLE "RECLAIMED WATER" OR "DO NOT DRINK" NOTICES MARKING OR CODING ON DISTRIBUTION FACILITIES AND APPURTENANCES. (SEE APPLICABLE DETAIL) Index No. 40103xcSign.
4. RECLAIMED MAINS SHALL HAVE A MINIMUM OF 3 FEET OF COVER TO FINISH GRADE, UNLESS OTHERWISE SPECIFIED.
5. CONCRETE CURBS SHALL BE MARKED BY ETCHING OR CUTTING AN "R" TO SHOW LOCATIONS OF RECLAIMED WATER.
6. CONTRACTOR TO COORDINATE WITH CITY OF DELAND UTILITIES FOR CONSTRUCTION OF THE RECLAIMED MAIN SYSTEM. ALL MATERIAL AND WORKMANSHIP SHALL CONFORM TO THE CITY'S STANDARDS AND SPECIFICATIONS AND WILL BE SUBJECT TO THEIR INSPECTION & ACCEPTANCE.
7. ALL RECLAIMED WATER VALVE BOXES SHALL HAVE RECTANGULAR SHAPED COVERS, AND SHALL BE PAINTED PURPLE (PANTONE 522C).
8. ALL TRACER WIRE SHALL BE UV-STABILIZED 10 GAUGE. DIRECTIONAL BORES REQUIRED TO HAVE TWO 10 GAUGE WIRES THAT ARE PULLED WITH DIRECTIONAL DRILL. OPEN CUT MAY USE ONLY ONE 10 GAUGE WIRE.

DATE: 11/05/2021 **RECLAIMED WATER SYSTEM LAYOUT** R452
City of DeLand - Standard Details

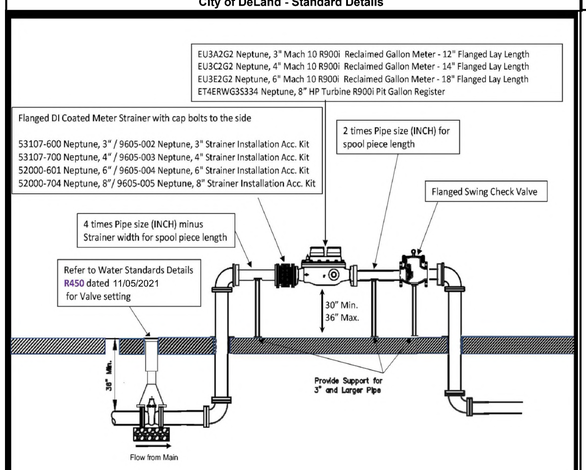

DATE: 11/05/2021 **3" AND ABOVE RECLAIMED METER SET** R453
City of DeLand - Standard Details

1. THE CITY OF DeLand's UTILITIES DEPARTMENT (386-626-7250) SHALL BE GIVEN A MINIMUM OF 48 HOURS ADVANCE NOTICE (NOT INCLUDING HOLIDAYS OR WEEKENDS) PRIOR TO the BEGINNING OF ANY RECLAIMED WATER SYSTEM CONSTRUCTION.
2. DEWATERING SHALL BE PROVIDED TO KEEP GROUNDWATER ELEVATION A MINIMUM OF 6 INCHES BELOW PROPSED RECLAIMED WATER MAIN.
3. ALL RECLAIMED WATER MAINS SHALL BE LAID ON A FIRM FOUNDATION WITH ALL UNSUITABLE MATERIAL (MUCK, ROCK, COQUINA, ETC.) REMOVED AND REPLACED WITH CLEAN GRANULAR MATERIAL.
4. TRENCHES SHALL BE BACKFILLED WITH MATERIAL ACCEPTABLE TO THE CITY WITH A MINIMUM COMPACTION OF 95% IN UNPAVED AREAS AND 98% IN PAVED AREAS IN ACCORDANCE WITH AASHTO T-180.
5. IT SHALL BE THE CONTRACTORS RESPONSIBILITY TO ENSURE THAT TRENCH COMPACTION TESTS ARE PROVIDED AT POINTS 1 FOOT ABOVE THE PIPE AND AT 1 FOOT VERTICAL INTERVALS TO FINISH GRADE, AT A MINIMUM SPACING OF EVERY 300 FEET
6. 3" METALLIZED PIPE LOCATION TAPE SHALL BE LOCATED BETWEEN 15" AND 24" BELOW FINISHED GRADE OR AS SPECIFIED BY MANUFACTURER FOR ALL PVC LINES. MARKER TAPE SHALL BE PROVIDED ON ALL DIPS AS WELL.
7. ALL SINGLE RESIDENTIAL RECLAIMED WATER SERVICES SHALL BE 1" AND DOUBLE RESIDENTIAL SERVICES SHALL BE 1-1/2". SERVICES SHALL BE CTS 3408 HIGH DENSITY POLYETHYLENE TUBING RATED FOR A MINIMUM OF 200 PSI WITH SDR 9 (CTS). THE TUBING SHALL HAVE A VIRGIN HIGH DENSITY POLYETHYLENE CENTER FOR WHICH THE MANUFACTURER SHALL FURNISH A CERTIFICATE OF PURITY. THE TUBING SHALL BE "PURPLE" (PANTONE) IN COLOR AND SHALL HAVE THE WORDS "RECLAIMED WATER" PERMANENTLY PRINTED ON THE OUTSIDE. THE TUBING SHALL HAVE U.V. PROTECTION AND SHALL NOT BE AFFECTED BY DIRECT SUNLIGHT. THE TUBING SHALL COMPLY WITH OR EXCEED THE APPLICABLE STANDARDS OF A.S.D.M. D1248, D3350, D2239, D2737, N.S.F.-14 AND A.W.W.A. C901 AND SHALL COME WITH A LIFETIME WARRANTY. APPROVED SIZES: 1", 1-1/2" AND 2" DIAMETERS. ACCEPTABLE MANUFACTURERS: ENDOT ENDOCORE RWT OR APPROVED EQUAL
8. REFER TO "NEW POTABLE AND REUSE SERVICE WHIP" R426.
9. RECLAIMED WATER VALVES SHALL BE PLACED AT ALL STREET INTERSECTIONS AND AT MAXIMUM SPACING OF 1,000 FEET.
10. AT ALL RECLAIMED WATER MAIN TEES AND CROSSES, VALVES SHALL BE INSTALLED ON ALL LEGS EXCEPT ONE.
11. APPROVED WATER VALVE TYPES MUELLER OR CLOW:
    A. STANDARD GATE VALVES EQUAL TO OR LESS THAN 24" DIAMETER (AWWA C-500) OR RESILIENT SEAT GATE VALVES (AWWA C-509)
    B. TAPPING VALVES WITH MECHANICAL OR STAINLESS STEEL TAPPING SLEEVE.
12. ALL RECLAIMED WATER VALVES SHALL BE ADJUSTED TO FINISH GRADE AND THE CAPS SHALL BE PAINTED PURPLE (PANTONE 522C) TO MAKE THEM PLAINLY DISTINGUISHABLE.
13. AS STANDARD PRACTICE RECLAIMED WATER MAINS SHALL BE INSTALLED 4 FEET OFF THE BACK OF THE CURB ON THE OPPOSITE SIDE OF THE POTABLE WATER LINES OR AS APPROVED BY THE CITY.

DATE: 11/05/2021 **RECLAIMED WATER NOTES - 1 OF 3** R460
City of DeLand - Standard Details

14. ALL RECLAIMED WATER MAINS SHALL HAVE A MINIMUM COVER OF 36 INCHES. IN SPECIAL CASES WHERE IT IS IMPOSSIBLE OR INAPPROPRIATE TO PROVIDE ADEQUATE COVER, DUCTILE IRON PRESSURE CLASS 350 OR CONCRETE ENCASEMENT MAY BE USED AS APPROVED BY THE CITY.
15. THE CONTRACTOR SHALL NOTIFY THE CITY'S DESIGNATED INSPECTOR PRIOR TO ATTEMPTING TO CLEAR ANY RECLAIM WATER MAIN FOR USE. THE INSPECTOR SHALL COORDINATE WITH CITY PERSONNEL AT THE RECLAIMED WATER PLANT 48 HOURS PRIOR TO BEGINNING OF ANY FULL-DIAMETER FLUSH OF MAINS. THE CONTRACTOR WILL CONDUCT A STANDARD WATER PRESSURE TEST, 150 PSI STATIC PRESSURE FOR A PERIOD OF 2 HOURS PER AWWA POTABLE WATER STANDARDS. THE RECLAIMED LINES WILL THEN BE DISINFECTED WITH CHLORINE, FLUSHED CLEAR AGAIN.
16. THE CONTRACTOR SHALL BE REQUIRED TO PIG ALL RECLAIMED MAINS IN EXCESS OF 4" IN DIAMETER AND PRIMARY DISTRIBUTION MAINS LOCATED ON COLLECTOR AND ARTERIAL ROADWAYS. LAUNCHING AND EXTRACTION POINTS SHALL BE DETERMINED BY THE CONTRACTOR. ALL PIGGING OPERATIONS SHALL BE WITNESSED BY A PUBLIC UTILITIES REPRESENTATIVE OR CITY UTILITY INSPECTOR.
17. RECLAIMED WATER MAINS SHALL BE PVC AWWA CLASS C-900 OR C-905, CL 150 (COLOR: "PURPLE" PANTONE 522C) OR DIP PRESSURE CLASS 350, STANDARD CEMENT LINED UNLESS APPROVED OTHERWSE BY THE CITY.
18. ALL RECLAIMED WATER MAINS SHALL USE A THRUST RESTRAINED JOINT METHOD IN COMPLIANCE WITH THE DUCTILE IRON PIPE RESEARCH ASSOCIATION (DIPRA) GUIDELINES. IN THE EVENT THAT PVC FITTINGS ARE SPECIFIED, THE RESTRAINED JOINT SHALL BE MODIFIED IN ACCORDANCE WITH THE RECOMMENDED ADDITIONAL RESTRAINED LENGTH REQUIRED FOR PIPE WRAPPED WITH POLYETHYLENE. IN NO INSTANCE SHALL THRUST BLOCKS BE PERMITTED.
19. MEGALUGS, BOLTLESS RESTRAINED JOINTS, OR GRIPPER GASKETS SHALL BE USED ON ALL RESTRAINED JOINT INSTALLATIONS. MINIMUM DEPTH OF BURY ON PIPES NOT MEETING REQUIRED COVER REQUIREMENTS SHALL FOLLOW THE MOST RECENT DIPRA THRUST RESTRAINT DESIGN GUIDELINES. SEE DETAILS W408 AND W409.
20. GRIPPER RING GASKETS BY ROMAC MAY BE USED AS APPROPRIATE FOR RESTRAINING PRESSURE PIPE TO FITTINGS, VALVES, ETC.
21. UPON CONSTRUCTION COMPLETION AND ACCEPTANCE OF THE SYSTEM, IT SHALL BE THE DESIGN ENGINEER'S RESPONSIBILITY TO INSURE THAT THE SYSTEM IS PROPERLY CERTIFIED AND ACCEPTED BY THE CITY OF DeLand UTILITIES AND "AS-BUILTS" ARE PROVIDED TO THE CITY, PRIOR TO ANY USE OF THIS SYSTEM.
22. ALL RECLAIMED WATER MAINS AND SERVICE LINES SHALL BE READILY DISTINGUISHABLE BY THEIR "PURPLE" (PANTONE 522C) COLOR OR TAPE MARKINGS. DUCTILE IRON PIPE SHALL BE WRAPPED WITH PURPLE PANTONE 522C POLYETHYLENE.
23. ALL RECLAIMED WATER SERVICES SHALL BE MARKED ALONG THE OUTSIDE EDGE OF CURB WITH AN "R". VALVES AND BLOW-OFFS FOR RECLAIMED WATER MAINS SHALL BE MARKED BY AN "X" SET INTO THE CURB.
24. RECLAIM WATER SERVICES SHALL BE NORMALLY DOUBLE 1-1/2" SERVICES LOCATED AT SIDE LOT LINES ALTERNATING WITH POTABLE WATER SERVICE LOCATIONS. IN INSTANCES WHERE RECLAIMED WATER SERVICES NEED TO BE OFFSET, DUE TO SEWER LATERAL CONNECTION. 1" SINGLE SERVICES SHALL BE SPECIFIED, THESE SERVICES MAY BE OFFSET FROM THE LOT LINE A MAXIMUM DISTANCE OF 4.0'.

DATE: 11/05/2021 **RECLAIMED WATER NOTES - 2 OF 3** R461
City of DeLand - Standard Details

25. MAXIMUM OBTAINABLE SEPARATION OF PUBLIC RECLAIMED WATER MAINS, STORMWATER MAINS, AND SANITARY SEWER MAINS SHALL BE MAINTAINED. A MINIMUM HORIZONTAL SEPARATION OF THREE (3) FEET (OUTSIDE TO OUTSIDE), TEN (10) FEET PREFERRED. A MINIMUM VERTICAL SEPARATION OF SIX (6) INCHES, IF WATER MAIN IS ABOVE STORM, SAN. SEW. & RECLAIMED MAINS. A MINIMUM VERTICAL SEPARATION OF EIGHTEEN (18) INCHES, IF WATER MAIN IS BELOW STORM, SAN. SEW. & RECLAIMED MAINS. (Ref Detail W420)
26. NO RECLAIMED WATER HOSE BIBBS ARE PERMITTED.
27. A 75-FOOT SETBACK DISTANCE SHALL BE PROVIDED FROM PUBLIC ACCESS REUSE WETTED AREAS TO ANY PUBLIC AND ANY PRIVATE POTABLE WATER SUPPLY WELLS.
28. LOW TRAJECTORY NOZZLES ARE REQUIRED WITHIN 100 FEET OF PUBLIC EATING, DRINKING OR BATHING FACILITIES.
29. ALL TAPPING OF MAINS SHALL BE PERFORMED BY THE CONTRACTOR AND WITNESSED BY THE CITY INSPECTOR. SCHEDULING OF THESE CONNECTIONS SHALL REQUIRED A MINIMUM 48 HOUR NOTIFICATION (MEASURED ON NORMAL WORK DAYS) DIRECTED TO THE CITY'S DESIGNATED SITE INSPECTOR WHO SHALL COORDINATE THE WORK DIRECTLY WITH THE CITY'S UTILITIES DEPARTMENT. SUBSEQUENTLY, THE CONNECTION SHALL BE SCHEDULED TO COMMENCE BETWEEN 7:00 A.M. AND NOON ON THE APPROPRIATE DAY, UNLESS ALTERNATE TIMES HAVE BEEN APPROVED BY THE CITY.
30. WITH RESPECT TO TIE-IN CONNECTIONS, THE CITY RESERVES THE RIGHT TO REQUIRE CONNECTIONS TO BE PERFORMED DURING PERIODS OF LOW FLOW IN ORDER TO MINIMIZE SERVICE DISRUPTION TO EXISTING CUSTOMERS.
31. ALL WORK PERFORMED UPON RECLAIMED WATER FACILITIES OWNED OR PROPOSED TO BE OWNED BY THE CITY, SHALL BE CONSTRUCTED BY AN UNDERGROUND UTILITY OR GENERAL CONTRACTOR LICENSED IN THE STATE OF FLORIDA AND REGISTERED WITH THE CITY.
32. FOR CONSTRUCTION PURPOSES, THE PLANS SHALL PROVIDE DIMENSION OF THE PROPOSED LOCATIONS OF ALL RECLAIMED WATER MAINS MEASURED FROM THE BACK OF CURB (OR EDGE OF PAVEMENT IF NO CURB EXISTS).
33. ALL HDPE PIPE RECLAIMED WATER MAINS SHALL BE SDR 11 UNLESS SPECIFICALLY NOTED OTHERWISE. THE HDPE PIPE SHALL BE SIZED TO MATCH THE EXTERNAL DIAMETER OF THE PVC OR DIP TO WHICH IT IS ATTACHED.
34. ALL P.V.C. PIPE SHALL BE STORED IN SUCH A WAY AS TO PREVENT WARPING, DEFLECTION, OR ANY DEFORMATION.
35. RECLAIMED WATER HYDRANTS ARE NOT ALLOWED BY THE CITY.
36. NO USED, RE-USED, RUSTED, SECOND HAND, OR ANY MATERIAL THAT IS NOT "NEW" SHALL BE USED IN ANY UTILITY IMPROVEMENT PROJECTS WITHIN THE CITIES SERVICE AREA.
37. LARGE RECLAIMED WATER METERS GREATER THAN 2" TAKES A MINIMUM OF 6 WEEKS FOR DELIVERY. IN ADDITION, ALL METERS AND VAULTS GREATER THAN 2" SHALL BE INSTALLED BY THE OWNER/ DEVELOPER OR CONTRACTOR. THE FEE COLLECTED BY THE CITY IS FOR MATERIALS ONLY. ALL METERS, 2" AND LESS, SHALL BE INSTALLED BY THE CITY, AFTER ALL FEES HAVE BEEN PAID.
38. TYPICALLY, THE CITY PREFERS DOUBLE SERVICE INSTALLATIONS WHEREVER FEASIBLE. WHEN DESIGN CONFLICTS EXIST, SINGLE SERVICES MAY BE ALLOWED. THIS MAY APPLY AT STORMWATER INLETS, FIRE HYDRANTS, FPL TRANSFORMERS, ETC. AND OTHER LOCATIONS DEEMED APPROPRIATE BY THE CITY.
39. ALL RECLAIMED WATER VALVE BOXES SHALL HAVE RECTANGULAR SHAPED COVERS, AND SHALL BE PAINTED "PURPLE" (PANTONE 522C) AND LABELED REUSE OR RECLAIM.

NOTE: DIP = DUCTILE IRON PIPE

DATE: 11/05/2021 **RECLAIMED WATER NOTES - 3 OF 3** R462
City of DeLand - Standard Details

CITY OF DELAND, FLORIDA
1102 S. GARFIELD AVENUE, DELAND, FLORIDA 32724

DATE: 11/05/2021
CHECKED BY: NAME
SCALE: NOT TO SCALE
DRAWN BY: ERIC SAMPSON

TITLE: RECLAIMED WATER DETAILS
FILE: drive letter/details locations

CITY OF DELAND
Request for Commission Action
June 21, 2023

SUBJECT: Applicant Name: City of DeLand
Project Number: AN23-105 – Annexation of city owned property consisting of parcels 2 and 4 of the Hiram Waters Grove Plat, to include the southern half of the adjacent E. Haven Rd. right of way
Project Location: 2.2793 acres located on the south side of E. Haven Rd., east of S. Amelia Ave. and west of S. Garfield Ave.
Project Description: Annex 2.2793 acres
Staff Planner: Kendall Story

DEPARTMENT: Planning

PREPARED BY:

ATTACHMENTS: AN23-105 Staff Report, AN23-105 Zoning & Location Map, AN23-105 Aerial Map, Exhibit A - Legal Description, Exhibit B - Sketch of Description

APPROVED BY: Emily Ragusa, Community Dev. Coordinator, June 15, 2023

SUMMARY/HIGHLIGHT:

PLANNING DEPARTMENT STAFF REPORT
TO
PLANNING BOARD

June 21, 2023

APPLICATION: AN23-105

1. **Requested Action:** Annexation of lots 2 and 4 of the Hiram Water's Grove plat into the City limits of DeLand

2. **Location:** Located southeast of E. Haven Rd., west of S. Garfield Ave.

3. **Petitioner**: Ray Bahrami, City Engineer, on behalf of the city

4. **Owner**: City of DeLand

5. **Size of parcel(s):** ± 2.2793 acres

6. **Parcel ID**: 702102000060; 702102000052

7. **Land Use Designation & Zoning of Subject Property:**

Future Land Use: Volusia County: Urban Medium Intensity UMI

Existing Zoning: Volusia County: R-4

Existing Use: Undeveloped

8. **Surrounding Land Use & Zoning:**

	LAND USE	ZONING
North:	VC: UMI	VC: R-4
South:	LDR	R-1
East:	VC: UMI	VC: R-4
West:	LDR	R-1

9. Physical Characteristics: The subject property is located in unincorporated Volusia County and is currently zoned R-4 (Urban Single-Family) with a future land use designation of County UMI (Urban Medium Intensity). The subject property is one of multiple parcels being annexed into the city in an effort to expand the existing Public Works Complex. The ultimate goal is to combine the subject property with adjacent property owned by the City of DeLand, and combine them into a single property. However, not all of the zoning and land use designations of the parcels

being assembled are the same. Therefore, prior to combining any of the city-owned parcels, the land use and zoning designations will need to be amended so that they are all consistent. The proposed annexation consists of ± 2.2793 acres, and will also include the southern half of E. Haven Rd. right-of-way. The subject property does not appear to contain any wetlands and does not lie within the 100-year flood zone. The parcel is wooded and undeveloped. The subject property is owned by the City of DeLand, and all site improvements will require review and approval of a separate site plan or other development application.

10. Public Services & Utilities: The City's Utilities Department determined the closest City water main is a 12" main on Amelia Ave. and a 2" main on Haven Rd., and the closest city sewer main is a 24" and an 8" gravity sewer line located on Haven Rd. The Police Department has determined the appropriate Patrol Zone (5), and the Fire Department has confirmed that there is adequate fire protection.

11. Growth Management Plan Consistency:
The city-owned property to the south of the subject property is the location of the existing Public Works department and future administrative building. To the north and west of the subject property are residential properties, less than a half-acre each. To the east is an existing industrial use.

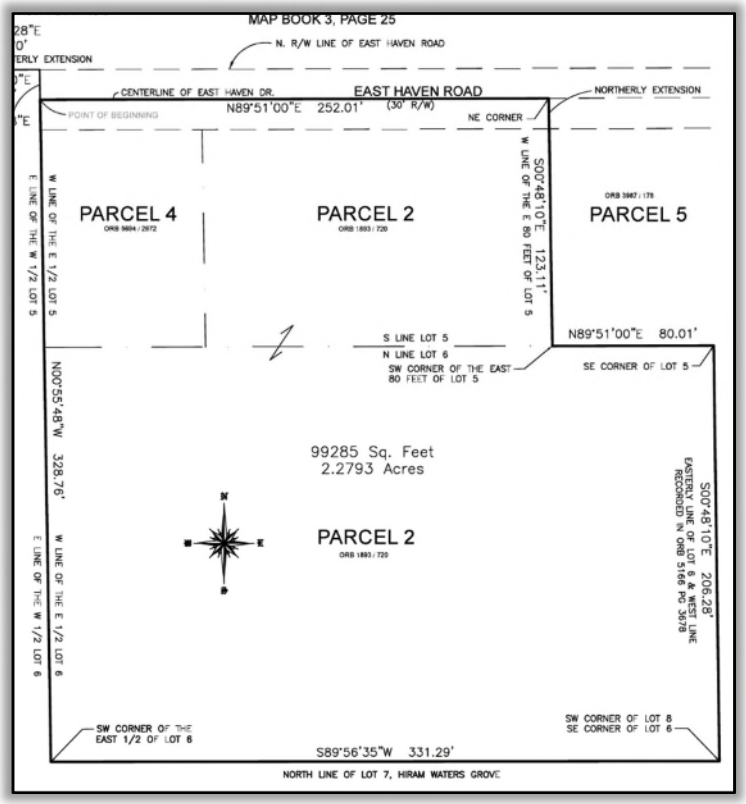

12. Analysis: The City's guidelines for annexation require a property be sufficiently **contiguous** to property already within the city limits and to be accessible to public services provided. In addition, the State requires the property be **reasonably compact**, **not circuitous**, and **does not create an enclave**. The subject property does not create an enclave, is contiguous to the City of DeLand, is reasonably compact and is not circuitous. The parcel is contiguous to the city to the south by ± 331 ft. and to the west by ± 328 ft.

Recommendation: Staff recommends that the Planning Board forward this annexation petition to the City Commission, with a recommendation for approval.

Based upon the concurrency requirements of the State of Florida and the City's concurrency management plan, as adopted in Article 5, Sec. 33-41 of the Land Development Regulations, approval of the proposed annexation does not automatically provide vested development rights. At the time the developer applies for a development permit, adequate infrastructure must exist to support the proposed development. If such infrastructure does not exist, the developer may be required to incur additional expense to ensure that the necessary infrastructure is provided.

L\COMMDEV\PLANNING\STAFF REPORTS\2023\PB\SR-AN23-105 Haven Rd

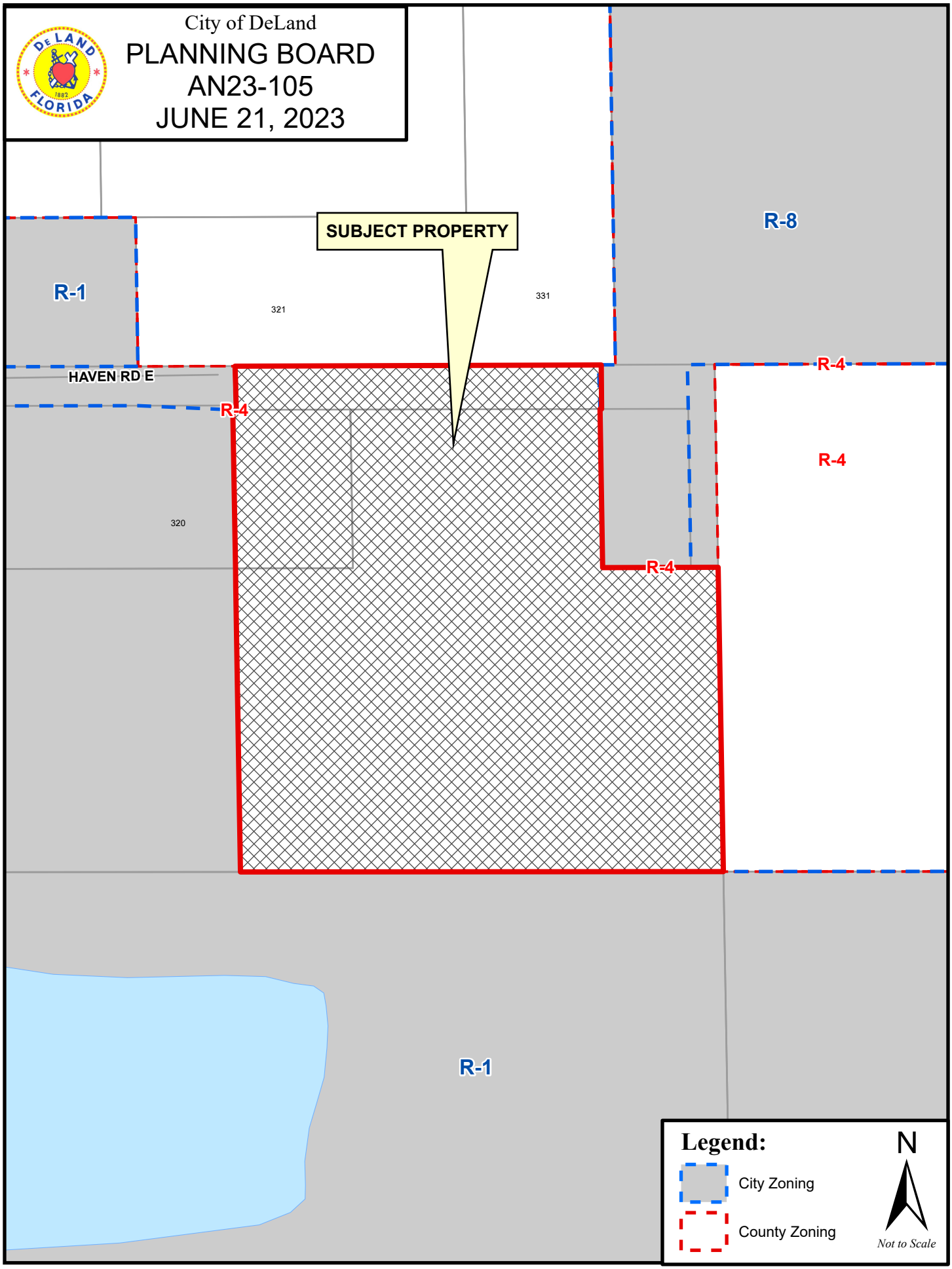
City of DeLand
PLANNING BOARD
AN23-105
JUNE 21, 2023
SUBJECT PROPERTY
R-8
R-1
321
331
HAVEN RD E
R-4
R-4
R-4
320
R-4
R-1
Legend:
City Zoning
County Zoning
N
Not to Scale

City of DeLand

PLANNING BOARD
AN23-105
JUNE 21, 2023

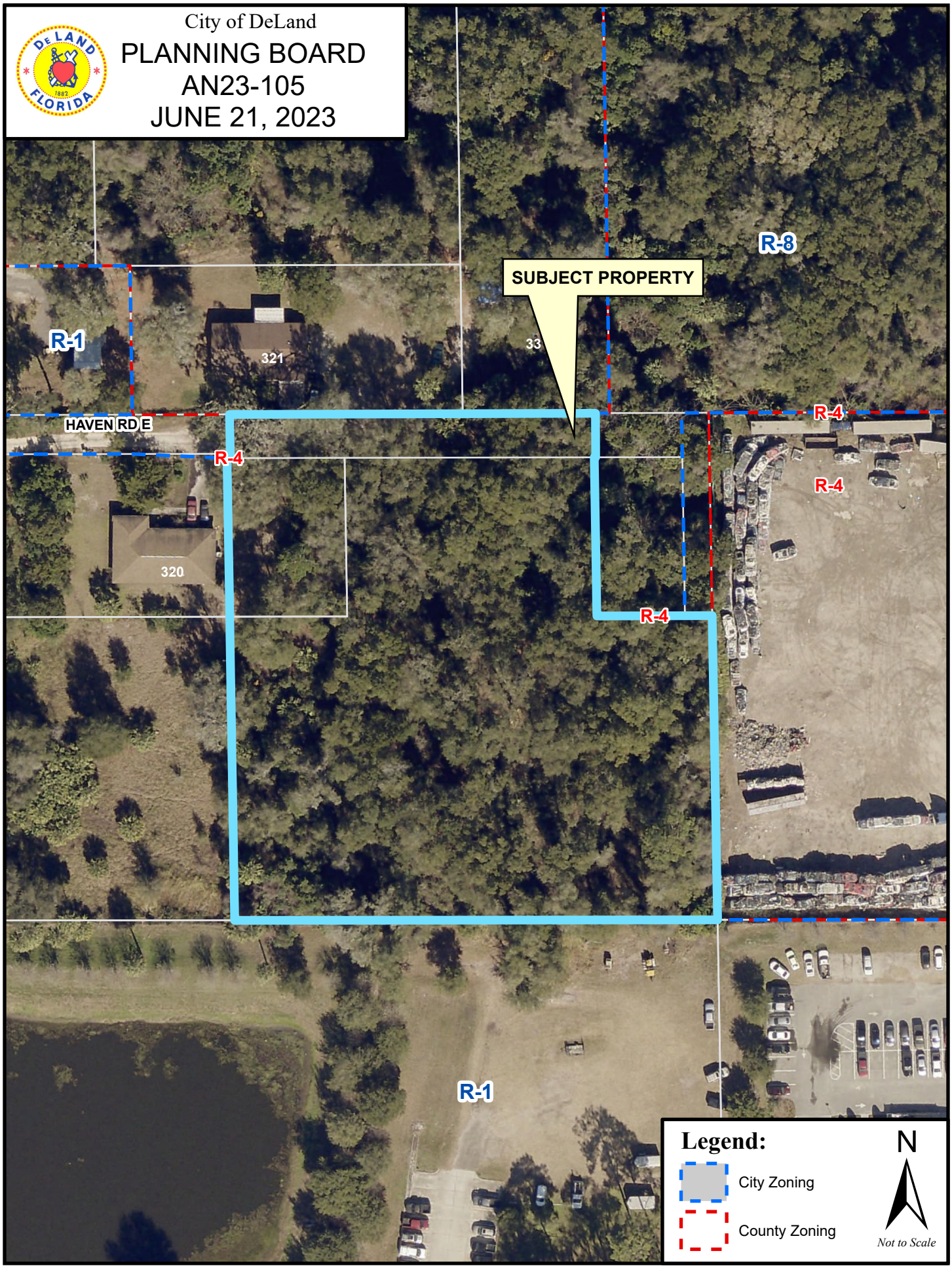

EXHIBIT "A"

ANNEXATION DESCRIPTION:

A PORTION OF THE SOUTH ½ OF EAST HAVEN DRIVE.

AND:

ALL OF PARCEL 2 ALSO KNOWN AS THE EAST 1/2 OF LOT 6, AND THE EAST 1/2 OF THE SOUTH 108.00 FEET OF LOT 5, LESS AND EXCEPT THE WEST 80.00 FEET AND THE EASE 80.00 FEET OF SAID LOT 5, ACCORDING TO THE PLAT OF THE ASSESSOR'S SUBDIVISION OF HIRAM WATERS GROVE, LOCATED IN THE NORTHEAST 1/4 OF SECTION 21, TOWNSHIP 17 SOUTH, RANGE 30 EAST, RECORDED IN MAP BOOK 3, PAGE 25, PUBLIC RECORDS OF VOLUSIA COUNTY, FLORIDA. THIS DESCRIPTION DESCRIBES THE LANDS IDENTIFIED IN OFFICIAL RECORDS BOOK 1893 PAGE 0720.

AND:

ALL OF PARCEL 4, ALSO KNOWN AS THE WEST 80.00 FEET OF THE EAST 1/2 OF LOT 5, ACCORDING TO THE PLAT OF THE ASSESSOR'S SUBDIVISION OF HIRAM WATERS GROVE, LOCATED IN THE NORTHEAST 1/4 OF SECTION 21, TOWNSHIP 17 SOUTH, RANGE 30 EAST, RECORDED IN MAP BOOK 3, PAGE 25, PUBLIC RECORDS OF VOLUSIA COUNTY, FLORIDA. THIS DESCRIPTION DESCRIBES THE LANDS IDENTIFIED IN OFFICIAL RECORDS BOOK 5694 PAGE 2672.

DESCRIBED AS FOLLOWS:

COMMENCE FROM THE NORTH 1/4 CORNER OF SECTION 21, TOWNSHIP 17 SOUTH, RANGE 30 EAST, OCCUPIED BY A 2 INCH IRON PIPE WITH NO IDENTIFICATION, IN THE ASPHALT ROAD; THENCE S01°03'28"E, ALONG THE WEST LINE OF THE NORTHEAST 1/4 OF SAID SECTION 21 AND THE WEST LINE HIRAM WATERS, MAP BOOK 3, PAGE 25 A DISTANCE OF 710.70 FEET TO A POINT BEING ON THE WESTERLY EXTENSION OF THE NORTH LINE OF EAST HAVEN STREET, (BEING A 30 FOOT RIGHT OF WAY, AS NOW LAID OUT AND OCCUPIED; THENCE N89°51'00"E ALONG SAID SOUTHERLY LINE, A DISTANCE OF 332.05 FEET; THENCE DEPART SAID NORTH RIGHT OF WAY S00°55'48"E ALONG THE WEST LINE OF THE EAST ½ OF LOT 5, A DISTANCE OF 15.00 FEET TO THE POINT OF BEGINNING; THENCE N89°51'00"E ALONG THE CENTER LINE OF EAST HAVEN ROAD A DISTANCE OF 252.01 FEET TO A POINT ON THE NORTHERLY EXTENSION OF THE WEST LINE OF THE EAST 80.00 FEET OF LOT 5 SAID HIRAM ACERS; THENCE DEPARTING SAID CENTER LINE S00°48'10"E ALONG THE WEST LINE OF THE EAST 80 FEET OF LOT 5, A DISTANCE OF 123.11 FEET TO THE SOUTHWEST CORNER OF THE EAST 80 FEET OF LOT 5; THENCE DEPARTING FROM SAID SOUTHWEST CORNER OF THE EAST 80 FEET OF LOT 5 N89°51'00"E ALONG THE SOUTH LINE OF LOT 5, 80.01 FEET TO THE SOUTH EAST CORNER OF LOT 5; THENCE DEPARTING FROM SAID SOUTHEAST CORNER OF LOT 5, S00°48'10"E ALONG THE EASTERLY LINE OF LOT 6 AND THE WEST LINE OF THE LANDS RECORDED ON OFFICIAL RECORDS BOOK 5166, PAGE 3678, A DISTANCE OF 206.28 FEET TO THE SOUTHWEST CORNER OF LOT 8 AND THE SOUTH EAST CORNER OF LOT 6; THENCE DEPARTING FROM SAID SOUTHWEST CORNER OF LOT 8 AND THE SOUTH EAST CORNER OF LOT 6, S89°56'35"W ALONG THE NORTH LINE OF LOT 7, SAID HIRAM WATERS GROVE, A DISTANCE OF 331.29 FEET TO THE SOUTHWEST CORNER OF THE EAST 1/2 OF LOT 6; THENCE DEPARTING FROM SAID SOUTHWEST CORNER OF THE EAST 1/2 OF LOT 6, N00°55'48"W ALONG THE WEST LINE OF THE EAST 1/2 OF LOT 6 AND THE WEST LINE OF THE EAST 1/2 OF LOT 5, 328.76 FEET TO THE POINT OF BEGINNING.

HAVING AN AREA OF 99285 SQUARE FEET, 2.2793 ACRES

EXHIBIT "B"

SKETCH OF DESCRIPTION

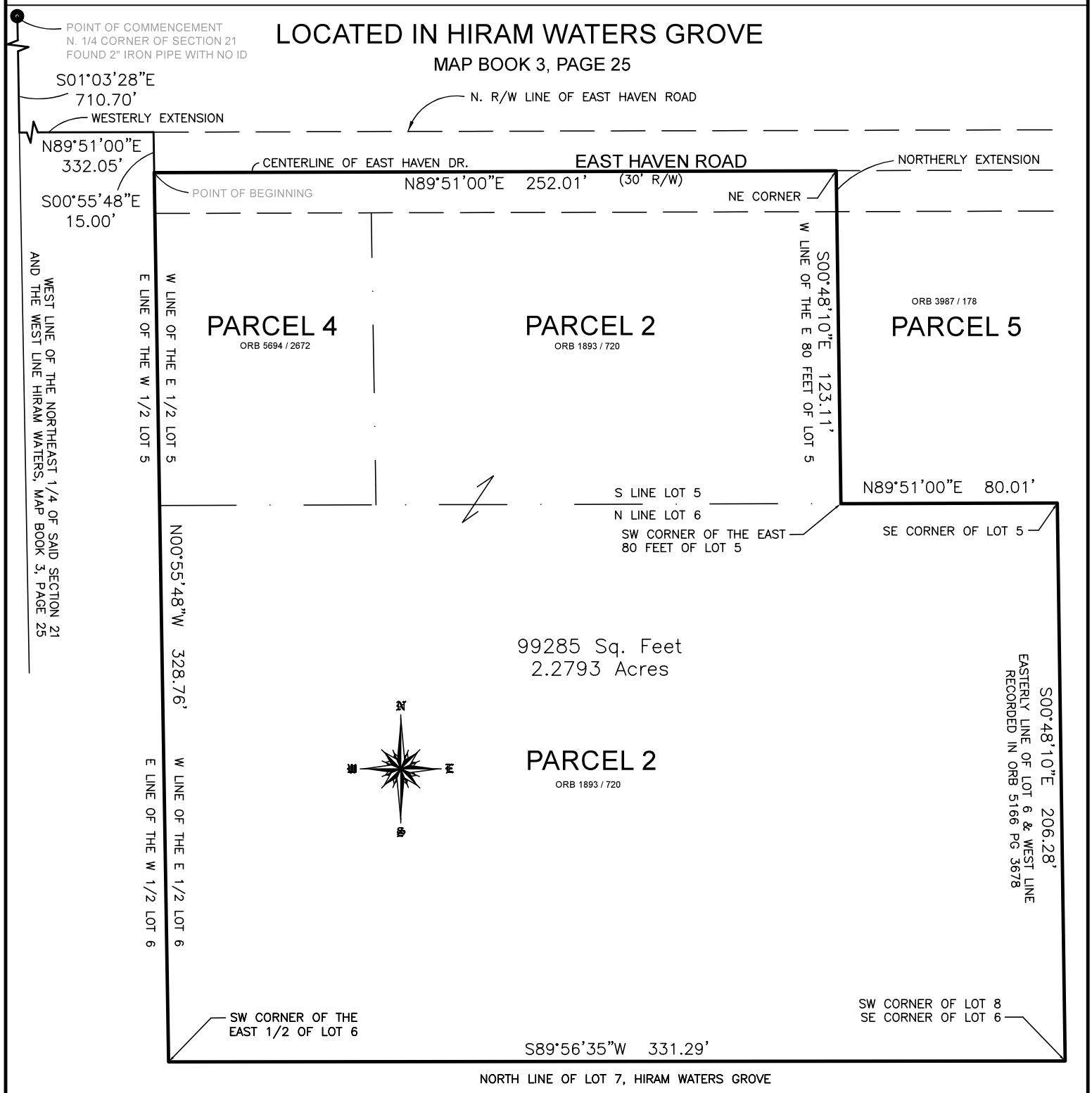

PROJECT: ANNEXATION OF PROPOSED UTILITY ADMINISTRATION BUILDING
CLIENT: NORTH OF CITY PUBLIC WORKS
DeLAND FLORIDA

SCALE: 1"=50'
DATE: 05-03-2023

LEGEND / ABBREVIATIONS

—	CHANGE IN DIRECTION
R/W	RIGHT OF WAY
℄	CENTERLINE
△	CENTRAL ANGLE
R	RADIUS
L	ARC LENGTH
CB	CHORD BEARING
PC	POINT OF CURVATURE
PT	POINT OF TANGENCY
PCC	POINT OF COMPOUND CURVE
PNT	POINT OF NON-TANGENCY
PRC	POINT OF REVERSE CURVE

SLIGER & ASSOCIATES, INC.

PROFESSIONAL LAND SURVEYORS

3921 NOVA ROAD
PORT ORANGE, FL. 32127
(386) 761-5385

LICENSED BUSINESS CERTIFICATION NUMBER 3019
www.sligerassociates.com

JOB NO. 23-0400

SHEET 1 OF 3

PLANNING DEPARTMENT STAFF REPORT
TO
PLANNING BOARD

June 21, 2023

APPLICATION: **AN23-106**

Requested Action: Petition to annex a portion of Pine Ave. ROW into the DeLand city limits

Location: North of Old Daytona Road between Woodland Blvd. and Orange Ave/Parade Circle

Petitioner: City of DeLand

Owner: City of DeLand

Size of parcel: 0.2927 ± acres

Parcel Id. No.: NA

Land Use Designation and Zoning of Subject Property:

Future Land Use: VC: I-1 (Industrial)
Existing Zoning: M-1 (Industrial)
Existing Use: Abandoned ROW

Surrounding Land Use & Zoning:

	LAND USE	ZONING
North:	Highway Commercial	C-2 (General Commercial)
South:	VC: ULI (Urban Low Intensity)	VC: R-4 (Urban Single-family Res.)
East:	Industrial	M-1 (Industrial)
West:	VC: Commercial	VC: B-4C (Business)

Physical Characteristics: The property to be annexed is a 50-foot wide by approximately 255-foot long right-of-way located adjacent to Littlefield Paint & Body located at 1630 Parade Circle. The ROW that is only partially developed and paved, begins on the south end at the intersection with Old Daytona Road and proceeds northward for a total of approximately 615 feet. The length of the ROW that has been paved is approximately 329 feet and accommodates businesses located at 1601, 1605 and 1607 Woodland Blvd. to the west. Beyond that point the ROW is vegetated and undeveloped.

The property is located within the City's Utility Service Area utilities, is served by City Police and Fire Department and the ROW is adjacent to parcels that are within the DeLand city limits on the east and west. Property along the northern edge of the ROW is also located within the city limits.

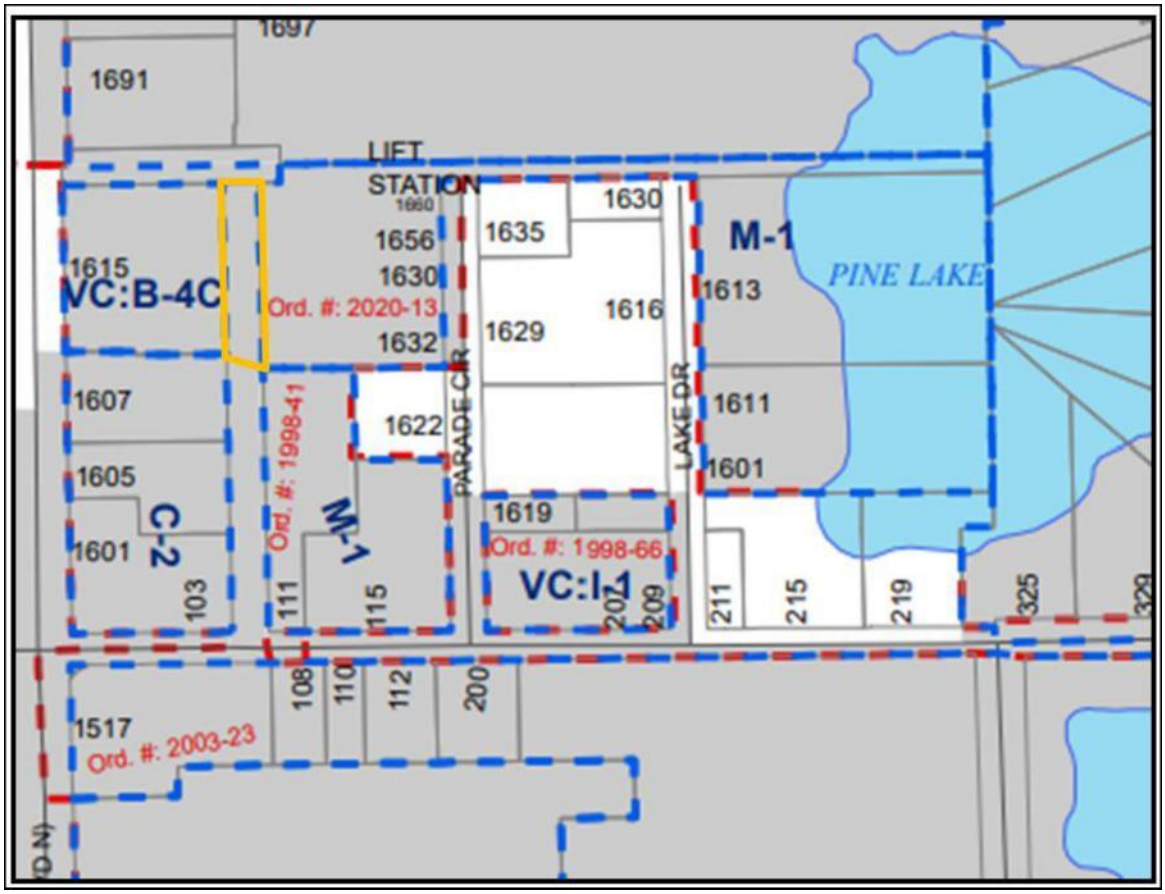

Growth Management Plan Consistency: An application for a change of land use and zoning typically follows annexation of property when development is sought. The applicant is not seeking to develop the property, but intends to abandon this newly-annexed ROW and incorporate it into the existing parcel. Additionally, there is no assignment of a land use or zoning designation to a ROW per the Volusia County Zoning and ROW Departments.

The request to abandon the ROW would be processed under a separate application. When a property is abandoned, the land is typically evenly divided between the adjoining properties, however, in this instance the owner to the west (Tire Kingdom) has stated their desire **not** to have the additional property added to their lot. Instead, the entirety of the property that is to be annexed will be abandoned at a future date and added to the property located to the east (1632 Parade Circle).

Analysis: The City's guidelines for annexation require the property to be contiguous to property within the city limits and to be accessible to public services provided. In addition, the state requires that the property be reasonably compact, not circuitous, and that it does not create an enclave. The property is contiguous as required as shown on the zoning map above. The property is compact, not circuitous, and does not create an enclave.

There are no apparent concerns about this site based on the responses received for the Annexation Feasibility Report Form. Fire and Police protection can be provided and the property is located within close proximity to water and sewer mains. Tax revenue from the property is estimated to be $1,072.98 and there are no code enforcement actions connected to the property per the Volusia County Growth Management Department.

Recommendation: The annexation of this property meets the requirements outlined. The area surrounding the property is characterized by industrial and commercial use. Staff recommends that the Planning Board forward this annexation petition to the City Commission, with a recommendation for approval.

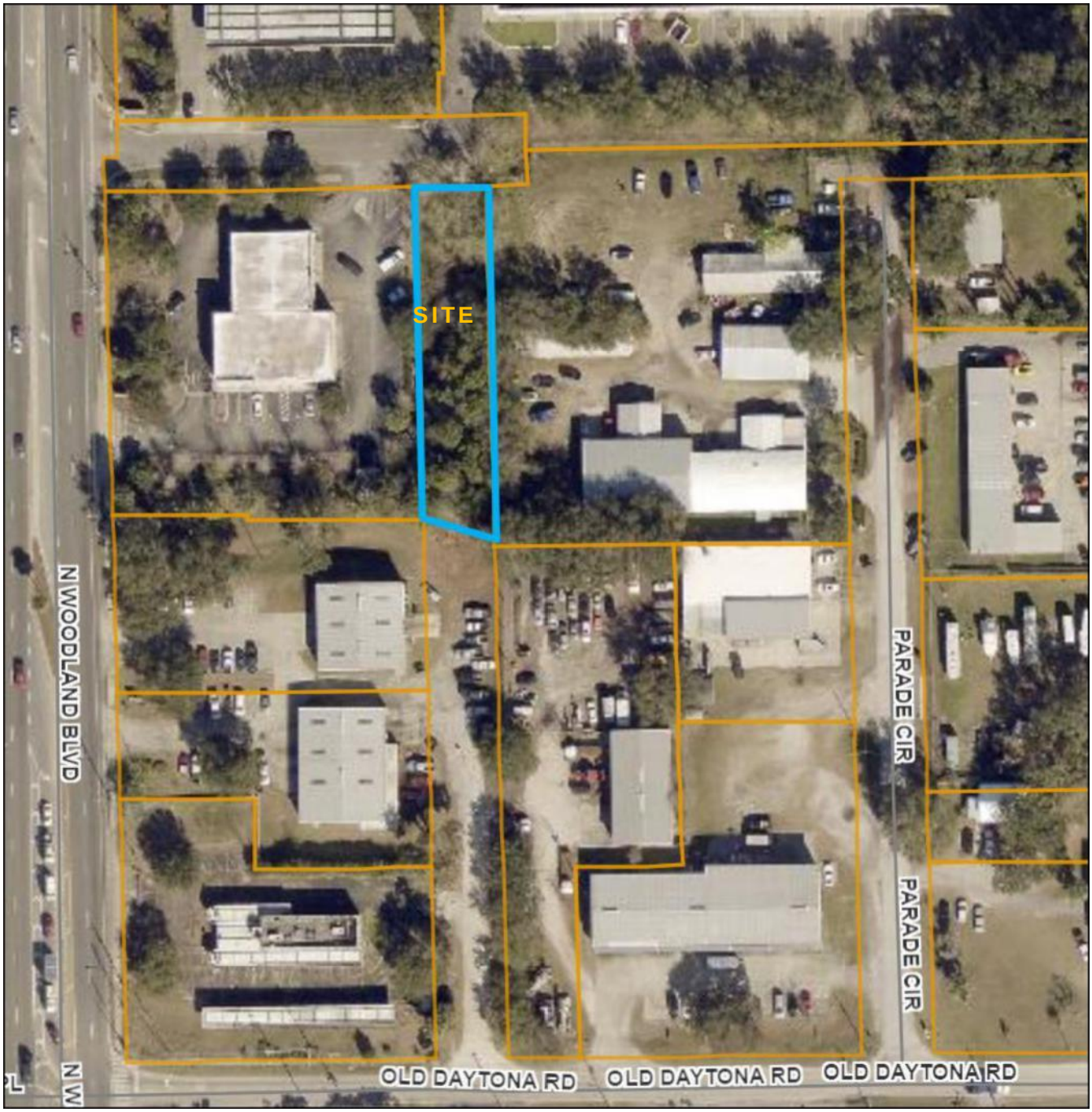

Based upon the concurrency requirements of the State of Florida and the City's concurrency management plan, as adopted in Article 5, Sec. 33-41 of the Land Development Regulations, approval of the proposed annexation does not automatically provide vested development rights. At the time the developer applies for a development permit, adequate infrastructure must exist to support the proposed development. If such infrastructure does not exist, the developer may be required to incur additional expense to ensure that the necessary infrastructure is provided.

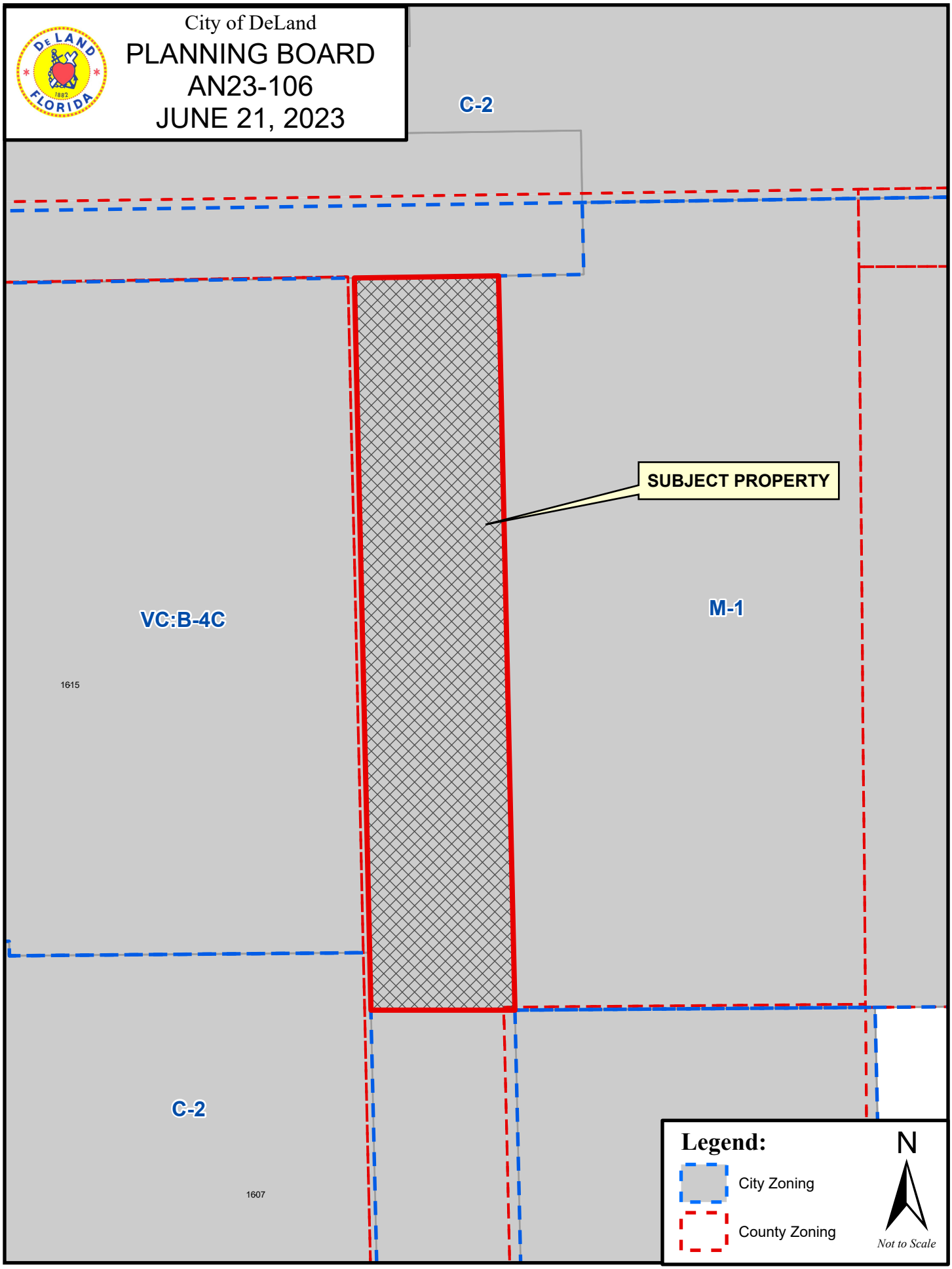
City of DeLand
PLANNING BOARD
AN23-106
JUNE 21, 2023
C-2
SUBJECT PROPERTY
VC:B-4C
M-1
1615
C-2
1607
Legend:
City Zoning
County Zoning
N
Not to Scale

City of DeLand

PLANNING BOARD
AN23-106
JUNE 21, 2023

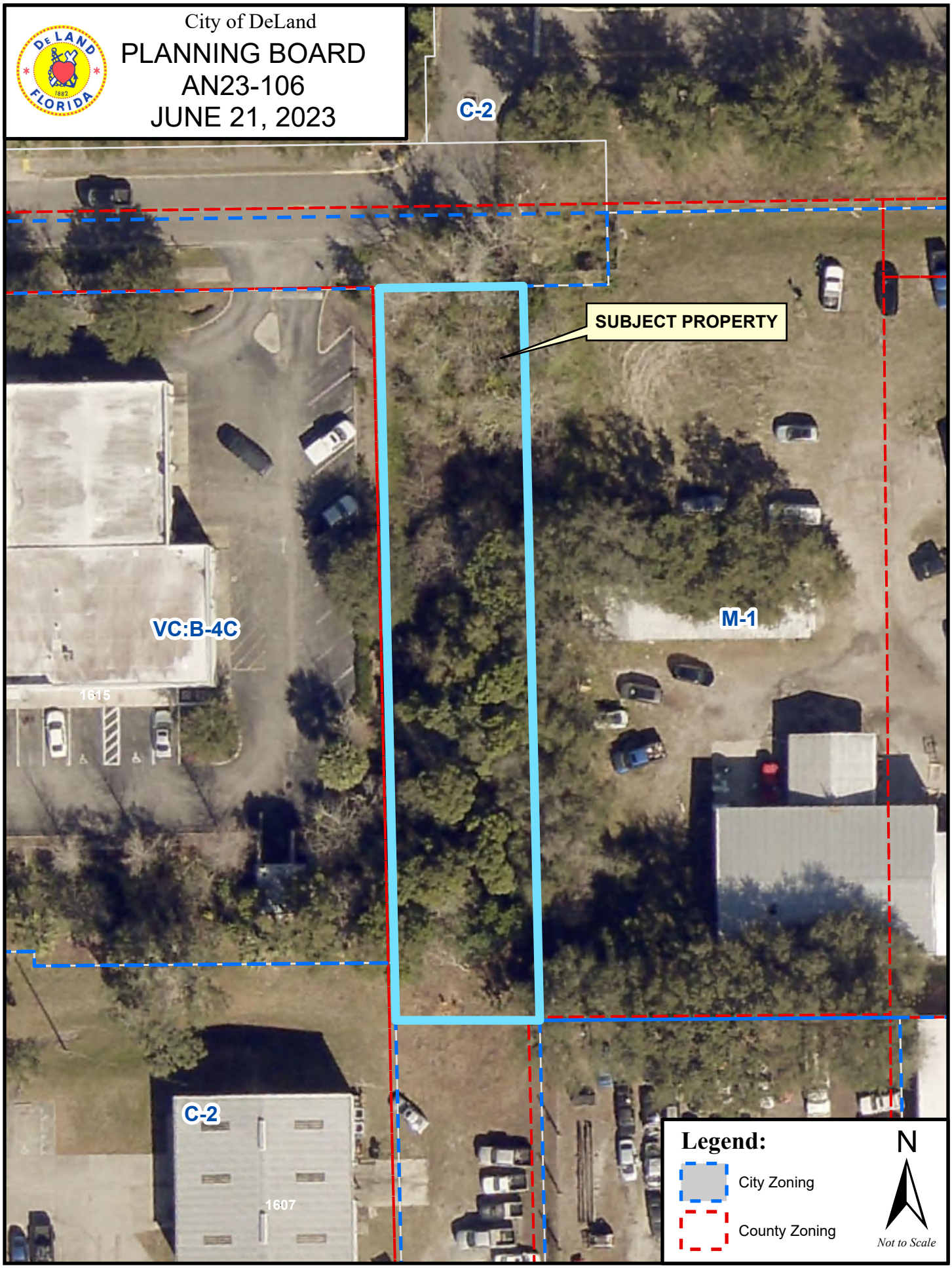

EXHIBIT "A"

LEGAL DESCRIPTION: (WRITTEN)

THAT PORTION OF PINE AVENUE LYING WEST OF LOTS 20 THROUGH 29, BLOCK B, PINEHURST, A SUBDIVISION OF THE SOUTH 1/2 OF THE SE 1/4 OF THE SW 1/4, SECTION 33, TOWNSHIP 16 SOUTH, RANGE 30 EAST, ACCORDING TO THE MAP IN MAP BOOK 6 PAGE 101, PUBLIC RECORDS OF VOLUSIA COUNTY, FLORIDA.

.2927 Acres

EXHIBIT "B"

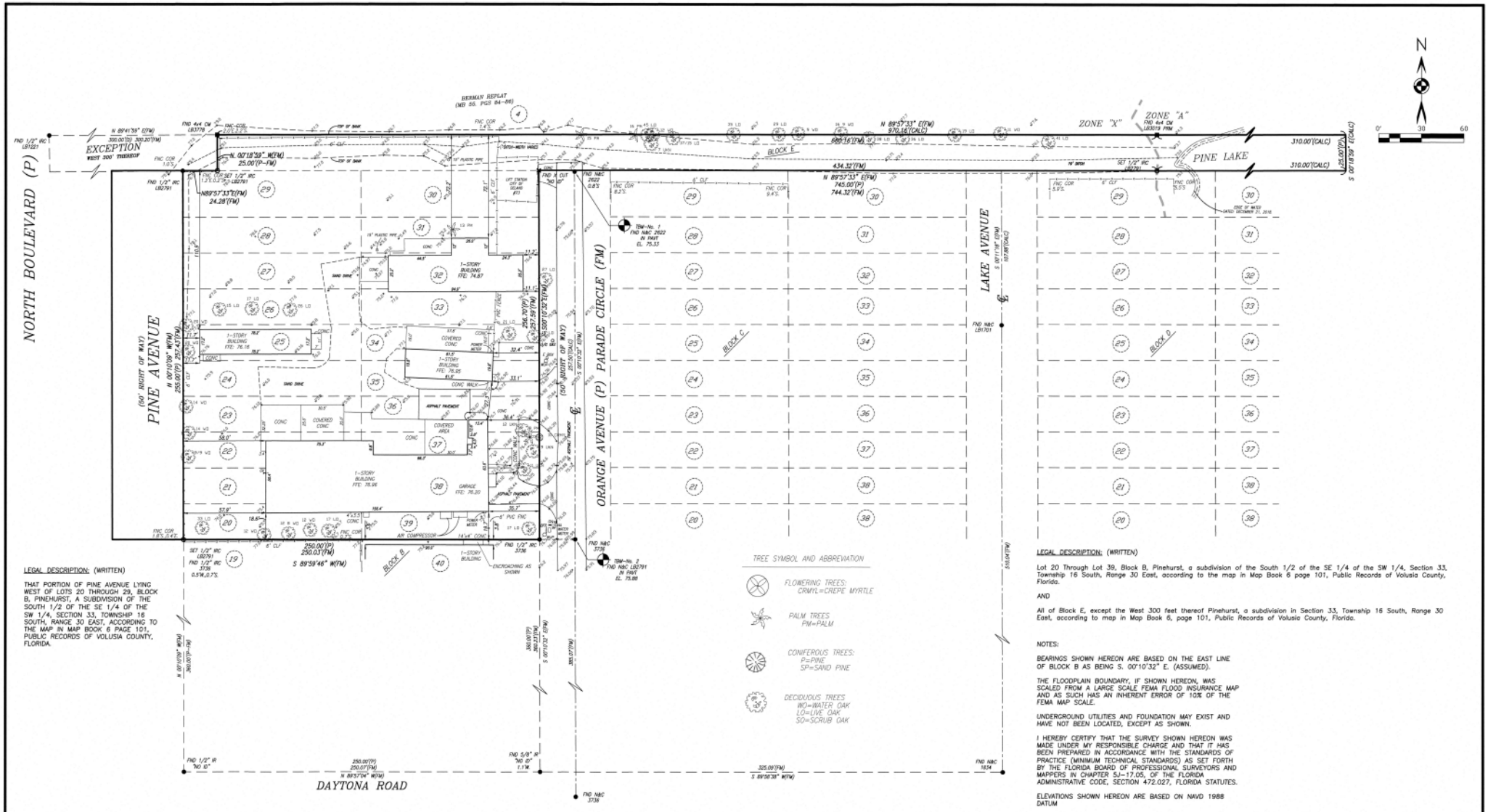

LEGAL DESCRIPTION: (WRITTEN)

THAT PORTION OF PINE AVENUE LYING WEST OF LOTS 20 THROUGH 29, BLOCK B, PINEHURST, A SUBDIVISION OF THE SOUTH 1/2 OF THE SE 1/4 OF THE SW 1/4, SECTION 33, TOWNSHIP 16 SOUTH, RANGE 30 EAST, ACCORDING TO THE MAP IN MAP BOOK 6 PAGE 101, PUBLIC RECORDS OF VOLUSIA COUNTY, FLORIDA.

LEGAL DESCRIPTION: (WRITTEN)

Lot 20 Through Lot 39, Block B, Pinehurst, a subdivision of the South 1/2 of the SE 1/4 of the SW 1/4, Section 33, Township 16 South, Range 30 East, according to the map in Map Book 6 page 101, Public Records of Volusia County, Florida.

AND

All of Block E, except the West 300 feet thereof Pinehurst, a subdivision in Section 33, Township 16 South, Range 30 East, according to map in Map Book 6, page 101, Public Records of Volusia County, Florida.

NOTES:

BEARINGS SHOWN HEREON ARE BASED ON THE EAST LINE OF BLOCK B AS BEING S. 00°10'32" E. (ASSUMED).

THE FLOODPLAIN BOUNDARY, IF SHOWN HEREON, WAS SCALED FROM A LARGE SCALE FEMA FLOOD INSURANCE MAP AND AS SUCH HAS AN INHERENT ERROR OF 10% OF THE FEMA MAP SCALE.

UNDERGROUND UTILITIES AND FOUNDATION MAY EXIST AND HAVE NOT BEEN LOCATED, EXCEPT AS SHOWN.

I HEREBY CERTIFY THAT THE SURVEY SHOWN HEREON WAS MADE UNDER MY RESPONSIBLE CHARGE AND THAT IT HAS BEEN PREPARED IN ACCORDANCE WITH THE STANDARDS OF PRACTICE (MINIMUM TECHNICAL STANDARDS) AS SET FORTH BY THE FLORIDA BOARD OF PROFESSIONAL SURVEYORS AND MAPPERS IN CHAPTER 5J-17.05, OF THE FLORIDA ADMINISTRATIVE CODE, SECTION 472.027, FLORIDA STATUTES.

ELEVATIONS SHOWN HEREON ARE BASED ON NAVD 1988 DATUM

DRAWING REVISED TO SHOW ELEVATIONS AND TREES, DATED: 11/13/19

DRAWING REVISED TO ADD LEGAL FOR PINE AVENUE, DATED: 9/8/2020

SITE DATA
BUILDING AREA (4) = 12,582 S.F.
IMPERVIOUS AREA = 9,917 S.F.
TOTAL IMPERVIOUS = 22,499 S.F.
TOTAL SITE AREA = 88,649 S.F.
PERCENTAGE OF IMPERVIOUS = 24.9%

REVISED 8/26/2019 TO COMBINE LEGAL DESCRIPTIONS
DRAWING RECERTIFIED TO: MAINSTREET COMMUNITY BANK OF FLORIDA ISAOA, 204 S WOODLAND BLVD DELAND, FL 32720;
VOLUSIA TITLE SERVICES. DATED: MARCH 11, 2019.

ABBREVIATIONS

NOTE:
This Plat of Survey is certified to and prepared for the sole and exclusive benefit of the entities and or individuals shown hereon, valid on the most current date shown hereon, and shall not be relied upon by any other entity or individual whomsoever.

This Survey / Sketch has been prepared without benefit of abstract or title search unless otherwise noted hereon.

There may be additional restrictions and/or other matters of record not shown on this Survey / Sketch that may be found in the Public Records of the county or contained within the Title Commitment.

FLOOD CERTIFICATION:

(Per map dated February 19, 2014)
This is to certify that I have consulted the Federal Insurance Flood Hazard Boundary Map and found the ABOVE named Property IS PARTIALLY located in a special flood hazard area, according to Community Panel Map No. 12127C-0470-H Map, Panel 470 of 930, Zone "X" & "A".

BOUNDARY SURVEY CERTIFIED TO:

LITTLEFIELD PAINT & BODY

BLACKWELL & ASSOCIATES
LAND SURVEYORS, INC
WWW.BLACKWELLSURVEYING.COM
995 W. VOLUSIA AVE. * DELAND, FL * PH: (386)-734-8050
CERTIFICATE OF AUTHORIZATION NUMBER LB 2791

NOT VALID WITHOUT THE SIGNATURE AND THE ORIGINAL RAISED SEAL OF A FLORIDA LICENSED SURVEYOR AND MAPPER.

BY: Robert R. Evers
ROBERT R. EVERS
FLORIDA CERTIFICATE # LS 5675

SYMBOLS :
● = REBAR FOUND (SIZE SHOWN HEREON)
○ = 1/2" REBAR & CAP SET
□ = 4"x4" CONCRETE MONUMENT & CAP SET
■ = CONCRETE MONUMENT FOUND (SIZE SHOWN HEREON)
● = R.L.S. ORIG/NAIL FOUND (SIZE SHOWN HEREON)
○ = R.L.S. ORIG/NAIL SET
○ = IRON PIPE FOUND (SIZE SHOWN HEREON)
● = RAILROAD SPIKE FOUND
● = BOLT FOUND (SIZE SHOWN HEREON)
● = P/K NAIL FOUND

DATE :	12/21/18
JOB. NO. :	11-289-13
DRAWN BY :	RE
FIELD BOOK :	525 POG. 83&87
CADD FILE / FILE NO. :	11-289-13

Planning Department
Memorandum

TO: Planning Board **DATE**: June 21, 2023

FROM: Kendall Story, CNU-A
Senior Planner

SUBJECT: Update to the 2050 Vision Plan
==========

On November 11, 2011, the City Commission adopted the 2050 Vision plan for the City of DeLand. Staff has been referring to this document as applications are reviewed and presented to the Planning Board and the City Commission. The 2050 Vision Plan serves as a guide to the City's Comprehensive Plan, and because it is a long-range, living document, it needs to be reviewed and updated as needed. Over the last 12 years, development trends have changed in the City, so, in 2019, staff reviewed the plans to see if an update was warranted. Staff involved the public through public workshops, surveys, and interviews to receive input from residents. However, the COVID-19 pandemic put these update efforts on hold. In the second half of 2022, staff conducted additional workshops with the public, City Commission and Planning Board to provide additional insight as to how to update the vision.

Data that was gathered between 2019-2020 was reviewed and staff conducted a workshop on the update with City Commission on September 26, 2022. Many of the key findings were relevant and minimal changes were made from the 2019 and 2020 update efforts. Priorities such as maintaining the "small-town feel" and allowing different housing types and sizes are still relevant today.

This new, updated plan, the DeLand 2050 Vision Plan *Update*, is included with this memo, along with the workshop materials from the September 26, 2022 Commission workshop. This item is being shared with the Planning Board for informational purposes. The updated plan will be voted on by the City Commission on July 17, 2023 as a consent item in the agenda. If approved, the 2050 Vision Plan Update will replace the current plan, continuing its purpose of helping to guide future growth in the City of DeLand.

2050 DELAND VISIONING

YOU ARE DELAND

KEY FINDINGS FROM THE 2020 PUBLIC ENGAGEMENT PROCESS

Table of Contents

Introduction & Executive Summary

Smart Growth

Evaluation and Assessment Process

General Summary and Key Findings

Guidelines

- Community Characteristics & Guidelines - “small town feel”
  - Community Character
  - Land Use
  - Transportation
- Economic Development & Sustainability
  - Economic Development
  - Sustainability/Diversity

APPENDICES

Appendix A – Commentary on Sustainable land use design and resiliency

Appendix B – Summary and results from 2019 public workshop meetings, surveys and chalkboard

Appendix C – Commentary on potential impacts of Covid-19

Appendix D – October 2020 Joint Workshop summary and directions

Appendix E – Summaries from 2021 working groups

INTRODUCTION & EXECUTIVE SUMMARY

In 2009 the City of DeLand sponsored a program to direct broad-based public input into creating a vision of what the City could be and should aspire to be in 2050. This effort led to the DeLand 2050 report which presented a vision for the DeLand Area including a concise vision statement, a land use concept and more specific guidelines for both land use and transportation. By 2019, more than ten years had passed since the original visioning process was undertaken, and it was appropriate at that point to review inputs and assumptions that led to the vision plan. Beginning in mid-2019, the City staff began the process of gathering information on the accuracy of the 2050 Vision Plan and conducting a series of events and activities to assess the status of the vision plan and to gather public comments on the overall vision planning effort. This report is the summary of the findings and revised recommendations from this assessment effort.

As staff was updating the 2050 Vision Plan, it became apparent that a statement was necessary to remind the workshop participants, that this report was for a vision of what the City residents and Commission wanted to be in 2050. This updated plan will provide guidelines for new development as well as suggestions on how to implement or achieve these guidelines.

This report is to help provide some insight as to how well we have maintained that vision and in doing so will provide City leaders guidance for the next 27 years. It is imperative that we have this ultimate goal (vision) in mind as we make decisions in the present. It is also important to note that because of the length of time this vision covers, periodic review of the goals and guidelines should be undertaken to reaffirm this is the direction we want to be heading or if changes need to be made.

The Vision does not focus on the opinion of the current status of DeLand. The focus is on the City's ultimate goal in 2050. Although it is important to comment and provide input on current events; it is also important to have a vision for the future in order to see how we are making progress in achieving the ultimate goals. It is what the Commission and its citizens desire to see the City evolve into (or maintain). Staff will be looking to find ways to achieve that vision in the coming years. It cannot be done in one day. It must be done over time, as we update all of our plans and studies and complete our capital projects. This report is intended to provide guidance in transforming DeLand into a city that is prepared to confront problems and opportunities that lie ahead, as well as anticipate challenges we have not previously faced. Although, we can only imagine what the City will look like in 2050, our goal is for the City to continue to prosper and have open communication that will contend with any differences the City may encounter.

This visioning effort is intended to continue making DeLand a better place for all who live or visit here, because we want our residents to always be proud to call DeLand home and visitors to continue visiting.

SMART GROWTH DIRECTION

During the 2009 workshops the City Commission decided to use the general Smart Growth principles in combination with the elements of the Smart Growth Initiative of Volusia County as the foundation of the DeLand 2050 Plan. Below are the guiding principles that make up Smart Growth followed by the key elements.

Smart Growth Principles

- Mix land uses — the mixing of land uses (commercial, residential, recreational, educational, public, open space, and others) can encourage foot and bike modes of transportation.
- Take advantage of compact building design — use less land for development. This includes building size as well as parking; land consumption for buildings cannot be used for open space.
- Create housing opportunities and choices — providing quality housing for people of all income levels and age groups.
- Create walkable communities — pedestrian-friendly features range from providing shade for sidewalks to master planning development types.
- Foster distinctive, attractive communities with a strong sense of place — opposite to strip development that does not instill community pride.
- Preserve open space, farmland, natural beauty, and critical environmental areas; provide recreational opportunities, and guide new development into existing communities.
- Provide a variety of transportation options — to help eliminate congestion in the transportation system.
- Strengthen and direct development to existing communities —development directed to communities already served by infrastructure, use resources of existing neighborhoods and maintain value of public and private investment.
- Make development decisions predictable, fair, and cost effective — to be able to meet the future demand for development; the concept must be accepted and endorsed by private sector. Predictability assures developers their projects can be approved.
- Encourage community and stakeholder collaboration in development decisions — concept must be consistent with community's own sense of how and where the growth should happen.

Smart Growth Initiative:

In 2004, a county-wide Smart Growth Implementation Committee was established that reviewed the principles of Smart Growth in relation to the issues facing Volusia County. That committee produced a report that broke the recommendations into seven subject areas or elements (listed below), 15 "keystone" recommendations and 49 additional recommendations that would implement the principles of Smart Growth in Volusia County. The entire report is included in the Smart Growth Workshop notebook and on the City's Planning web page.

Key Elements from Smart Growth Initiative Report (Volusia Co.)

- Protect the Environmental Core
- Develop Livable communities
- Ensure the continued existence of agriculture
- Meet the Infrastructure needs of growth
- Integrate education
- Integrate economic development

THE EVALUATION & ASSESSMENT PROCESS

There are things that are timeless and things that are timely. Hopefully this update will hit on both of those points — timeless and timely in providing the guidance our residents are looking for.

The evaluation and assessment process involved a combination of survey tools, research reports and public workshops stretching over most of 2019 and was continued into 2022. Surveys were gathered from several sources, including The National Citizens Survey (NCS), which was conducted in early 2019. The survey covered questions on a variety of issues, including some directly related to the City's long-range development. The NCS survey results were compared with national benchmarks and with the results of a similar survey done for DeLand in 2016. City staff created the "You are DeLand" campaign in 2019 to increase awareness about the update and to offer several survey opportunities for general public input including an on-line survey directed specifically at long range planning issues; a five-question written survey that was distributed at various public meetings; and a chalkboard open-comment opportunity that was located in two public gathering places. While the staff surveys did not have a statistical underpinning like the NCS survey, they nevertheless offered the public an opportunity to comment on issues of general concern and, more specifically, issues of planning interest.

In the late summer of 2019, staff initiated the production of an evaluation and assessment report of the status of the vision plan which resulted in this document, the DeLand 2050 Vision Update. This report provides a summary of the 2050 vision as a brief refresher for those who may not recall all the essential elements of the original vision report. This summary includes an analysis of development trends over the past ten years and a look at the success achieved in implementing the land use plan elements and land use and transportation guidelines. Emerging trends which may have an impact on the future vision decision-making process are also presented.

The information contained in this report became the foundation for the opening presentation at the public workshops conducted in 2019 for the purpose of gathering comments and recommendations on the success of the overall vision. Four workshops were offered over a sixty-day period from mid-October through mid-December, with three workshops being offered on weekday evenings and one workshop on Saturday morning. The workshop format offered a general presentation of the 2050 Vision Plan content, accomplishments, and development trends. Attendees then worked in smaller

groups to discuss the vision plan. Discussion topics including quality of life issues, economic development, land use, and transportation were used as an initial structure for the group discussions. Comments from each breakout group were then transcribed to provide a written record of the comments, opinions and suggestions generated by the attendees.

As the studies and documents were being updated, all future meetings and activities were halted due to the Covid-19 pandemic. To get the process moving again, a joint workshop was held on September 26, 2020 between the Planning Board and the City Commission to provide an update on what has transpired over the past year. The participants offered some comments on what they would like updated, but they did not indicate whether or not the Vision Statement is still an accurate goal to work towards. Their suggestions included:

> *The Land Use map that contained broad categories and showed areas for growth was perhaps too general and that better definitions should be presented.*
>
> *The Transportation map provided a good overall framework, but specific projects should be identified and prioritized to accomplish what was depicted.*
>
> *Agreeance with the major guidelines presented under land use and transportation.*
>
> *Sustainability is important and should be included as the City updates its plans, including the vision plan.*
>
> *Ensure that we keep economic development as a key component of the vision.*
>
> *Housing is a critical issue and the vision needs to include affordability as well as diversity of type.*
>
> *Develop means of maintaining our recognizable community character (small town appeal, even as we grow) and in particular, the enhancing of our downtown.*

As a result of this joint workshop, two working groups were held virtually to make policy recommendations to help guide staff's effort in updating the vision. The working groups discussed residential density and transportation. A summary of these virtual workshops is contained within the appendix section.

GENERAL SUMMARY & KEY FINDINGS

There were five *major themes* that emerged through the first visioning process in 2010:

1. There was a clear endorsement of the smart growth principles used to develop the draft of DeLand 2050, and the City should continue the DeLand 2050 project with the smart growth principles as the foundation
2. Growth should be focused in already developed areas and in the core portion of the City. Some of these growth areas will be suitable for higher intensity development.
3. For the most part, the areas outside the growth areas should be reserved for environmental protection, open space and recreation or to maintain existing low-density land use patterns, with the exception of a possible transit-oriented development (TOD) near the train station.
4. There will be a need for other modes of transportation to service the area other than cars as more people move into the area and to make efficient use of SunRail.
5. Creating and or preserving sense of place through urban design standards, in particular for downtown and city gateway corridors.

The statements above, as well as the comments from the workshops are generalized. There may be exceptions to these statements based on specific circumstances which is why it is important to complete updates to the DeLand 2050 Vision Plan periodically.

Although 10+ years has passed since the original 2050 Vision Plan was prepared, these five basic themes are still relevant and provide the initial discussions as the City continues to review and update its vision to reflect the current state of the City.

Information gathered from the 2019 public workshop attendees and the survey results generally support the land use concept and transportation plan offered in the Vision 2050 program. At the macro level, the land use categories and the transportation projects from the vision plan seemed to make sense to most of the participants. There was some concern about new development changing the character of existing neighborhoods as new homes expand to the southeast and western sections of the City, but these concerns are more typical of transitional area conflicts than a wholesale disagreement with the vision plan.

It was noted in the workshop presentation that the plan performance has been good at a large-scale level, but there are areas where implementation fell short of the program's intent. These shortfalls were mostly in the areas of housing diversity by type, housing affordability, increased density and intensity in areas supporting Downtown DeLand and along the transit routes, including the need to improve pedestrian and bicycle opportunities. While action has not met expectations in these topic areas, there still

seems to be good support for implementing action to achieve these ends. The survey data supports what was expressed in the workshop sessions.

Themes that were new to the discussion of the plan focused on the need for the City to be more active in sustainability programs and issues that were seen as important to the quality of life in DeLand. Community appearance (building design, landscaping, and tree cover) came up in several sessions. In selected areas, participants thought that increased density and intensity was acceptable including allowing building in the mid-rise (three to five stories) range. For Downtown and planned mixed-use areas design is more important than use. Social equity issues were raised as well.

In several sessions there was discussion about more diversity in the local economy and the need for better quality employment opportunities. In order to encourage new business development and support for existing businesses it was mentioned that access to information and support should be easier to locate. There were also comments about the need and opportunity to support home-based business development. Stetson was noted as a significant employer and was generally noted as an underutilized resource both in terms of a market and as a knowledge center.

As this document is considered an interim progress report ten years into the Vision Plan, a major change in the vision plan direction is not indicated. More effort is needed in implementation in some areas and added emphasis is desired for some topics such as sustainability and urban design. Below is a listing of the key findings discovered during the public engagement program. Most relevant was the preservation of community character.

Key Findings From 2019 Public Engagement

- 2050 Land Use concepts are still valid
- The road and rail concepts of the transportation plan need to be implemented
- Mixed-use development in downtown and transit corridors needs more work
- Diversity in housing type and housing cost is needed
- Infill development in the core of the City neighborhoods should be encouraged
- In the downtown and core areas, design is as important, if not more important than land use
- More effort is needed to create a sustainable community
- Transportation improvements need to stress walking and cycling facilities
- Bus transit is supported and ways need to be found to make it more effective
- Economic development should stress diversity and better-quality employment
- Preservation of community character as defined by the physical environment and the social environment is important across all groups

COMMUNITY CHARACTERISTICS

The Community Character Guidelines section has been added to the report and will include ways to enhance these characteristics.

Many comments from the City Commission, participants and residents centered around how they like DeLand's "small town feel", but no one has a specific definition. Also, as the City grows it should be noted there really is not a small town anymore, but rather a small City. The residents and Commission do provide characteristics that they like about DeLand. These characteristics are listed herein and will be used to create guidelines for the purpose of protecting the character of DeLand. Newer residential areas that are located remotely from the "character core" probably have little impact on the perception of community character which may be why the public is so opposed to new development. Is there a size of project the Planning Board and City Commission will accept rather than large projects?

Focusing on the term "small town feel" seems to imply that adding people to our community or growth in general is not wanted. This line of thinking is not realistic and the focus should be on maintianing the character of DeLand that attracted residents in the first place and use as guides for how we achive our 2050 Vision.

Community Character

Develop a "formula" for preserving that community character. Most observations point towards downtown DeLand, Stetson University and the residential neighborhoods that are close or within these areas as creating the character of DeLand that everyone wants to preserve ("little big town"). In order to develop a "formula" for preserving the small town community character, some key attributes must be defined.

Small town character – work needs to be done to develop a formula to determine what the characteristics are that actually defines the City as it exists now, and not the number of people; with a population of nearly 40,000, DeLand is not a small town anymore. Characteristics such as:

- Historic buildings, downtown and surrounding residential, our history;
- Downtown – entertainment, small business, residential, art, etc.;
- Friendly and Helpful residents;
- Inclusive;
- Activities - Parades on Main, events;
- Grid street pattern – physical makeup of the City;

- Civic facilities - includes government buildings, parks, and recreational opportunities;
- College - atmosphere and events;
- Central high school creates social network;
- Local businesses;
- Residential features - unique housing styles, varying types and densities

Shown from the list above, the "small town feel" is concentrated around the City's original boundaries or core area. The suburban areas are not often included when residents talk about what they like about DeLand.

Guidelines

Community Character Guidelines Existing Guidelines (2011)
Create a **sense of place** by protecting the small-town atmosphere, lifestyle, convenience, promotion of historic character and scale of buildings. Protect the important aspects of quality-of-life by having convenient shopping and promoting appearance of buildings while retaining open spaces and trees. Use design standards to preserve sense of place and to improve **gateway** appearances.
Encourage new development to reflect and protect the **historic character** of the core community by complementing the historic downtown, Stetson University, neighborhoods, other historic areas.
Community Character Guidelines New Guidelines (2020)
Create a sense of place by protecting the small town atmosphere, lifestyle, convenience, and historic character of DeLand. Maintain the current scale of buildings and not allow new construction to overshadow existing architecture. Protect the important aspects of quality-of-life by having convenient shopping, promoting appearance of buildings while retaining open spaces and trees.
Protect the local businesses and the historic portion of downtown so it remains a key component of the DeLand region.
Creation or designation of neighborhoods – define which ones are to be protected and which ones to be improved; create policies that are neighborhood specific
Maintain community character through quality design. Also design of buildings will be important as more non-residential is built in DeLand, maybe residential should now be included.
The City will continue to sponsor and support special events.

Land Use

Whether land is used for preservation and open space or for urban development, it is planned that way. Land is not preserved because no one wants to develop it; land conservation is thoughtfully planned, just as urban areas are planned around the world. As new people and businesses move into the City every day, we must plan ahead how we want to grow.

Guidelines

Land Use Guidelines Existing Guidelines (2011)
Create activity and neighborhood centers to encourage **mixed use** and walkability. Encourage mixed land uses and reduce isolated and single form land uses in order to reduce the number of miles traveled by autos.
Concentrate development at the core of the City or at **transit-oriented** sites and corridors. The **urban core** is the key area to focus development, maintaining a strong job base and taking advantage of existing infrastructure by guiding new development into these areas. Locating higher intensity development along select corridors or major centers will encourage transit and lessen traffic congestion.
Land Use Guidelines New Guidelines (2020)
Accept styles of **housing** other than single family dwellings to accommodate the shift in demographics where there will be fewer households with children and provide for households with adult children or aging parents and various income levels. *(modified)*
Find ways to create, preserve or protect **open space**, agriculture, natural beauty, and critical environmental areas while providing **recreational** opportunities for area residents to enjoy these features. *(modified)*
Encourage new growth to locate near existing developed areas through infill of undeveloped lands and the reuse or better use of existing buildings.

Transportation

Refocus from road building to alternative modes of transportation (i.e., transit, Sun Rail), by developing or advocating for transportation and mobility options that support economic activity. Developing a transportation system that includes all modes of transportation will lessen congestion and make the community safer because roads alone will not handle the needs of the community.

Guidelines

Transportation Guidelines Existing Guidelines (2011)
Keep connected with **regional transportation network**, primarily **SunRail** and I-4 through **links** from the local network and a strong connection to downtown.
Encourage walking and **walkable** communities by creating neighborhood business centers with a mix of uses and improving pedestrian atmosphere through safety, building design and aesthetic measures.
Create **connectivity** by allowing people the ability to move between major developments without necessarily entering the major road network.
At identified locations, provide that new development promotes transit styled villages and transit planned corridors; such as the commuter rail station area developing as a Transit Oriented Development (TOD).
Transportation Guidelines New Guidelines (2020)
Locate higher intensity along select corridors or within major centers to encourage transit and to lessen traffic congestion. Establishing the high intensity corridors or centers will not degrade existing residential. Provide that new development promotes **transit** styled villages and **transit planned corridors** at identified locations, such as the commuter rail station area developing as a Transit Oriented Development (TOD). *(modified)*
Develop an interconnected transportation system to manage traffic to prevent **congestion** beyond acceptable levels. *(modified)*

ECONOMIC DEVELOPMENT/SUSTAINABILITY

An additional set of guidelines has been added to the 2050 Vision Plan that involve economic development and sustainability.

Economic Development

The DeLand area is not an isolated, independent jurisdiction, but part of a large interconnected metropolitan region. These regional influences will impact how the DeLand area will grow. Learning how to interact and become involved in the region will be crucial as the City approaches 2050. These guidelines will help with decisions on how the DeLand area will develop.

Guidelines

Economic Development Guidelines Existing Guidelines (2011)
Concentrate development in the urban core region or at transit oriented sites and corridors. The urban core is the key area to focus development, maintain a strong job base and take advantage of existing infrastructure.
Continue to manage the **airport** to increase freight capacity and private planes that support the industrial parks.
Economic Development Guidelines New Guidelines (2020)
Direct most large commercial and industrial development to downtown and the designated employment centers.
Support opportunities to locate convenience-related commercial uses close to residential areas. *modified*
Support plans and programs to assist existing **business expansion** as well as new business development.
Reinvestment in underserved areas as outlined in the City's two **opportunity zones**.

Sustainability/Diversity

A healthy local economy relies heavily on its ability to be prepared for, and respond to, the everyday stresses put upon it, as well as the unforeseen stresses that arise. However, the resiliency of our community is not developed overnight, nor is it done in a vacuum. Resiliency is built through cooperation between the City and the community that it serves. This cooperation is used as our very own toolbox, using diverse methods to guide development to withstand the obstacles that lie ahead of us, while preserving its character and charm for future generations to come.

Guidelines

Sustainability/Diversity Guidelines Existing Guidelines (2011)
Become a **sustainable** community by having a sustainable growth policy requiring the wise use of fiscal and natural resources. The City should be designed to be "greener" through energy and water conservation.
Oppose new strip development that does not instill community pride and encourage the rehabilitation of the older commercial areas.
Encourage new development to reflect and protect the historic character of the core community by complementing the historic downtown; Stetson University; neighborhoods; other historic areas.

Sustainability/Diversity Guidelines New Guidelines (2020)
Take advantage of **compact** or **"cluster" development** design that uses less land for building size as well as parking. Appropriate locations for cluster or compact development are dependent upon neighborhood qualities.
Use **design standards** to preserve sense of place and to improve gateway appearances.
Support growth policies that result in wise use of resources.
Consider environment and water conservation factors when reviewing or designing projects.
Reuse of historic structures eliminates the need to dispose of building materials while preserving the City's story.
Sustainable practices such as energy conservation, solar, electric charging stations throughout town and in homes, shade will make the city more desirable for people choosing a new home. Climate change impacts must be addressed locally as well as globally.

DeLand 2050 Land Use Concept Map

The workshops and surveys were used to produce this revised draft of the DeLand 2050 Land Use map. The map presents the general land use pattern for the DeLand region in 2050. The development categories and overlays are overly expansive to provide a generalized land use pattern. The City's Comprehensive Plan and Zoning regulations will ultimately provide the needed details to help guide land use decisions. The original concept map is provided for comparison elsewhere in this report.

The map contains four broad categories that allow different densities and types of development and four overlays with specific functions. The categories and overlays are described below. These same categories and overlays are also used in the final map design. The categories cover large expanses and will ultimately be broken down into localized or neighborhood plans that display specific uses that reflect the intent of the specific category or overlay.

DeLand 2050 Map Categories:

Traditional City Center (Light Green) – This category covers the original City limits and is the area anticipating a lot of growth either from redevelopment or infill development. This area includes the downtown and the surrounding area that would transform as the downtown expands. Currently there is a mix of uses scattered throughout the Traditional City Center from commercial, parks, single and multi-family residential. Policies will be developed to allow new growth and development while protecting the existing character of the downtown.

Sustainable Growth Zone (Orange) – Part of the urban area where the majority of the new growth will take place. The boundary shown on the map corresponds closely to the boundary of the Greater DeLand Area (GDA). This boundary was chosen, because since the 1970's, the GDA was slated to be served with urban services. Note: *This category could also include the southeast area out to I-4, which encompasses Victoria Park due to its desirable access to the interstate.*

Gateways/TOD Corridors (Pink) – Transit Oriented Development (TOD) areas have been placed along several roadways and the area between the commuter rail station and downtown. A TOD is an area that will encourage higher density and a mixture of uses, in order to make a transit system more efficient for the DeLand area. These areas will see a transition from the current development pattern to a more transit friendly pattern, over time.

Limited Growth Zone (Yellow) - Retains the existing zoning in place, and may allow increases in density if it conforms to specific criteria. Such criteria may include: appropriate location, retain extra open space, protection of existing uses, availability of existing infrastructure (without expansion or extensions), contributions to sustainability, and increases economic opportunities (not residential).

I-4 Corridor (Lavender) – Contains typical interchange uses and other intense uses that can utilize their proximity to the interstate.

Rural Growth Zone (Gray) – Provides for areas that are expected to grow in a more rural manner as well as maintaining the current zoning in place.

Public Conservation Lands (Dark Green) – Designates areas that are currently under public ownership in conservation easements.

DeLand 2050 Map Overlays:

There are also two overlays that indicate certain areas for specific types of mixed-use development:

Overlay 1 – Employment Center, designated and enclosed by a blue line, is an overlay that emphasizes business or industrial uses, rather than residential. Criteria could be developed to protect business development and keep out incompatible residential uses.

Overlay 2 – SunRail Activity Area, designated and enclosed by a red line, is an overlay that emphasizes an intensive mix of uses that are compatible with the SunRail station, and also includes residential.

Categories not displayed on the map

Neighborhood Center, is an area that contains small mixed-uses that will provide primarily daily goods and services for nearby residents. Although there is no symbol shown on the map, these centers could be placed at many locations where the community would want to establish a neighborhood center.

Special Districts, are areas that have unique characteristics where the City would like to encourage the current use and allow for expansion of compatible uses. Examples of these Special Districts are the area around Stetson University, An Artists' Village, marinas, and rural clusters. Each one of these districts will have unique issues, so one set of regulations will not be appropriate. Special districts will be individually named and specific regulations will be developed to help maintain the uniqueness of that particular district as they become identified.

Another example of a Special District is the downtown and the surrounding area that would transform as the downtown expands. The uniqueness of a downtown requires individual attention to how all the uses and structures fit into the space. Policies will be

developed to allow new growth and development while protecting the existing character of the downtown.

Definitions

Complete streets – a major road corridor that includes separate bicycle and pedestrian ways; safely and efficiently accommodates transit users, bicyclists, pedestrians, and motorists; and provides easy access to adjacent land uses.

Cluster Development - generally sites housed on smaller parcels of land, while the additional land that would have been allocated to individual lots is converted to common shared open space for the subdivision residents. Typically, road frontage, lot size, setbacks, and other traditional subdivision regulations are redefined to permit the developer to preserve ecologically sensitive areas, historical sites, or other unique characteristics of the land being subdivided.

Greater DeLand Area (GDA) – created in 1973 by the State legislature and defined the area for future annexations and the provision of water and sewer by the City.

Joint Planning Agreements (JPA) – agreement between two local governments to develop a plan for a specific area that both can follow.

Multi-Modal Transportation District – A multimodal transportation district facilitates the use of multiple modes of transportation, leading to a reduction in automobile use and vehicle miles traveled.

SunRail – Central Florida's name for the commuter rail network which, as of May of 2023, has a connection to the DeLand Station.

Sustainable – A sustainable city can feed itself on the surrounding countryside with minimal reliance on other regions or countries and powers itself with renewable sources of energy. It seeks to create the smallest possible ecological footprint and to produce the lowest quantity of pollution possible; to use land efficiently, recycle materials and convert waste to energy.

Transit-Oriented Development (TOD) - is a type of development that is either located around mass transit centers or along corridors that are developed at a density and intensity that makes it feasible to be served by public transportation. A TOD helps create compact, walkable communities that provide a quality of life without complete dependence on a car for mobility within the DeLand area.

Utility Service Area – area served by City of DeLand's water and sewer services through a joint planning agreement with Volusia County.

Walkable – refers to an area that encourages walking by providing safe and convenient routes to a variety of uses.

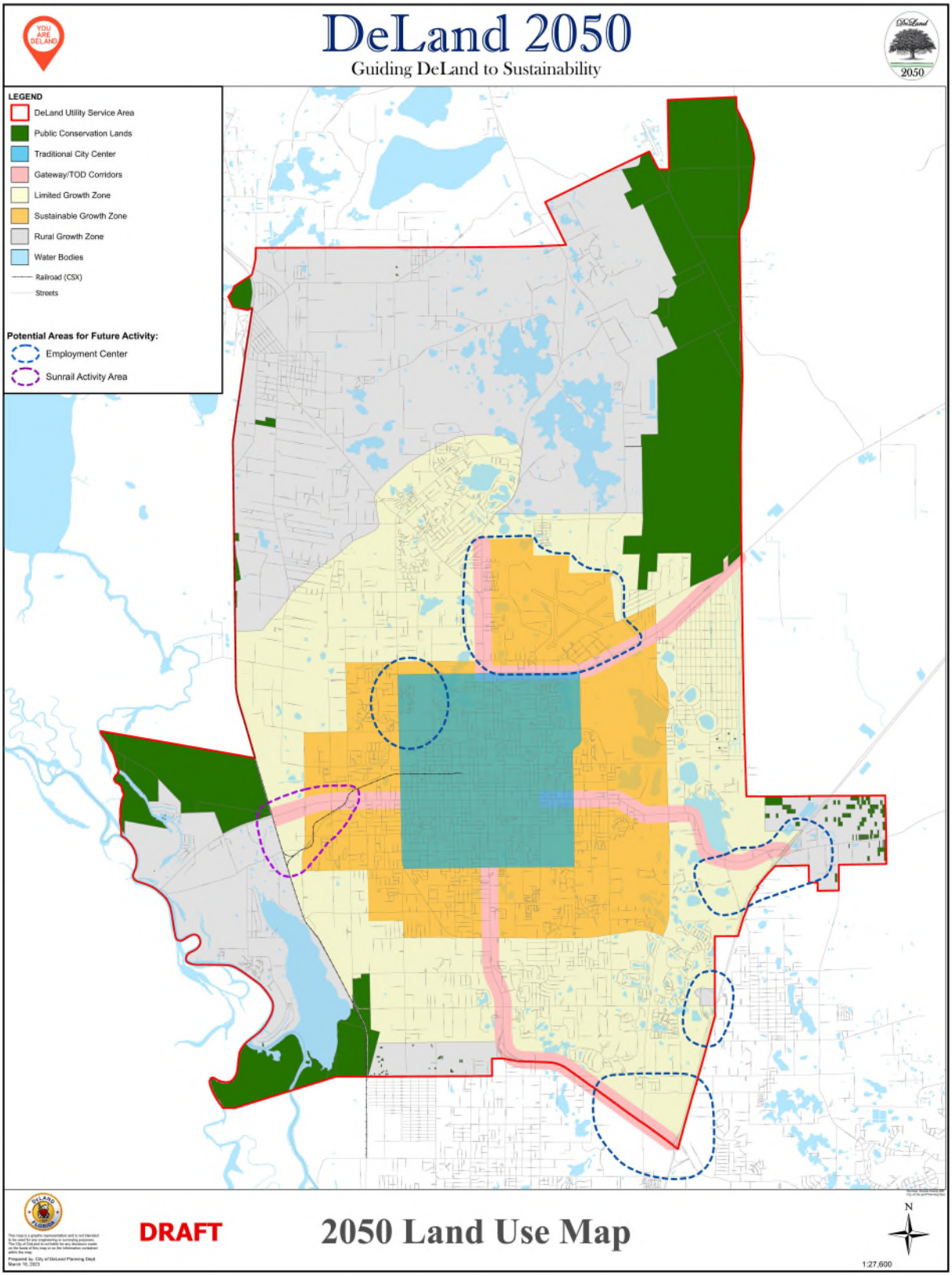
DeLand 2050
Guiding DeLand to Sustainability
YOU ARE DELAND
LEGEND
DeLand Utility Service Area
Public Conservation Lands
Traditional City Center
Gateway/TOD Corridors
Limited Growth Zone
Sustainable Growth Zone
Rural Growth Zone
Water Bodies
Railroad (CSX)
Streets
Potential Areas for Future Activity:
Employment Center
Sunrail Activity Area
DRAFT
2050 Land Use Map
N
1:27,600

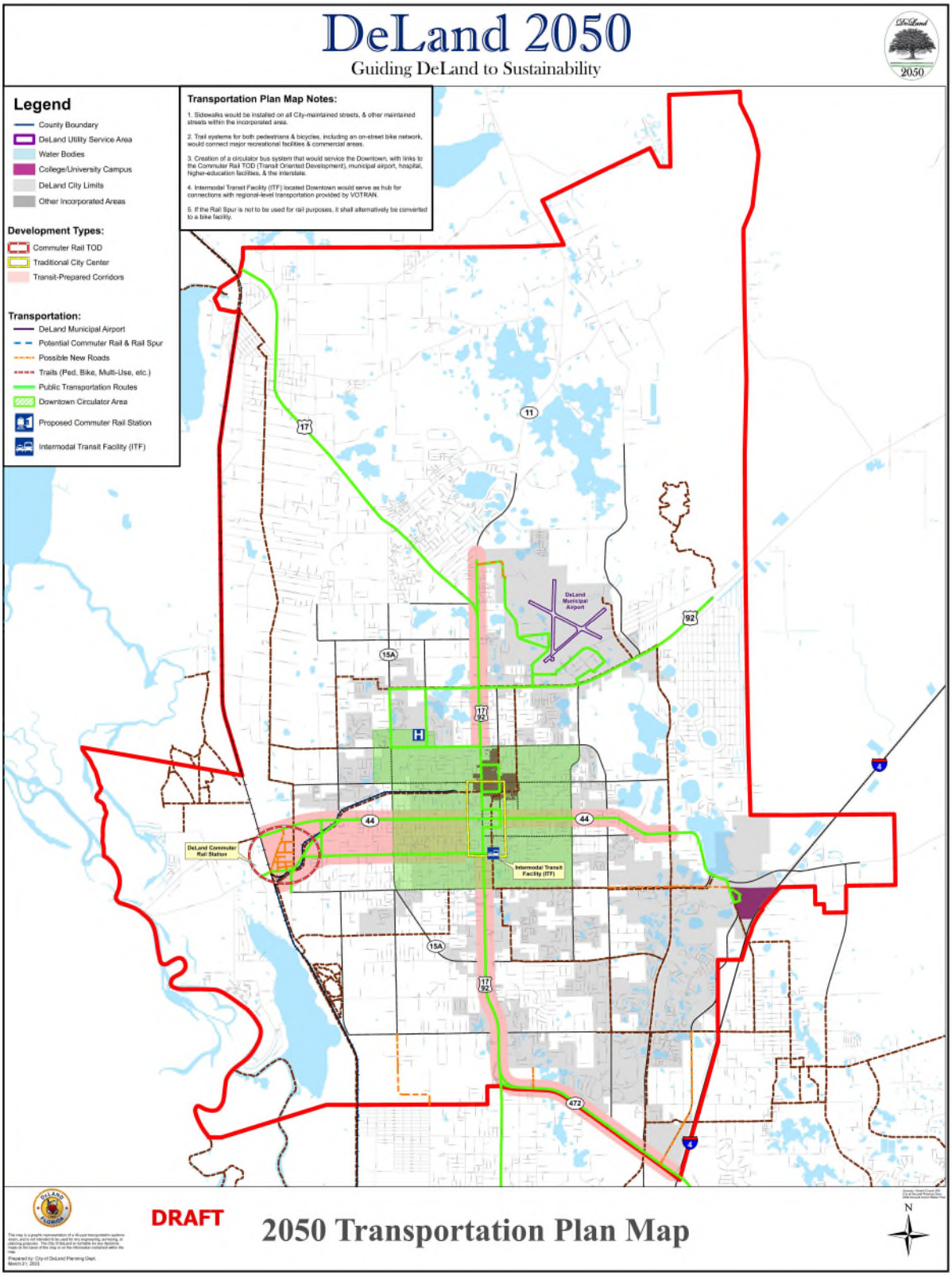
DeLand 2050
Guiding DeLand to Sustainability
Legend
County Boundary
DeLand Utility Service Area
Water Bodies
College/University Campus
DeLand City Limits
Other Incorporated Areas
Development Types:
Commuter Rail TOD
Traditional City Center
Transit-Prepared Corridors
Transportation:
DeLand Municipal Airport
Potential Commuter Rail & Rail Spur
Possible New Roads
Trails (Ped, Bike, Multi-Use, etc.)
Public Transportation Routes
Downtown Circulator Area
Proposed Commuter Rail Station
Intermodal Transit Facility (ITF)
Transportation Plan Map Notes:
1. Sidewalks would be installed on all City-maintained streets, & other maintained streets within the incorporated area.
2. Trail systems for both pedestrians & bicycles, including an on-street bike network, would connect major recreational facilities & commercial areas.
3. Creation of a circulator bus system that would service the Downtown, with links to the Commuter Rail TOD (Transit Oriented Development), municipal airport, hospital, higher-education facilities, & the interstate.
4. Intermodal Transit Facility (ITF) located Downtown would serve as hub for connections with regional-level transportation provided by VOTRAN.
5. If the Rail Spur is not to be used for rail purposes, it shall alternatively be converted to a bike facility.
DeLand Municipal Airport
DeLand Commuter Rail Station
Intermodal Transit Facility (ITF)
11
17
92
15A
44
472
4
DRAFT
2050 Transportation Plan Map
N

CITY OF DELAND
WORKSHOP OF THE CITY COMMISSION
SEPTEMBER 26, 2022 AT 5:30 PM
CITY HALL, COMMISSION CHAMBERS
120 SOUTH FLORIDA AVENUE

AGENDA

CALL TO ORDER

ROLL CALL

NEW BUSINESS

1. 2050 Vision Plan Update Workshop.

   This is a City Commission workshop concerning the updating of the 2050 Vision Plan.

CITY COMMISSION

ADJOURNMENT

The DeLand City Commission holds its regular meetings on the first and third Mondays of each month at 7:00 p.m. in the DeLand City Commission Chambers, 120 South Florida Avenue, DeLand. Notice of special meetings, workshops, changes in dates, times or locations are provided by separate Public Notices, which are posted at City Hall and on the City's web site.

The City of DeLand may take action on any matter during this meeting, including items that are not set forth within this agenda.

Public participation is encouraged on any matter on the agenda. If you desire to be recognized by the Mayor, please fill out a Speaker's Card and present it to the City Clerk.

Minutes of the DeLand City Commission meetings are not transcribed verbatim. If any person decides to appeal a decision made by the City Commission with respect to any matter considered at a public meeting or hearing, he/she will need a record of the proceedings including all testimony and evidence upon which the appeal is to be based. To that end, such person will want to ensure that a verbatim record of the proceedings is made by a court reporter, at the person's own expense.

In accordance with the American Disabilities Act, persons needing a special accommodation in order to participate in the proceedings should notify the City Clerk's Office at least 48 hours in advance of the meeting: 626-7132.

Assisted Listening System receivers are available for the hearing impaired, and can be obtained from the City Clerk.

If you wish to obtain information regarding the City Commission's Agenda, please call the City Clerk's Office: 626-7132.

We respectfully request that all pagers and cell phones be turned OFF during City Commission meetings.

Electronic Information! City Commission agendas and short form minutes are now available on the City's web page: www.deland.org.

CITY OF DELAND
Request for Commission Action
September 26, 2022

SUBJECT: 2050 Vision Plan Update Workshop.

DEPARTMENT: Planning

PREPARED BY: Mike Holmes, Planning Director

ATTACHMENTS: Beyond Today Workshop Presentation , DeLand 2050 Final Report

APPROVED BY: Michael Pleus, City Manager, September 21, 2022

SUMMARY/HIGHLIGHT:

On November 11, 2011, the City Commission adopted the 2050 Vision Plan for DeLand. Staff has been referring to this document as applications are reviewed and presented to the Planning Board and the City Commission. Since it is a vision that goes out over 40 years (at the time of approval), over the past 11 years trends and conditions have changed that may impact the Plan. Therefore, staff initiated a review of the plan in 2019 to see if any updates were needed. The 2019 Public Engagement program included public workshops, surveys and interviews to receive input from our residents. The residents were asked if the goals and vision were still the same as they were in 2011. As staff was preparing the update, Covid-19 created a pause on many public events, thus, for all practical purposes stopping our update effort. After the public meetings were halted, there were workshops held with the City Commission and Planning Board in 2020 as well as discussions with several working groups to provide additional insight as to how to update the vision. The update will explore the varying influences that have impacted, not just DeLand but nationally as well.

Tonight's presentation is to help initiate discussion with the City Commission to provide staff with direction for completing the 2050 Vision Plan update. Although currently there are many different influences on our city, the primary discussion needed for the update is to ensure our 2050 vision has remained unchanged or are there adjustments that need to be made. The vision plan should reflect what is desired for the City of DeLand in 2050 and less to do with current events, which is why we are referring to this workshop as "Beyond Today". The overall vision or goals is what is important, with the steps to get there to be developed after the vision is re-established.

The original 2050 Vision Plan is attached for reference. Also, the workshop's PowerPoint presentation is included as an attachment as well.

STRATEGIC PLAN FOCUS AREA/ACTION STEP:

N/A

SUSTAINABILITY:

N/A

FISCAL IMPACT:

N/A

RECOMMENDATION:

The Planning Department requests that the City Commission provide guidance on updating the 2050 Vision Plan.

BACKGROUND/DISCUSSION:

N/A

DELAND 2050 VISION

UPDATE DISCUSSION – BEYOND TODAY

SEPTEMBER 26, 2022

#YouAreDeLand

What is your vision for DeLand?

TODAY'S WORKSHOP AGENDA

- INTRODUCTION
- REVIEW OF CURRENT VISION PLAN
- KEY FINDINGS FROM PUBLIC INPUT
  - PUBLIC ENGAGEMENT 2019
  - WORKSHOPS & WORK GROUPS
- COMMISSION DISCUSSION & DIRECTION
- NEXT STEPS

City of DeLand looks into the future

By Rachel McCray
rmccray@hometownnews mediagroup.com

Over the next few months, the City of DeLand will take

The city has gathered an abundant amount of information from residents thanks to public chalkboards that were set up in Downtown DeLand and surveys given

YOU ARE DELAND

#YouAreDeLand

What is your vision for DeLand?

INTRODUCTION

BEYOND TODAY – ARE WE STILL HEADING TO THE SAME VISION FOR 2050 WE CREATED IN 2010?

VISION NEEDS TO BE A “STATEMENT” WITH A SET OF GOALS THAT DESCRIBES WHAT WE WANT DELAND TO LOOK LIKE IN 30 YEARS

HOW WE GET THERE COMES LATER

YOU ARE DELAND

#YouAreDeLand

What is your vision for DeLand?

VISION STATEMENT:

DELAND'S FUTURE WILL ALLOW GROWTH WHILE PRESERVING HISTORICAL RESOURCES AND NATURAL AREAS, ENCOURAGING BOTH NEW DEVELOPMENT AND REDEVELOPMENT IN THE CORE CITY AREA (GREATER DELAND AREA), ESTABLISHING MIXED- USE CENTERS, SUPPORTING ALTERNATIVE MODES OF TRANSPORTATION AND PROVIDING A DIVERSE AND STRONG ECONOMY, THAT WILL RESULT IN A MORE LIVABLE AND SUSTAINABLE COMMUNITY.

YOU ARE DELAND

#YouAreDeLand

What is your vision for DeLand?

"DELAND 2050"

SUMMARY OF 2050 VISIO

LAND USE

- BROAD CATEGORIES
- SHOWS AREAS AND RANGES OF GROWTH

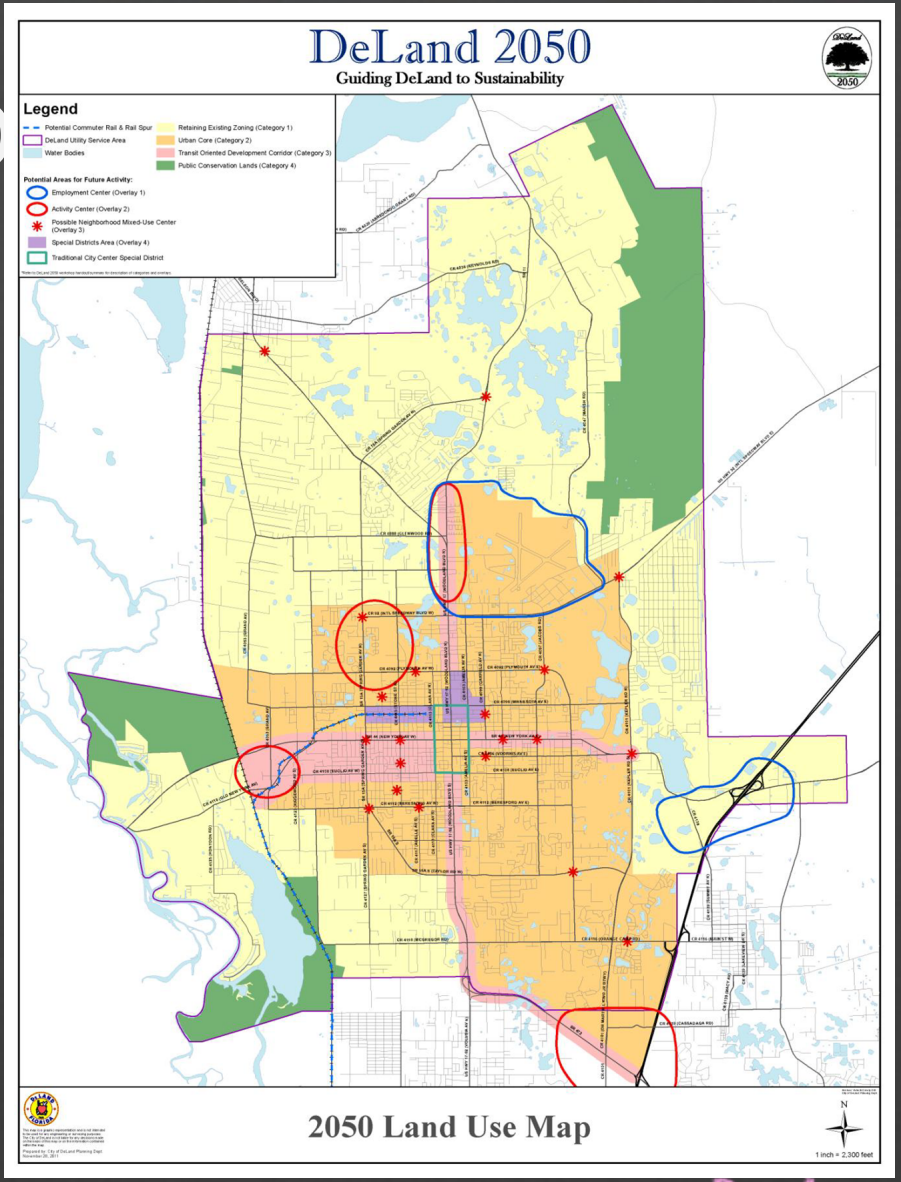

YOU ARE DELAND

#YouAreDeLand

What is your vision for DeLand?

LAND USE GUIDELINES

- Become a **sustainable** community by having a “greener” growth policy requiring the wise use of fiscal and natural resources.
- Create activity and neighborhood centers to encourage **mixed use** and walkability to reduce the number of miles traveled by autos.
- Concentrate development at the core of the City or along **transit-oriented** corridors. The **urban core** is the key area to focus development, by taking advantage of existing infrastructure. This will help encourage transit and lessen traffic congestion.
- Accept styles of **housing** other than single family dwellings to accommodate the shift in demographics.

LAND USE GUIDELINES (CONT)

- Preserve farmland, natural beauty, and critical environmental areas; while providing **recreational** opportunities, as well as parks and **green spaces** for residents.
- Create a **sense of place** by protecting our community character, lifestyle, convenience, historic character and scale and appearance of buildings. Use design standards to preserve sense of place and to improve **gateway** appearances.
- Encourage new development to reflect and protect the **historic character** of the core community by complementing the historic downtown, Stetson University, neighborhoods, other historic areas.

YOU ARE DELAND

#YouAreDeLand

What is your vision for DeLand?

SUMMARY OF 2050 VISIO

TRANSPORTATION

TOD's

- Centers
- Corridors

MODES

- Vehicles
- Trails
- Transit

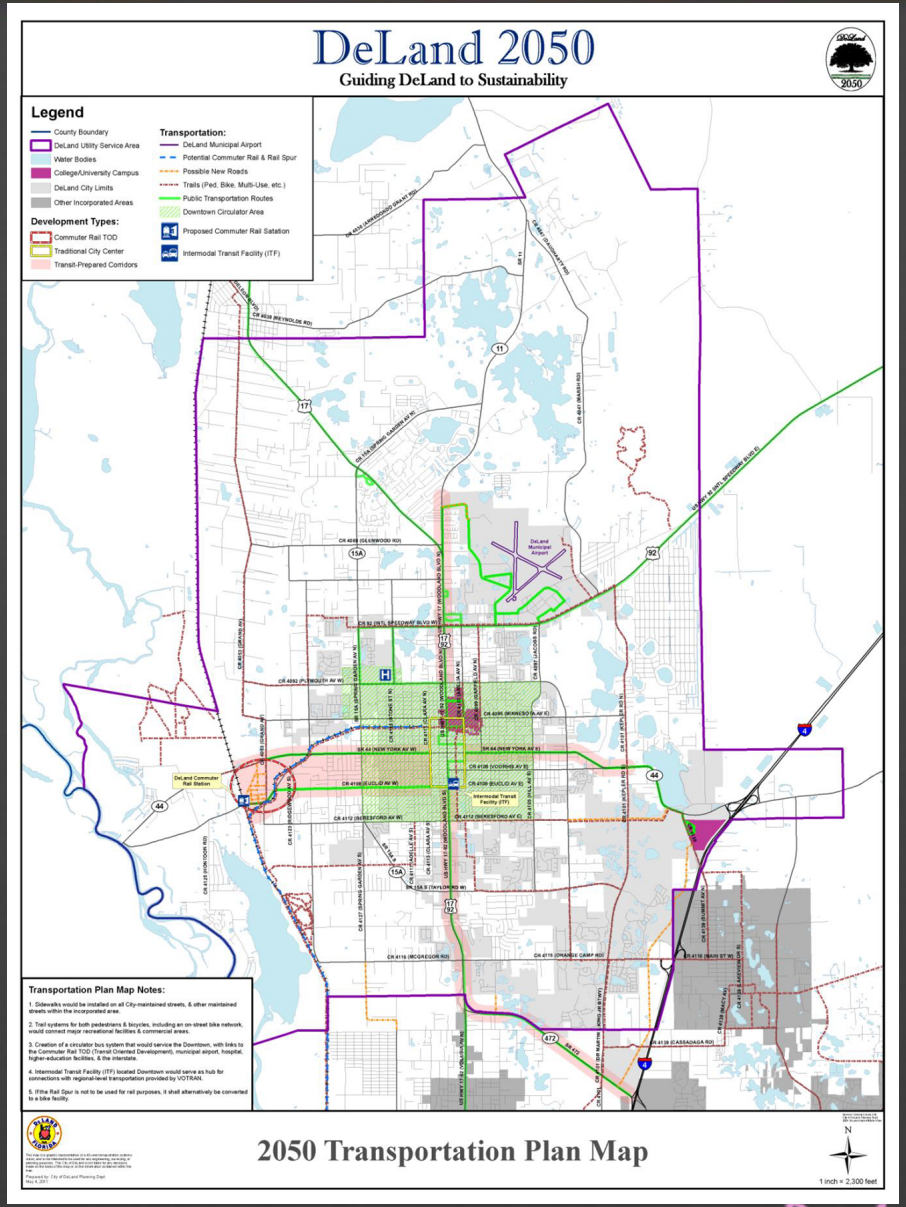

YOU ARE DELAND

#YouAreDeLand

What is your vision for DeLand?

TRANSPORTATION GUIDELINES

- Keep connected with **regional transportation network**, primarily **SunRail** and I-4.
- Provide that new development promotes **transit** styled villages or **transit planned corridors** at identified locations.
- Develop a transit **circulator** to serve downtown and/or localized routes that provide connection to the regional system.
- Continue to manage the **airport** to increase freight capacity and private planes that support the industrial parks.

YOU ARE DELAND

#YouAreDeLand

What is your vision for DeLand?

TRANSPORTATION GUIDELINES (CONT)

- Encourage walking and **walkable** communities by creating neighborhood business centers with improved pedestrian safety, building design and aesthetic measures.
- Encourage **biking** by creating a complete network with trails, lanes, and on-road routes.
- Create **connectivity** by allowing people the ability to move between major developments without necessarily entering the major road network.
- Develop transportation system to manage traffic to prevent **congestion** beyond acceptable levels.

YOU ARE DELAND

#YouAreDeLand

What is your vision for DeLand?

2019 PUBLIC ENGAGEMENT - KEY FINDINGS

GENERAL

- 2050 land use concepts are still valid
- More effort is needed to create a sustainable community
- Economic Development should stress variety and better-quality employment

YOU ARE DELAND

#YouAreDeLand

What is your vision for DeLand?

KEY FINDINGS (CONT)

LAND USE

- Diversity in housing type and housing cost is needed
- Infill development in core city & neighborhoods needs to be encouraged
- Preservation of community character as defined by the physical environment and the social environment is important across all groups.
- In downtown & core areas, design is as important or more important than land use

YOU ARE DELAND

#YouAreDeLand

What is your vision for DeLand?

KEY FINDINGS (CONT)

TRANSPORTATION

- The road & rail concepts of the transportation plan need to be implemented
- Transportation improvements need to stress walking and cycling facilities
- Bus transit is supported and ways need to be found to make it more effective
- Mixed-use development in downtown and transit corridors needs more work

YOU ARE DELAND

#YouAreDeLand

What is your vision for DeLand?

POLICY DISCUSSION BY COMMISSION

- Are the key findings listed above still relevant and do they represent the community sentiment today?
- How do we define community character?
- How will we address affordable housing, given the recent concerns regarding density and smaller lots? Are incentives such as density bonuses, small lots, and small house sizes desirable.
- Where do we want new development?

YOU ARE DELAND

#YouAreDeLand

What is your vision for DeLand?

NEXT STEPS

- PLACE SURVEY ON WEB FOR RESIDENTS TO RESPOND
- REDRAFT OF 2050 VISION PLAN PRESENTED TO COMMISSION
- FINAL VERSION TO COMMISSION FOR ADOPTION
- DEVELOPMENT OF IMPLEMENTATION PROGRAM

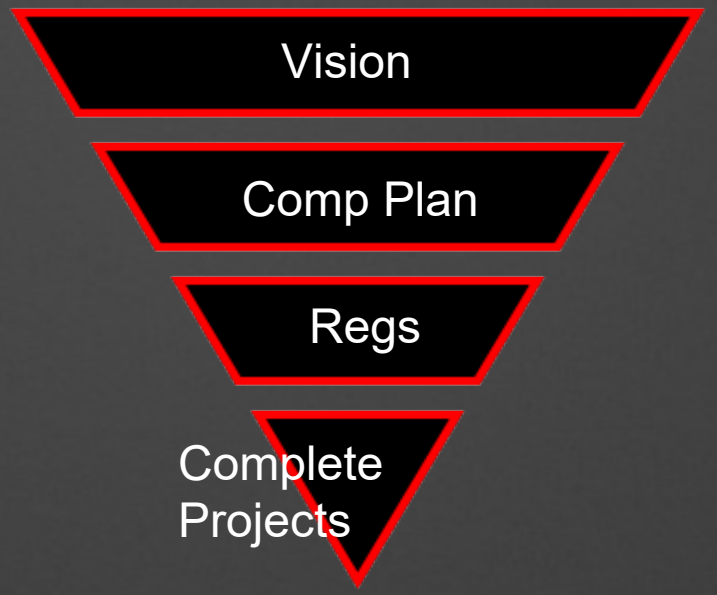

YOU ARE DELAND

#YouAreDeLand

What is your vision for DeLand?

DeLand 2050

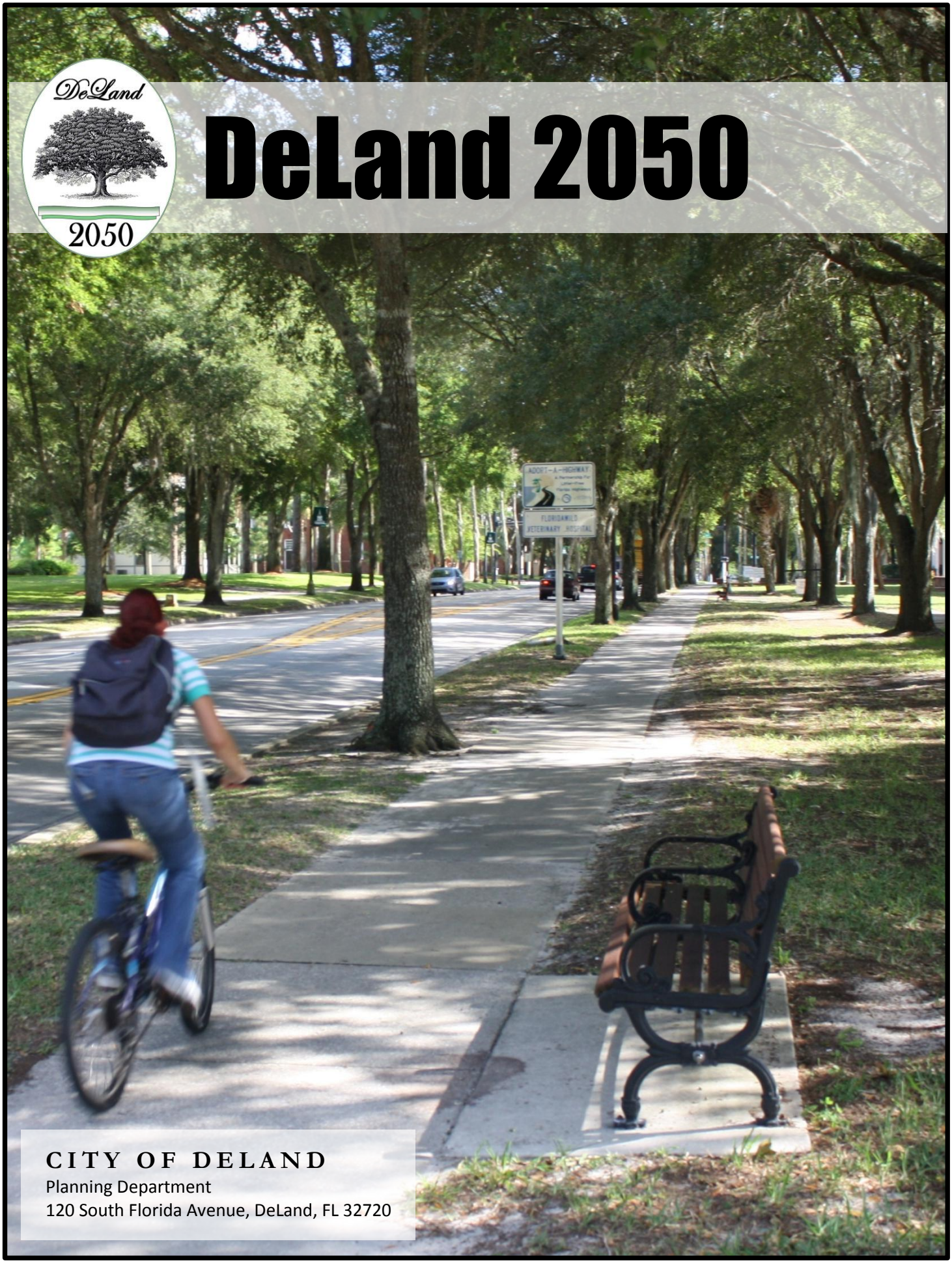

CITY OF DELAND
Planning Department
120 South Florida Avenue, DeLand, FL 32720

DeLand 2050

Table of Contents

I. Introduction to DeLand 2050 **1**

II. Executive Summary **5**
- A. Purpose 5
- B. Public Comments 6
- C. Land Use Plan 2050 (includes map) 6
- D. Transportation Plan 2050 (includes map) 10

III. Land Use Plan 2050 **15**
- A. Overview 15
- B. DeLand 2050 – Initial Concept (includes map) 18
- C. Generalized Environmental Resources (includes map) 23
- D. Public Comments 25
- E. DeLand 2050 (includes map) 26
- F. DeLand 2050 – Guidelines for Implementation 30

IV. Transportation Plan 2050 **33**
- A. Transportation Elements from Original DeLand 2050 33
- B. Public Comments 34
- C. Transportation Plan – DeLand 2050 (includes map) 37
- D. Transportation Guidelines 40

Attachments **44**
- Definitions 44
- Resolution No. 2011-87 45

Adopted November 21, 2011

DeLand 2050

DeLand 2050
Introduction & Purpose

Through the years, there have been numerous discussions as to what the City Commission and Planning Board envision for developing various sections of the City. The Strategic Plan provides some guidance such as gateway aesthetics, sustainability, industrial uses at the airport or more residential in the downtown. Other development scenarios were discussed during various meetings through the years, but nothing was formalized. It is one thing to say “keep DeLand’s small town feel”; but exactly how does a community keep that feeling as the City and the surrounding area continue to grow? The population of the City is already over 27,000 people, with more moving in each year. Developing a framework to guide this growth will become very important as time goes on and the City is faced with new development proposals.

In 2009, the City of DeLand Planning Board and City Commission jointly held four smart growth workshops, to develop a draft of the 2050 Vision for the DeLand area. During the 2009 workshops it was decided to use the Smart Growth principles as the foundation of the DeLand 2050 Plan. The principles of Smart Growth were used in combination with the elements of the Smart Growth Initiative of Volusia County, as well as sustainability concepts in the development of the draft DeLand 2050 Vision.

The City Commission asked that the draft of the DeLand 2050 Vision be presented to the community to seek their input. The Commission wished to include input from residents living in the unincorporated portion of the City water and sewer service area; therefore, the County was invited to participate in the public participation process. At a meeting on March 18, 2010, the County Council agreed to participate. Stetson University also assisted by facilitating the public participation process.

The City visioning process asked what kind of city its citizens would like to see in 2050 and how sustainability can be a part of that vision. Because it can take years to successfully implement a plan or vision in order for it to be successful, the City must start looking ahead towards 2050 now, if the vision is to be realized. The following report presents this vision.

The following statement was created to guide the entire visioning endeavor.

VISION STATEMENT:

DeLand's future will allow growth while preserving historical resources and natural areas, encouraging both new development and redevelopment in the core city area (Greater DeLand Area), establishing mixed use centers, supporting alternative modes of transportation and providing a diverse and strong economy, that will result in a more livable and sustainable community.

The public participation program included a schedule of six workshops held throughout the DeLand area over a two month period. A web page was created to allow widespread public review of relevant materials and the completion of an on-line survey to provide their input if they could not attend one of the workshops. Citizens also sent comments via email directly to staff or through the question and answer program on the City's web page. Any email that was received was incorporated into the final set of comments and included in the presentation of the results of the community input. The results of the public participation program are presented in the "Vision for the City of DeLand, Summary Report for Public Involvement October – November 2010." This report is located on the City's Planning web page.

The public presentations and subsequent completed surveys provided the City with valuable insight as to how the community would like to see the City grow in the future. There were five major themes that emerged through the process:

1) There was a clear endorsement of the smart growth principles used to develop the draft of DeLand 2050, and the City should continue the DeLand 2050 project with the smart growth principles as the foundation.

2) Growth should be focused in already developed areas and the core portion of the City. Some of these growth areas will be suitable for higher intensity development.

3) The areas outside the growth areas, for the most part, should be reserved for environmental protection, open space, and recreation; or maintain existing low-density land use patterns, with the exception of a possible transit oriented development near the train station.

4) There will be a need for other modes of transportation to service the area other than cars, as more people move into the area and to make efficient use of SunRail.

5) Create and/or preserve a sense-of-place through urban design standards, in particular for City Gateway Corridors.

The statements above, as well as the comments from the workshops, are general statements and there may be exceptions to these statements based on specific circumstances. The development of detailed plans for specific areas through Joint Planning Agreements between the City and County or local neighborhood plans inside the City's boundaries will provide opportunities to make any adjustments necessary to address localized concerns. These agreements and plans will be produced over the next several years once the vision is approved.

Putting all this into a format using maps, policies and guidelines which can be used to guide future development in and around the City, should prove beneficial to the public in understanding the direction in which the Commission is aiming. The vision was not intended to become part of the Comprehensive Plan, but would be a stand alone document that could be adopted by the Commission and used as a tool when reviewing development proposals or capital improvement projects, similar to the Strategic Plan.

The City Commission and Planning Board are the "Vision Coordination Team". The Vision Coordination Team is responsible for the development of the City's Vision for 2050 and to provide for local public participation during the vision development process.

The City of DeLand's Planning Department was the coordinator of the community outreach effort. The department conducted meetings and provided background information to the public to help them provide useful comments and input as the vision was created.

The DeLand 2050 Plan is made up of the following sections:

1) **Executive Summary** which consolidates the primary conclusions of the plan.

2) **Land Use** provides the desired land use pattern and implementing guidelines.

3) **Transportation** presents the transportation network and guidelines to supplement the proposed land use pattern.

Page left blank

Executive Summary

Sections:

Purpose 5

Public Comments 6

Land Use Plan 6

Transportation Plan 10

A. Purpose

The City of DeLand is positioning itself as a sustainable community and is stepping forward to meet that challenge. In 2009, the City of DeLand Planning Board and City Commission held four joint smart growth workshops to develop a draft of the 2050 Vision for the DeLand area. During the 2009 workshops the City Commission decided to use the Smart Growth principles as the foundation of the DeLand 2050 Plan. The principles of Smart Growth were used in combination with the elements of the Smart Growth Initiative of Volusia County, as well as sustainability concepts, in the development of the draft DeLand 2050.

The City Commission asked that the draft of the DeLand 2050 vision be presented to the community to seek their input and thus a public participation program was developed. The Commission wished to include input from residents living in the unincorporated portion of the City's water and sewer service area. Therefore, the County was invited to participate in the public participation process; and at their meeting on March 18, 2010, the County Council agreed to participate. Stetson University assisted by facilitating the public participation process.

The City visioning process asked what kind of city its citizens want to see in 2050 and how sustainability can be a part of that vision. The following statement was created to guide the entire visioning endeavor.

VISION STATEMENT:

DeLand's future will allow growth while preserving historical resources and natural areas, encouraging both new development and redevelopment in the core city area (Greater DeLand Area), establishing mixed use centers, supporting alternative modes of transportation and providing a diverse and strong economy that will result in a more livable and sustainable community.

B. Public Comments

The public participation program included: the four initial joint Planning Board/City Commission workshops; six community workshops held throughout the DeLand area over a two month period; a web page created to allow widespread public review of materials and an on-line survey for the public to provide their input if they could not attend one of the workshops. Each of these steps allowed the public opportunities to provide feedback to the City on future development.

Comments were gathered on the concept for DeLand 2050 through both oral and written forums. The comments and conclusions are contained in the document entitled "Summary Report for Public Involvement, October – November 2010". These comments identified everything from specific geographic areas that need to be addressed to encourage development; to preserveing the existing land use pattern; to changing how people travel through the region.

C. Land Use Plan 2050

The City Commission and the Planning Board prepared the first draft of the vision concept, "DeLand 2050". The underlying foundation for the vision plan is the following four elements:

- Recognition of property rights in the current land use patterns for both the City and County;
- Land use patterns based on activity and neighborhood centers to encourage mixed use and walkability;
- Land use patterns that concentrate development at the core of the city or key corridors and that lessen in intensity as one moves outward from the core; and
- Land use patterns based on low impact style development and conservation for the outlying areas.

1. DeLand 2050 Land Use Description

The DeLand 2050 map is intended to present a general land use pattern for the DeLand region to help guide future land use decisions. The suggested land use pattern concentrates development in a high intensity urban core, generally located inside the Greater DeLand Area (GDA) boundary and the southeast area of the City out to I-4.

The overall pattern for the DeLand area depicts a compact core with small neighborhood centers of mixed uses distributed around the City to make it more walkable. Certain roadway

corridors are shown to be redeveloped with higher intensity uses to facilitate the future use of transit and to improve the aesthetics of the City's gateways. Residential density will be increased near activity centers and along the corridors. The map illustrates key employment areas surrounded with support uses as well as residential uses. The operation of SunRail with a station near the current Amtrak station will create a transit village and will also allow for a potential spur into the center of DeLand causing redevelopment of the rail spur into a mixed use area dominated by residential. Unique districts are depicted to foster unique neighborhoods within the larger community that need special regulations or facilities; such as the downtown, rail spur, education, an art village, or historic areas.

2. DeLand 2050 Map

The joint workshops between the Planning Board and the City Commission produced the initial draft of the DeLand 2050 map. Following analysis of the input from the community meetings and the on-line survey, the initial DeLand 2050 map was reviewed and amended. The land use categories described below were not changed between the initial map and the final draft, but the locations and boundaries were adjusted based on public comments. The initial pattern was amended, but the main goal to limit urban sprawl by encouraging higher intensity redevelopment in and around the urban core as well as along several commercial corridors was maintained. Map 1 is the DeLand 2050 plan map.

The map contains four broad categories that allow different densities and types of development:

Category 1 – Retains the existing land use and development pattern in place.

Category 2 – Urban core area where the majority of the new, higher intensity growth will take place.

Category 3 – Transit Oriented Development (TOD) has been placed on areas that have transit or are planned for transit.

Category 4 – Designates areas that are currently under public ownership or that have been placed in conservation easements.

There are also four overlays that allow for a specific mix of uses:

Employment Center – emphasizes business or industrial uses, rather than residential.

Activity Center – emphasizes an intensive mix of uses, including residential. These centers will become major commercial areas.

Neighborhood Center – identifies small mixed use areas that will provide daily goods and services for nearby residents.

Special District – indicates areas that have unique characteristics that the City would like to encourage and allow for expansion of compatible uses.

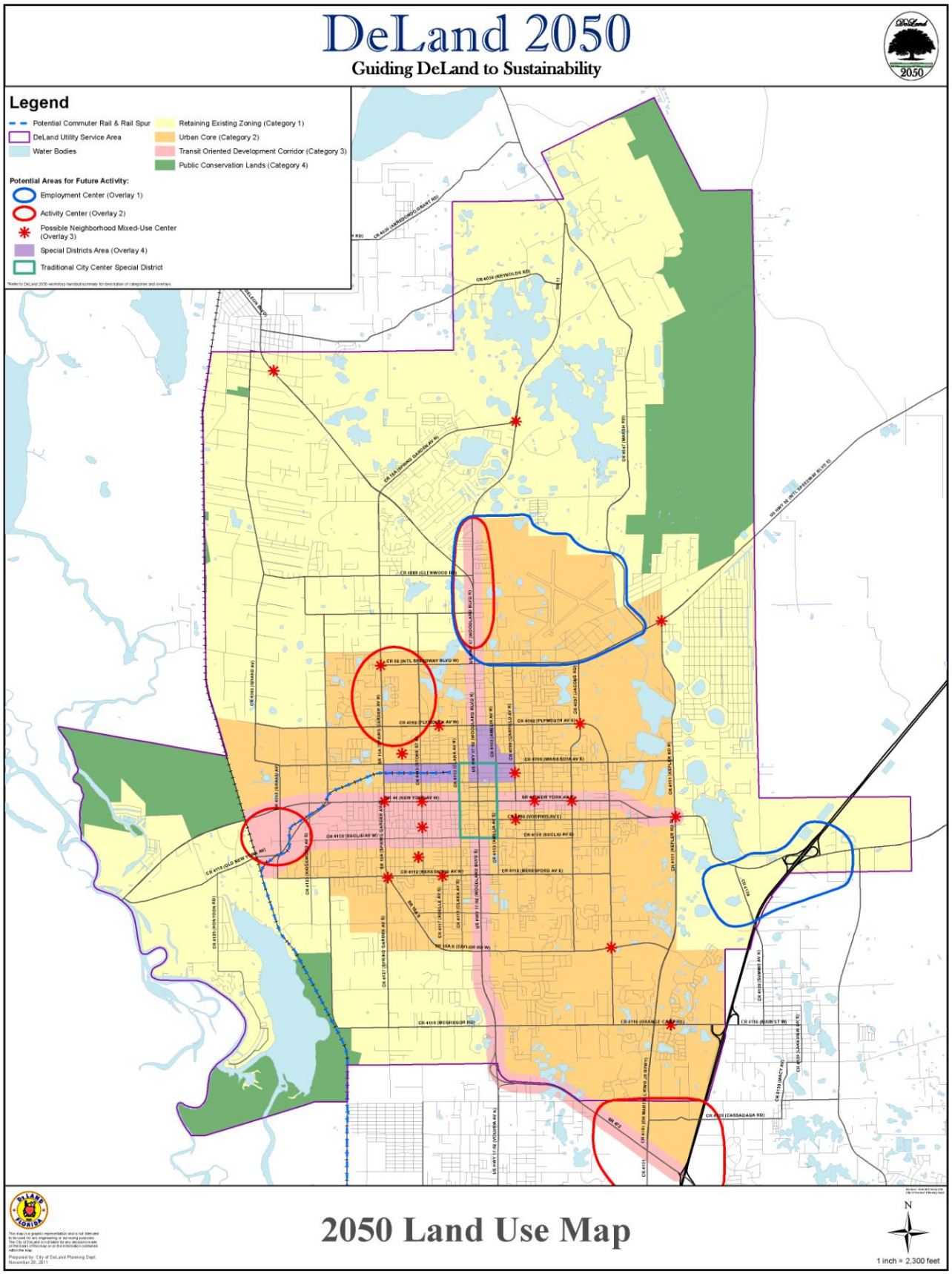
DeLand 2050
Guiding DeLand to Sustainability
Legend
Potential Commuter Rail & Rail Spur
DeLand Utility Service Area
Water Bodies
Retaining Existing Zoning (Category 1)
Urban Core (Category 2)
Transit Oriented Development Corridor (Category 3)
Public Conservation Lands (Category 4)
Potential Areas for Future Activity:
Employment Center (Overlay 1)
Activity Center (Overlay 2)
Possible Neighborhood Mixed-Use Center (Overlay 3)
Special Districts Area (Overlay 4)
Traditional City Center Special District
2050 Land Use Map
N
1 inch = 2,300 feet

3. DeLand 2050 Guidelines

In addition to a map that shows the land use pattern there are also guidelines that help direct the implementation of the plan. Below is an abbreviated version of the guidelines that illustrate the direction the City is moving towards when reviewing new development.

1. Become a **sustainable** community by having a sustainable growth policy requiring the wise use of fiscal and natural resources. The City should be designed to be "greener" through energy and water conservation.

2. Create activity and neighborhood centers to encourage **mixed use** and walkability. Encourage mixed land uses and reduce isolated and single form land uses in order to reduce the number of miles traveled by autos.

3. Concentrate development at the core of the city or at **transit oriented** sites and corridors. The **urban core** is the key area to focus development, maintaining a strong job base and taking advantage of existing infrastructure. Locating higher intensity along select corridors or major centers will encourage transit and lessen traffic congestion.

4. Accept styles of **housing** other than single family dwellings to accommodate the shift in demographics where there will be fewer households with children and provide for households with adult children or aging parents.

5. Preserve **open space**, farmland, natural beauty, and critical environmental areas; while providing **recreational** opportunities, as well as parks and green spaces for residents.

6. Create a **sense of place** by protecting the small town atmosphere, lifestyle, convenience, promotion of historic character and scale of buildings. Protect the important aspects of quality-of-life by having convenient shopping, and promoting appearance of buildings while retaining open spaces and trees. Use design standards to preserve sense of place and to improve **gateway** appearances.

7. Encourage new development to reflect and protect the **historic character** of the core community by complementing the historic downtown; Stetson University; neighborhoods; other historic areas.

D. Transportation Plan 2050

In order for the DeLand 2050 plan to become a reality, there must be a transportation plan to support many of the concepts contained in DeLand 2050. The land use pattern of DeLand 2050 suggests that modes of transportation in addition to the automobile will need to be emphasized to make the vision a reality.

Road construction has become increasingly more difficult due to the cost of construction and the lack of land available to construct new roads or add lanes even if money were available. This has caused local governments to consider other options in lieu of road construction. In order to keep up with population growth, transportation options must be developed to serve the area.

1. Transportation Elements from Original DeLand 2050

The following is a list of transportation projects or concepts that were considered during the development of the initial draft of DeLand 2050.

1. Commuter rail station to develop as a Transit Oriented Development (TOD)

2. Link from commuter rail station into downtown

3. Circulator – local bus network around downtown or localized routes

4. Number of buses (and routes) increased for TOD's and to travel throughout the southwest region

5. Airport used for freight and private planes and to support the industrial park

6. Walking – supported by neighborhood centers and improved conditions

7. Biking – encouraged by adding trails and lanes

8. Road projects:
    a. East Beresford Avenue extension to SR 44
    b. West parkway completed
    c. Kepler Road widened to better accommodate trucks from airport industrial park to I-4

2. Public Comments

During the community workshops for DeLand 2050, several alternatives for improving mobility and travel other than roadways were mentioned by the participants; along with regulatory changes to encourage a multi-modal transportation network. The comments from the workshops and surveys were consolidated to create the basis for a Transportation Plan to support the DeLand 2050 plan. These comments have been grouped into three different categories: general, facilities, and Transit Oriented Development (TOD).

a. Transportation – General

This section presents general features and issues that make up the transportation system. Area residents are concerned about safety of bicyclists and pedestrians, traffic congestion and making sure there is easy access to downtown. It was also pointed out that automobiles are the preferred means of traveling, at least for the near term.

b. Transportation – Facilities

This section lists the actual modes of transportation desired by the community as relayed by their comments.

c. Transit Oriented Development

Because the DeLand area is not serviced extensively with transit, this section describes programs and facilities that will need to be put in place to help support transit to make it feasible in the future.

3. DeLand 2050 Transportation Plan & Map

The DeLand 2050 Transportation Plan supports the land use pattern of the DeLand 2050 Plan. The transportation plan emphasizes modes of transportation other than the automobile without eliminating the importance of the automobile. Providing options to area residents is critical if the DeLand area is to maintain its position as an employment and residential hub. This section of the plan outlines the transportation system that allows the City to reach its 2050 vision. In addition to a map that shows the transportation network there are also guidelines that help direct the implementation of the transportation plan. Map 2 is the DeLand 2050 Transportation Plan map.

4. Transportation Plan Guidelines

In addition to a map that shows the transportation system there are also guidelines that help direct the implementation of the plan. Below is an abbreviated version of the guidelines:

1. Keep connected with **regional transportation network**, primarily **SunRail** and I-4 through **links** from the local network.

2. Provide that new development promotes **transit** styled villages and **transit planned corridors** at identified locations; such as the commuter rail station area developing as a Transit Oriented Development (TOD).

3. Develop a transit **circulator** to serve downtown and/or localized routes that provide connection to the regional system.

4. Continue to manage the **airport** to increase freight capacity and private planes that support the industrial parks.

5. Encourage walking and **walkable** communities by creating neighborhood business centers with a mix of uses and improving pedestrian atmosphere through safety, building design and aesthetic measures.

6. Encourage **biking** by constructing a complete network with trails, lanes and on-road routes.

7. Create **connectivity** by allowing people the ability to move between major developments without necessarily entering the major road network.

8. Establish a **multi-modal transportation** district to provide an interconnected transportation system to serve the urban core area.

9. Develop transportation system to manage traffic to prevent **congestion** beyond acceptable levels.

DeLand 2050

Guiding DeLand to Sustainability

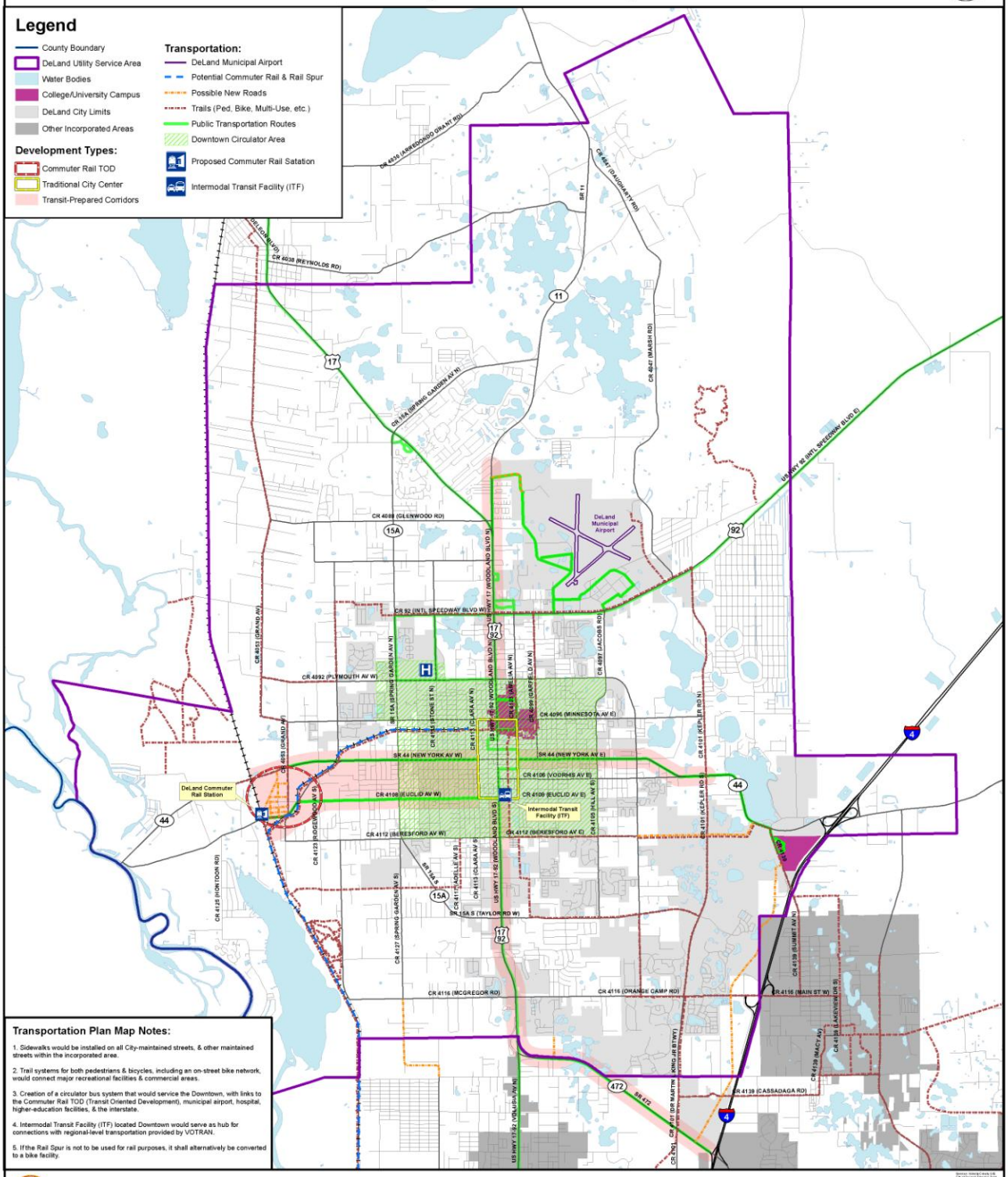

2050 Transportation Plan Map

Page left blank

Land Use Plan 2050

Sections:

Overview 15

Land Use Plan 2050 18

Environmental Resources Map 23

Public Comments 25

DeLand 2050 26

Guidelines for Implementation 30

A. Overview

The City of DeLand is positioning itself as a sustainable community and is starting now to take steps to meet that challenge. The City designed a visioning process that determined what kind of city its citizens will want to see in 2050 and how sustainability can be a part of that vision. The following statement was created to guide the entire visioning endeavor.

VISION STATEMENT:

DeLand's future will allow growth while preserving historical resources and natural areas, encouraging both new development and redevelopment in the core city area (Greater DeLand Area), establishing mixed use centers, supporting alternative modes of transportation and providing a diverse and strong economy that will result in a more livable and sustainable community.

Smart Growth Direction

During the 2009 workshops the City Commission decided to use the general Smart Growth principles in combination with the elements of the Smart Growth Initiative of Volusia County as the foundation of the DeLand 2050 Plan. Below are the ten guiding principles that make up Smart Growth followed by the key elements.

Smart Growth Principles:

1. Mix land uses – the mixing of land uses (commercial, residential, recreational, educational, public, open space, and others) can encourage foot and bike modes of transportation.

2. Take advantage of compact building design – use less land for development. This includes building size as well as parking; land consumption for buildings cannot be used for open space.

3. Create housing opportunities and choices – providing quality housing for people of all income levels and age groups.

"Foster distinctive attractive communities with a strong sense of place…"

4. Create walkable communities – pedestrian-friendly features range from providing shade for sidewalks to master planning development types.

5. Foster distinctive, attractive communities with a strong sense of place – opposite to strip development that does not instill community pride.

6. Preserve open space, farmland, natural beauty, and critical environmental areas; provide recreational opportunities, and guide new development into existing communities.

7. Provide a variety of transportation options – to help eliminate congestion in the transportation system.

8. Strengthen and direct development to existing communities – development directed to communities already served by infrastructure, use resources of existing neighborhoods and maintain value of public and private investment.

9. Make development decisions predictable, fair, and cost effective – to be able to meet the future demand for development; the concept must be accepted and endorsed by private sector. Predictability assures developers their projects can be approved.

10. Encourage community and stakeholder collaboration in development decisions – concept must be consistent with community's own sense of how and where the growth should happen.

Smart Growth Initiative:

In 2004, a county-wide Smart Growth Implementation Committee was established that reviewed the principles of Smart Growth in relation to the issues facing Volusia County. That committee produced a report that broke the recommendations into seven subject areas or elements (listed below), 15 "keystone" recommendations and 49 additional recommendations that would implement the principles of Smart Growth in Volusia County. The entire report is included in the Smart Growth Workshop notebook and on the City's Planning web page.

Key Elements from Smart Growth Initiative Report (Volusia Co.)

1. Protect the Environmental Core

2. Appropriately direct development
3. Develop Livable communities
4. Ensure the continued existence of agriculture
5. Meet the Infrastructure needs of growth
6. Integrate education
7. Integrate economic development

Initial Strategies:

The presentations and discussions at the Smart Growth workshops provided the initial participation to establish the basis for the plan that would be reviewed by the public for their input. Using the vision statement, the City Commission and the Planning Board prepared the first draft of the vision which is referred to as "DeLand 2050". The DeLand 2050 plan was established on these four major traits:

- Current land use patterns for both the City and County that recognizes property rights;
- Land use patterns based on activity and neighborhood centers to encourage mixed use and walkability;
- Land use patterns that concentrate development at the core of the city or key corridors and lower intensity outwards; and
- Land use patterns based on low impact style development and conservation for the outlying areas.

Live/Work Townhomes

Below are general comments that were stated at the joint City Commission/Planning Board workshops that were also incorporated into the initial draft concept:

- The market for housing in and around the City has primarily been for detached single family dwellings. Education of developers, realtors, and public will be required to begin the move to accept other styles of housing, to accommodate the shift in demographics where there will be fewer households with children and provide for adult children or aging parents.

- Agreement that the City should be working towards ending urban sprawl and encouraging a compact development pattern that's designed to be greener.

- Due to a surplus of existing houses and empty lots, the City should be selective in the approval of more residential land.

- Protection of environmental areas is important as well as maintaining parks for residents as a quality of life issue.

- Urban core is the key area to focus new development, with maintaining a strong job base throughout the region which will also take advantage of existing infrastructure.

- Include protection of agriculture with discussion of protecting "green" spaces.

- Develop a transportation system that includes all modes of transportation for the area because roads alone will not handle the needs of the community.

"Create walkable communities – pedestrian-friendly features range from providing shade for sidewalks to master planning development types."

A land use map was conceived as a way to incorporate the desirable traits of the various scenarios discussed during the joint workshops. The DeLand 2050 map, as it is now called, was created to illustrate the resulting land use pattern. As the vision was developed, a set of guiding principles that can be used to implement the vision by suggesting future Comprehensive Plan amendments and changes to the land development regulations was also developed.

The second component of DeLand 2050 is the Transportation Plan that presents transportation options and alternatives that will support the DeLand 2050 land use plan. This portion of the plan is presented in Chapter IV.

B. Land Use Plan 2050 – Initial Concept

Description of Initial Concept:

The initial concept was presented at six community workshops for public comments. The land use pattern in this initial concept concentrates development in a high intensity urban core, generally located inside the Greater DeLand Area (GDA) boundary and the southeast area out to I-4. This pattern helps to limit urban sprawl by

encouraging higher intensity redevelopment in and around downtown and also along several commercial corridors. Certain sections of suburban development may be suitable for redevelopment (or retrofitting) to allow different housing types throughout the community, while other areas should remain as currently developed.

Compact core with scattered neighborhood centers of mixed-uses

In this concept, the overall pattern for the DeLand area retains a compact core with scattered neighborhood centers of mixed uses to make the City more walkable. Selected corridors are to be redeveloped with higher intensity uses to facilitate the future use of transit. Residential density is increased near business or activity centers and along the selected corridors. Key employment areas are surrounded with support uses as well as residential uses. The SunRail station near the current Amtrak station is to be developed as a transit-oriented development along with an assumption that the rail spur could be used for a link into the center of DeLand which would cause a redevelopment of the termination area into a mixed use area dominated by residential uses. Unique districts are created to provide for or foster unique neighborhoods within the larger community that need special regulations or facilities, such as the downtown; rail spur, educational, an art village, or historic areas.

DeLand 2050 will allow for all types of housing; single-family homes, townhomes, apartments, condos, duplexes and smaller lots. The vision also suggests the concept of adding additional dwelling units to existing units such as mother-in-law or garage apartments.

"DeLand 2050 will allow for all types of housing: single-family homes, townhomes, apartments, condos, duplexes, and smaller lots"

Population forecasts indicate that the utility service area will see an increase of almost 50,000 new residents residing in approximately 22,000 new dwelling units by 2050. The projected 2050 population for the entire area covered by DeLand 2050 is approximately 105,000. This initial concept for the DeLand 2050 Plan assumes the majority of these new residents are to be housed inside the Greater DeLand Area (GDA) or the existing city limits and steered away from the rural, agriculture and environmental areas. To help distribute these units, the GDA was expanded to include the southeast area outside of the current city boundary. This area was chosen because it is adjacent to the interstate and will receive the most demand for development outside of the GDA. The amount of land area inside the GDA is 16,800 acres (the GDA with expanded southeast area contains a total of 21,200 acres); total acres inside the utility service area (including the GDA) is approximately 57,200. Approximately 37% of the utility service area is targeted for possible increase in density, while the remaining 63% is projected to maintain its current density.

DeLand 2050 Initial Concept Map

The joint workshops between the Planning Board and the City Commission produced the initial draft of the DeLand 2050 map. The map is intended to present the general land use pattern for the DeLand region in 2050. The development categories and overlays were overly expansive to be seen easily and generate discussion. The original concept map is found on page 21 of this report.

The map contains four broad categories that allow different densities and types of development and four overlays with specific functions. The categories and overlays are described below. these same categories and overlays are also used in the final map design. The categories cover large expanses and will ultimately be broken down into localized or neighborhood plans that display specific uses that reflect the intent of the specific category or overlay.

DeLand 2050 Map Categories:

Category 1 (Yellow) – Retains the existing zoning in place, and may allow increases in density if it conforms to specific criteria. Such criteria may include: appropriate location, retain over 30% open space, protection of existing uses, availability of existing infrastructure (without expansion or extensions), no irrigation allowed, contributes to sustainability, and increases economic opportunities (not residential).

Category 2 (Orange) – Urban core area where the majority of the new growth will take place. The boundary shown on the map corresponds to the boundary of the Greater DeLand Area (GDA). This boundary was chosen, because since the 1970's, the GDA was slated to be served with urban services. This category also includes the southeast area to I-4, which encompasses Victoria Park.

Category 3 (Pink) – Transit Oriented Development (TOD) areas have been placed along several roadways and the area between the commuter rail station and downtown. A TOD is an area that will encourage higher density and a mixture of uses, in order to make a transit system more efficient for the DeLand area. These areas will see a transition from the current development pattern to a more transit friendly pattern, over time.

Category 4 (Green) – Designates areas that are currently under public ownership in conservation easements.

DeLand 2050 Map Overlays:

There are also four overlays that indicate certain areas for specific types of mixed use development:

Overlay 1 – Employment Center, designated and enclosed by a blue line, is an overlay that emphasizes business or industrial uses, rather than residential. Criteria could be developed to protect business development and keep out incompatible residential uses.

Overlay 2 – Activity Center, designated and enclosed by a red line, is an overlay that emphasizes an intensive mix of uses, that are compatible with and include residential. These centers will become the major commercial areas.

Overlay 3 – Neighborhood Center, designated by the red asterisk, is an overlay that identifies small mixed-use areas that will provide primarily daily goods and services for nearby residents. Although a symbol has been used, the designation on the maps are examples of locations and are only intended to show that these centers could be placed at many locations where the community would want to establish a neighborhood center. The asterisk is only intended to identify the general area that will be studied, to determine whether or not a neighborhood center should be located in the vicinity.

Overlay 4 – Special District, are placed on areas that have unique characteristics where the City would like to encourage the current use and allow for expansion of compatible uses. Examples of these Special Districts are the area around Stetson University, an artists' village, marinas, and rural clusters. Each one of these districts will have unique issues, so one set of regulations will not be appropriate. Special districts will be individually named and specific regulations will be developed to help maintain the uniqueness of that particular district.

Each special district will be planned separately. An example of this is the downtown and the surrounding area that would transform as the downtown expands. The name for the downtown special district is Traditional City Center. Policies will be developed to allow new growth and development while protecting the existing character of the downtown.

"Neighborhood Center …small mixed-use areas that will provide primarily daily goods and services for nearby residents."

Special District for the downtown – Traditional City Center

DeLand 2050

Guiding DeLand to Sustainability

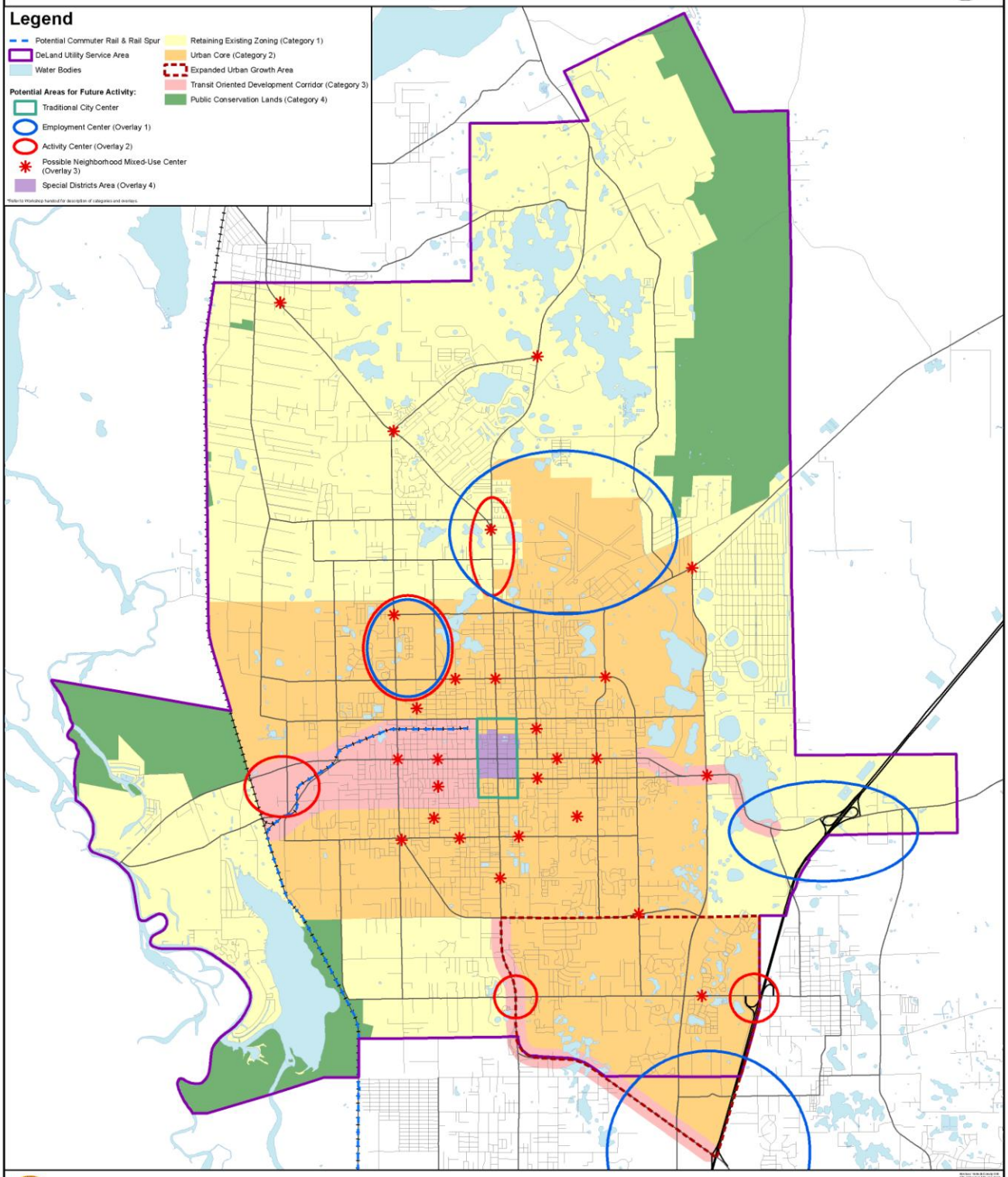

Initial Concept

C. Generalized Environmental Resources Map

A second map was developed for the purpose to illustrate areas that contain environmentally-sensitive lands and special habitat. Any new development in these areas will be reviewed to insure that the protection of the natural resources will be addressed. The lands identified on the environmental resources map contain features that are already protected by regulations and staff is recommending that these protections remain and possibly be expanded to provide additional criteria for development adjacent to these areas for added protection.

The areas shown on this map also include some of the areas for agriculture, although not all areas under agricultural production may be included. The map is intended to show that agriculture uses are included and encouraged to remain as part of the City's vision, especially in the outlying areas. As plans are developed in areas identified on the environmental resources map policies, will be developed to address how the resources will be protected.

Environmentally-sensitive lands and special habitat

DeLand 2050

Guiding DeLand to Sustainability

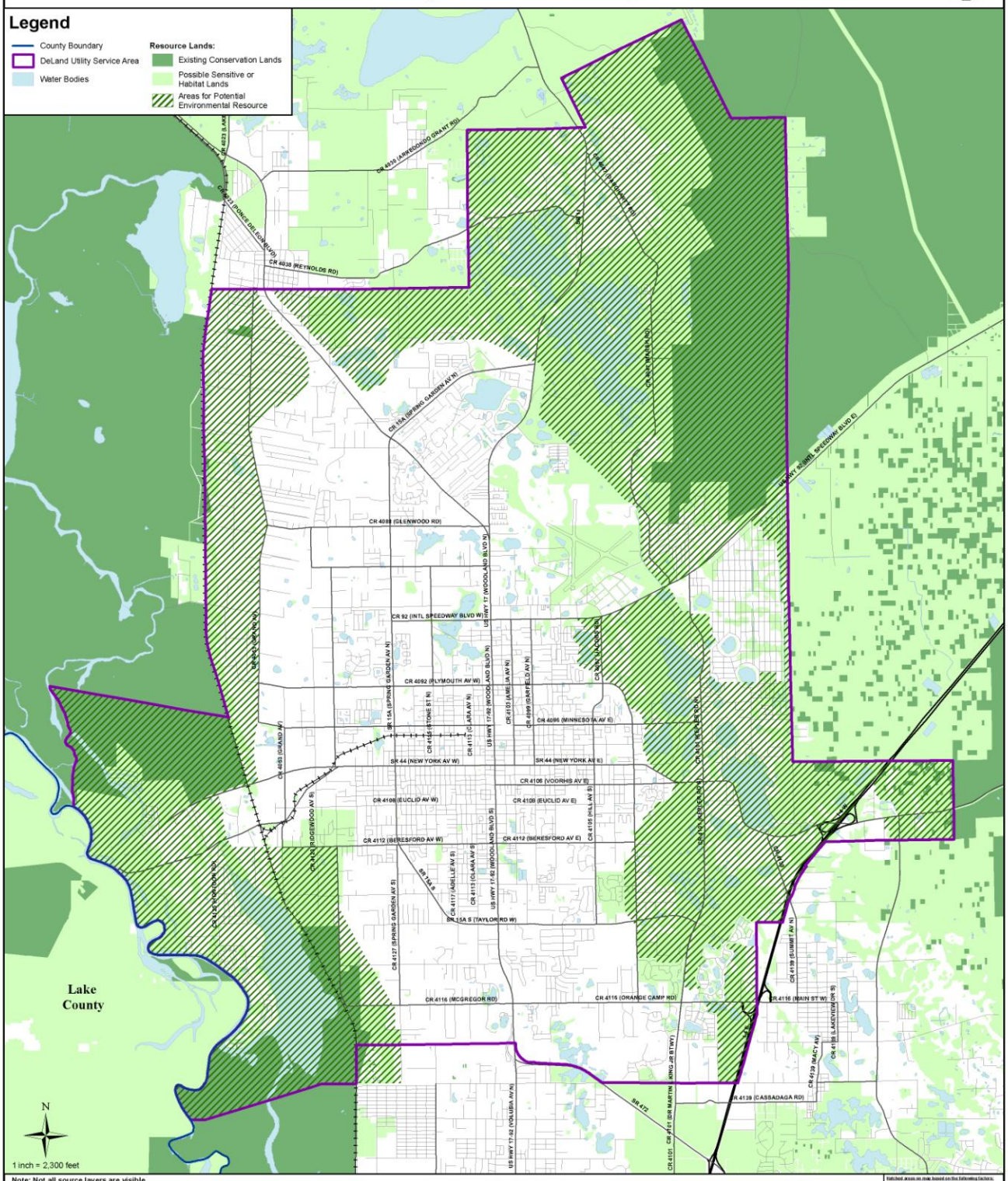

D. Public Comments

After the initial concept for DeLand 2050 was presented at the community workshops, the following comments were gathered through oral and written forums. For the complete list of comments and conclusions refer to the document entitled "Summary Report for Public Involvement, October – November 2010". These comments identified issues and areas that need to be addressed to either encourage development or redevelopment or to ensure the current intensity is maintained. The following is a list of the comments grouped into general categories.

1. **Sense-of-place –** majority of respondents indicated that the small town atmosphere, lifestyle, convenience, and scale of buildings were the most important qualities. The protection of these qualities was foremost in all comments received.

2. **Green/open space –** should be located in the urban core, as well as transition areas and beyond. Protecting natural areas and open space both inside and outside urban areas was listed throughout the comments. Landscaping and tree protection were also important.

3. **Downtown –** both the businesses & the historic district should be protected and the area promoted as a key component of the DeLand region. Many comments concerning the downtown included preference for the special events which included parades.

4. **Sprawl –** was mentioned fairly often and most comments leaned towards reducing new development far away from the existing developed areas. New development in the core area was the preferred location and in select centers for higher intensity.

5. **Infill development –** respondents were suggesting that new growth should be encouraged to locate in the existing developed areas through infill of undeveloped lands and the reuse or better use of existing buildings. Creation of mixed-use developments were preferred to the standard single use projects.

6. **Creating connectivity –** respondents wanted to allow people the ability to move between major developments without necessarily entering the major road network. Completing sidewalks & trails between destinations and neighborhoods; thus creating walkable destinations

"Green/open space should be located in the urban core, as well as transition areas and beyond."

"…new growth should be encouraged to locate in existing developed areas through infill."

7. **More development** along corridors and in core, if transit is improved – respondents agreed that higher intensity could be located along select corridors or major centers if there was no additional traffic congestion. Improving transit was listed quite often as a means of dealing with some of the congestion. Protection of existing residential was also very important when establishing these high intensity corridors or centers.

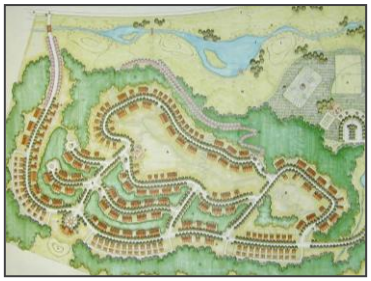

Cluster or compact development

8. **Rural & urban uses –** there was no true distinction between the respondents that wanted the rural uses separate from the urban uses and the ones that did not mind a blending. The actual decision will be an individual decision and dependent on the neighborhood being studied.

9. **Good quality-of-life** – as would be expected, this term meant different things to different people. Many desired to include open spaces and trees as an important aspect of quality of life. Other respondents called for walking trails and appearance of gateways and buildings to be a valuable part of their quality of life; while others looked for convenient shopping.

10. **Cluster or compact development** – this concept did appeal to many because it could provide more open space but responses were also very clear that it should not be required everywhere.

E. DeLand 2050

DeLand 2050 Map (land use pattern):

As presented earlier, the DeLand area will see an increase of almost 50,000 new residents residing in approximately 22,000 new units for a total population estimate of 105,000 by 2050. The majority of the new residents are to be housed inside the Urban Core (Category 2) and steered away from the rural, agriculture and environmental areas. The DeLand 2050 map will be used as a visual guide for determining the appropriate land uses, such as during Comprehensive Plan amendment discussions.

The input staff received from the community meetings and the surveys were reviewed to determine what statements gained a consensus. These statements were identified and grouped into categories in order to revise the DeLand 2050 plan. From this review, it was clear that there were almost as many comments concerning transportation as there were on land use issues. Therefore, the plan was divided into two sections: land use and transportation. The land use discussion will

continue in this section while transportation is discussed in the next section.

The land use categories are the same as presented under the original concept, but locations and boundaries of these categories have been adjusted based on public comments. The revised map is attached.

The following are the major modifications that have been made to the initial concept map to create the second map:

1. **Transit Oriented Development (TOD)** has been placed at the commuter rail station and downtown. The TOD concept is also being used along several roadways and the area between the commuter rail station and downtown. These corridors are referred to as transit-planned corridors.

   TOD added for:
   a. US 17/92 north from Plymouth to SR 11 (Carter Road)
   b. US 17/92 south from Euclid Ave to Taylor Road
   c. SR 44 from Amelia Ave to Blue Lake Ave

   TOD deleted for:
   a. Rail spur
   b. SR 44 from east of Kepler Road to CR 4139

2. **Removed Special District** boundary for downtown and kept Traditional City Center designation as a specific area to be planned as a Special District.

3. **Added Special District Area** designation for:
   a. Stetson University
   b. Rail Spur area

4. **Removed Employment Center** from hospital vicinity; kept Activity Center designation

5. **Deleted Activity Center** designation from:
   a. Intersection of US 17/92 and Orange Camp Road
   b. I-4 interchange at Orange Camp Road

6. **Expanded Category 1** (retaining existing zoning) & **reduced Category 2** (urban core) at:
   a. North of W. Plymouth Avenue, between RR track and Hazen Road
   b. South of W. Beresford Avenue, between RR track and Fatio Road

7. Adjusted size of Employment Center:
   a. around the intersection of I-4 and SR 44
   b. at DeLand airport

8. Changed Employment Center designation to Activity Center for the area west of the I-4 interchange with SR 472.

9. Utility Service Area boundary corrected in the southern boundary west of US 17/92 to match utility provider boundary.

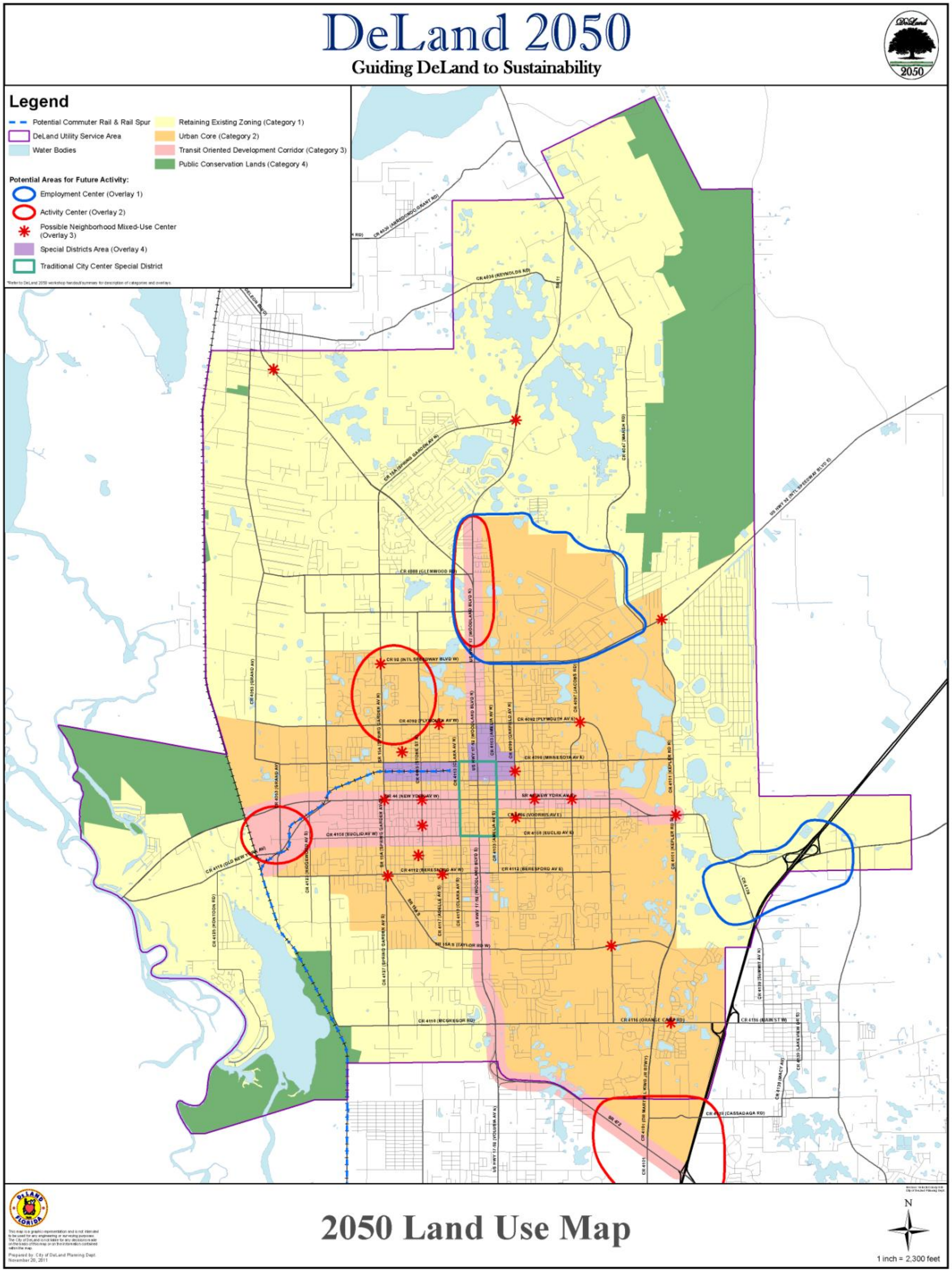
DeLand 2050
Guiding DeLand to Sustainability
Legend
Potential Commuter Rail & Rail Spur
DeLand Utility Service Area
Water Bodies
Retaining Existing Zoning (Category 1)
Urban Core (Category 2)
Transit Oriented Development Corridor (Category 3)
Public Conservation Lands (Category 4)
Potential Areas for Future Activity:
Employment Center (Overlay 1)
Activity Center (Overlay 2)
Possible Neighborhood Mixed-Use Center (Overlay 3)
Special Districts Area (Overlay 4)
Traditional City Center Special District
2050 Land Use Map
N
1 inch = 2,300 feet

F. DeLand 2050 Land Use Guidelines for Implementation

The following guidelines will be used in combination with the DeLand 2050 map and the City's Strategic Plan when reviewing new development proposals and Comprehensive Plan amendments.

Land Use Guidelines:

The DeLand area is not an isolated, independent jurisdiction, but part of a large interconnected metropolitan region. These regional influences will impact how the DeLand area will grow. Learning how to interact and become involved in the region will be crucial as the City approaches 2050. These guidelines will help with decisions on how the DeLand area will develop.

"Become a sustainable community by having a sustainable growth policy requiring the wise use of fiscal and natural resources."

1. Become a sustainable community by having sustainable growth policies requiring the wise use of fiscal and natural resources. The City should be designed to be "greener" through energy and water conservation.

2. Create activity and neighborhood centers to encourage mixed use and walkability. Promote a healthy community with beautiful and safe neighborhoods, with easily accessible public space or green space and bike and pedestrian friendly design.

3. Concentrate development in the urban core region or at transit oriented sites and corridors. The urban core is the key area to focus development, maintain a strong job base and take advantage of existing infrastructure.

4. Create housing opportunities and choices by providing quality housing for people of all income levels and age groups.

5. Accept styles of housing other than single family dwellings to accommodate the shift in demographics where there will be fewer households with children and provide for households with adult children or aging parents.

6. Due to a surplus of existing residential and commercial structures, along with empty lots, the City should be selective when considering requests for additional commercial and residential land.

7. Preserve open space, farmland, natural beauty, and critical environmental areas; provide recreational opportunities; and guide new development into existing communities.

8. Allow new appropriate agriculture to be established as well as parks and green spaces for residents.

9. Encourage mixed land uses and reduce isolated and single form land uses in order to reduce the number of miles traveled by autos.

10. Take advantage of compact development design that uses less land for building size as well as parking. Appropriate locations for cluster or compact development are dependent upon neighborhood qualities.

11. Use design standards to preserve sense of place and to improve gateway appearances.

12. Create a sense of place by protecting the small town atmosphere, lifestyle, convenience, and historic character of DeLand. Maintain the current scale of buildings and not allow new construction to overshadow existing architecture. Protect the important aspects of quality-of-life by having convenient shopping, promoting appearance of buildings while retaining open spaces and trees.

13. Oppose new strip development that does not instill community pride and encourage the rehabilitation of the older commercial areas.

14. Encourage new development to reflect and protect the historic character of the core community by complementing the historic downtown; Stetson University; neighborhoods; other historic areas.

15. The urban core should contain open space to be enjoyed by the public as well appropriate landscaping with trees as a main focal point.

16. Protect the businesses and the historic portion of downtown so it remains a key component of the DeLand region.

17. Encourage new growth to locate in the existing developed areas through infill of undeveloped lands and the reuse or better use of existing buildings.

"Preserve open space, farmland, natural beauty, and critical environmental areas…"

"The urban core should contain open space to be enjoyed by the public…"

18. Creation of mixed-use developments is preferred to the standard single use projects.

19. Locate higher intensity along select corridors or within major centers to encourage transit and to lessen traffic congestion. Establishing the high intensity corridors or centers will not degrade existing residential.

Transportation Plan 2050

Sections:

Transportation Elements 33

Public Comments 34

Transportation Plan 37

Transportation Guidelines 40

Introduction

Several modes of transportation need to be emphasized throughout the region to make the DeLand 2050 vision a reality. In recent years, road construction has become increasingly difficult due to the cost of construction, lack of funding, and the lack of land available to construct new roads or additional lanes. This has caused local governments to consider other options, in lieu of road construction, to accommodate the transportation needs of a growing population. Although automobile usage will continue as a primary means of transportation, the 2050 land use vision is based on the assumption that additional transit options will be needed.

A. Transportation Elements from Original DeLand 2050

The following is a list of transportation projects or concepts that were used during the development of the initial draft of DeLand 2050.

1. Commuter rail station to develop as a Transit Oriented Development (TOD)
2. Link from commuter rail station into downtown
3. Circulator – local bus network around downtown or localized routes
4. Number of buses (and routes) increased for TOD's and to travel throughout the southwest region of Volusia County
5. Airport will be used for freight and private planes and to support industrial park
6. Walking – supported by neighborhood centers and improved conditions
7. Biking – encouraged by adding trails and lanes

8. Road projects:
    a. East Beresford Avenue extension to SR 44
    b. West parkway completed

B. Public Comments

During the community workshops for DeLand 2050 several alternatives for improving mobility and travel other than roadways were mentioned by the participants; as well as regulatory changes to encourage a multi-modal transportation network. The definition for multi-modal transportation network or district was discussed at the workshops and is attached to the end of this section to allow the reader to become familiar with the terminology. The comments from the workshops and surveys were consolidated to create the basis for a Transportation Plan that will support the DeLand 2050 plan. These comments were then grouped into three different categories; general, facilities, and Transit-oriented Development (TOD).

"…area residents are concerned about safety of bikes and pedestrians…"

1. Transportation – General

Below are comments that address general aspects of the transportation system that influenced the final DeLand 2050 plan. The list shows that area residents are concerned about safety of bikes and pedestrians, congestion and making sure there is easy access to downtown. These comments provided guidance in developing the overall transportation plan for DeLand 2050.

1. Need hub and spoke type of transportation network, with smaller modes of public transportation providing connection

2. Need to protect downtown and provide transition from intense development along the routes to downtown

3. Do not create sprawl with new modes of transportation

4. Protect residences from traffic from heavy commercial or multifamily

5. Walkability and pedestrian friendliness

6. Traffic in core area, too congested (reduce congestion)

7. Don't forget independent travel bikes/walking

8. No coherent unification of pedestrian, bike, transit facilities

9. Trucks driving downtown (stated as a problem to be addressed)

10. Cars will be the preferred means at least for the near- term

Parking Garages

2. Transportation – Facilities

This section lists the physical features of the transportation options mentioned in the comments. The options listed first, simply had the most discussion or mention; and the order of presentation is not indicative of the ultimate priority that will be developed or addressed. The complete list of comments is contained in the document entitled "Summary Report for Public Involvement, October - November 2010".

The first category is **public transit**, which includes everything from bus, trolley, shuttle or mini-bus and commuter rail (SunRail). Public transit also included addressing areas to be served by transit (to be discussed in more detail in the transit oriented development section).

A majority of the comments dealt with the current lack of public transit and indicate that a major effort needs to be made to make transit a reality. Public transit will need to be more efficient, serve a large area with higher densities, and include desirable destinations. The predominant type of public transit that was mentioned was a bus. There was also a considerable discussion of a downtown circulator or trolley to get people around as the downtown continues to grow. A smaller vehicle than the standard size bus was suggested as a better fit for the DeLand area. SunRail was mentioned as a means to travel regionally and to provide a link to the downtown.

"Public transit will need to be more efficient and serve a large area with higher densities, and include desirable destinations."

The second category is **bicycles**, which includes the range of providing more trails to equipping buses with bike racks. To encourage biking, improvements were suggested such as separate facilities including parking and increased safety such as lighted trails.

The third category is **walking**, which comprises improving safety and adding sidewalks. Also improving the amenities such as shade and benches were mentioned. Providing a connection between neighborhoods is important.

The fourth category is **new roadways or road improvements**, which includes improving existing roads, such as repaving or streetlights or increasing the capacity of roads, such as: four laning SR 44 from Hazen Road to SR 15A or extending Beresford Avenue from its eastern

terminus out to SR 44.

A fifth category was also created that contains the remaining comments that did not fit into any of the above four categories, but were primarily dealing with **new technology**. The predominant comment was for the City to accommodate electric vehicles (including golf carts), with the second type of new travel being driverless cars. There was also mention of upgrading rail into the City as a spur off of the SunRail track. This section mentions the need to be flexible enough to accommodate new means of transportation as they are developed.

"A TOD helps create compact, walkable communities that provide a quality of life without complete dependence on a car for mobility and survival."

3. Transit Oriented Development

Transit Oriented Development (TOD) is a type of development that is either located around mass transit centers or along corridors that are developed at a density and intensity that makes it feasible to be served by public transportation. A TOD helps create compact, walkable communities that provide a quality of life without complete dependence on a car for mobility and survival. Because the DeLand area is not serviced extensively with transit, there is a need to put programs and facilities in place to make transit feasible as the community grows.

To illustrate the public's desire to create conditions for the development of a TOD, the following three questions are from the second survey and relate to the concept of encouraging TOD's around the City. The three questions received positive responses from those who took the survey and therefore were used as the foundation for developing the land use related portion of the Transportation Plan. The responses after each question are from both the survey and the comments from the community workshops.

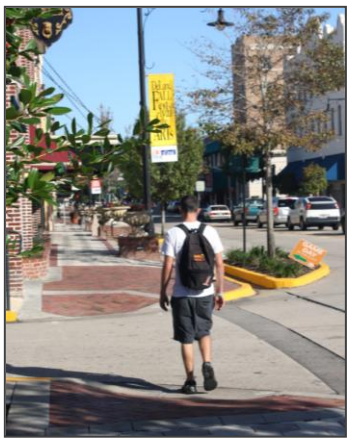

Increased density and nearby amenities encourage walkability

A. **Are you in favor of increasing development intensity along major roads to make the use of transit easier?** Below are generalized comments from the survey and meetings concerning intensity and transit.

    1. Drastically increase transit to accommodate intensity to avoid more congestion
    2. Create activity centers connected by more intense corridors
    3. No real town center that includes intermodal transportation facilities
    4. Areas where transit is planned along with development areas

B. **Do you think it is a good idea to have a mix of uses close-by to encourage walking or reduce the number of miles driven?** Below are comments related to what it would take to encourage walking.

1. Multi-story buildings preferred, but intensity should depend on neighborhood
2. Improve environment; security and amenities to encourage walking
3. Smaller pocket parks in city limits

C. **Does the City need more transportation options?** Comments below present how participants would go about creating TOD's.

1. Biking
2. Public transportation
3. Walking
4. Support genuine mixed-use, dense development along transport corridors, and curbing urban sprawl
5. Can't have downtown be the only hub in DeLand. We need several that are top city priorities.
6. Sprawl, ugly automobile-oriented development
7. Commercial businesses on high traffic highways should adhere to rules like plantings, minimal signage
8. Improve gateway entrances
9. Maintain tree canopy
10. Planning a "Transit Oriented Development Corridor" along SR 44 by Lake Winnemissett through a narrow swath of existing single family residential development makes no sense whatsoever.
11. Think how people in European cities use public transportation - rail from airport to city, buses to hotels - and homes
12. Consider SR15A for transit oriented development.
13. With "pocket parks" along the route

C. Transportation Plan – DeLand 2050

In order for the DeLand 2050 plan to become a reality there must be a transportation plan to support many of the concepts contained in DeLand 2050. Therefore, using the preceding discussion as the foundation for developing the transportation plan for DeLand 2050, the proposed plan is presented below and is illustrated in the map located at the end of this chapter.

Transit Network:

"The downtown and surrounding area will be developed as a multi-modal transportation district, with transit as a key component of the system."

The transit network is proposed to become a complete public transit system made up of local and regional routes to serve the majority of the residents near the urban core. Downtown DeLand is the main focal point for the transportation system. The downtown and surrounding area will be developed as a multi-modal transportation district, with transit as a key component of the system. The downtown will be served by a circulator system that will provide connection throughout the entire downtown area, in order to take advantage of the parking facilities and new residences. This system will provide links out to the SunRail station and to other high intensity hubs such as the airport, hospital, Stetson University and the interstate. The circulator will also connect to VOTRAN at the Intermodal Transit Facility (ITF) in the downtown. To avoid clutter on the map, the concept of a multi-modal transportation district is not shown on the map, but will coincide with the area for the downtown circulator designation.

In addition to the circulator, the regional transit system (VOTRAN) will provide service along several major corridors that connect the DeLand area to adjoining jurisdictions. Because the DeLand area is not serviced extensively with transit, there is a need to put programs and facilities in place to make transit feasible as the population increases along selected corridors. Planning for transit will be a key initial effort by the City as the City looks for ways to reduce traffic congestion.

The SunRail station and VOTRAN, along with the interstate will be the main connectors to outside the DeLand region. Express connections from downtown to the station will provide quick access between the downtown and SunRail. This will be important to allow people who live outside of the City, but work downtown, to use SunRail. If rail or other type of facility is installed along I-4, the interchange at SR 472 will become a key regional hub for all of southwest Volusia County and the City needs to have excellent links to the interchange.

Historic DeLand Station

Airport:

The airport is an excellent amenity to the DeLand region. The airport will continue to support the surrounding industrial uses as well as expand to handle even more freight and private aircraft. As the employment base grows at the airport, direct transit connections to downtown will be created. The airport is to remain an attraction for tourism and sport or recreational activities.

Bicycling/walking:

Non-motorized modes of transportation will receive more of a priority throughout the region and especially inside the multi-modal district under the Transportation Plan. Trail systems will connect to major recreational facilities. Commercial areas will provide bicycle parking and roadways will become more bicycle friendly by increasing the number of trails and creating an on-street bike network. These routes will include connections between adjacent uses. Buses will be equipped with bicycle racks.
Pedestrians will have safe routes between neighborhoods and to neighborhood commercial nodes. Key pedestrian facilities will have wider sidewalks, better lighting, benches, shade, and other amenities.

"Commercial areas will provide bicycle parking and roadways will become more bicycle friendly…."

Road Projects:

The following road projects are proposed to expand the current thoroughfare system to complete the area's road network:

a. Beresford Avenue extension from Blue Lake Avenue to SR 44

b. West parkway connecting Spring Garden Road to Hamilton Avenue (in Orange City)

c. Kepler Road/Martin Luther King Blvd improved to accommodate trucks from I-4 to the industrial parks at the airport, includes intersection of Kepler Road and SR 44

d. New connection to airport from SR 11

e. SR 44 improvements: four lanes from Grand Av to SR 15A and Voorhis Avenue to Kepler Road (includes intersection)

Transit Oriented Development:

Since public transportation as well as bicycles and walking are a major part of the future transportation network for the DeLand area, this transportation plan includes the creation of Transit Oriented Developments (TOD). TOD's are a type of development pattern that are either located around mass transit centers or along corridors that are at a density and intensity that makes it feasible to ultimately be served by public transportation.

"TOD's are a type of development pattern that are either located around mass transit centers or along corridors…."

A transit circulator to serve around downtown and/or localized routes

TOD's are proposed at the following locations:

Around the SunRail station as a transit village

Downtown (area listed as Traditional City Center on the map) – because the downtown and surrounding area was developed in a grid pattern, it will be fairly easy to transform it into a multi-modal transportation district.

Seven major roadway segments are identified as potential transit-planned corridors to support a bus network that will serve the entire DeLand region:

Transit-planned corridors:
US 17 from US 92 to SR 11

US 17/92, north – between US 92 and Plymouth Ave

US 17/92, south – between SR 15A to SR 472

SR 44 – between Grand Ave and downtown

SR 44 – between downtown and Kepler Rd

Optional Transit-planned corridors:

US 92 – from US 17 to Central Parkway

CR 92 – SR 15A to US 17/92

The corridors and TOD's are to be compatible with any existing development. Sections of these corridors will be developed quite intensively, but others will be oriented to residential in appearance (such as sloped roof, single hung windows, etc.) and not to exceed two stories with a density not to exceed 12 du/ac. to reflect adjacent structures.

D. Transportation Guidelines

In addition to a map that shows the transportation system there are also guidelines that help direct the implementation of the plan and develop a transportation system to manage traffic to prevent congestion beyond acceptable levels. Below are the guidelines that will be used in conjunction with the 2050 Transportation Plan:

1. Keep connected with regional transportation network, primarily SunRail and I-4.

2. Establish regional transit network of routes for the TOD's and planned transit corridors along with travel throughout the southwest region.

3. Provide that new development promotes transit styled villages and transit planned corridors at identified locations; such as the commuter rail station area developing as a Transit Oriented Development (TOD).

4. Create fast links from commuter rail station into downtown by auto, bus or train.

5. Develop a transit circulator to serve downtown and/or localized routes that provides connection to the regional system.

6. Continue to manage the airport to increase capacity for freight and private planes that support the industrial parks.

7. Encourage walking by creating neighborhood business centers and improving pedestrian atmosphere through safety and aesthetic measures.

8. Encourage biking by constructing a complete network with trails, lanes and on-road routes.

9. Encourage the mixing of land uses (commercial, residential, recreational, educational, public, open space, and others) that can encourage foot and bike modes of transportation through the interconnection between all businesses and neighborhoods.

10. Create walkable communities – pedestrian-friendly features include types of development, design of buildings, shade for sidewalks, defined crosswalks, etc.

11. Develop a transportation system that includes all modes of transportation for the area because roads alone will not handle the needs of the community.

12. Refocus from road building to alternative modes of transportation (i.e., transit, Sun Rail), by developing or advocating for transportation and mobility options that support economic activity.

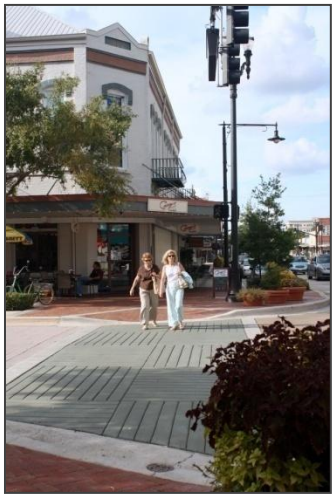

"Encourage walking by creating neighborhood business centers and improving pedestrian atmosphere through safety and aesthetic measures."

13. Create connectivity by allowing people the ability to move between major developments without necessarily entering the major road network. Completing sidewalks & trails between destinations and neighborhoods; thus creating walkable destinations.

14. Establish a multi-modal transportation district to provide an interconnected transportation system to serve the urban core area.

DeLand 2050

Guiding DeLand to Sustainability

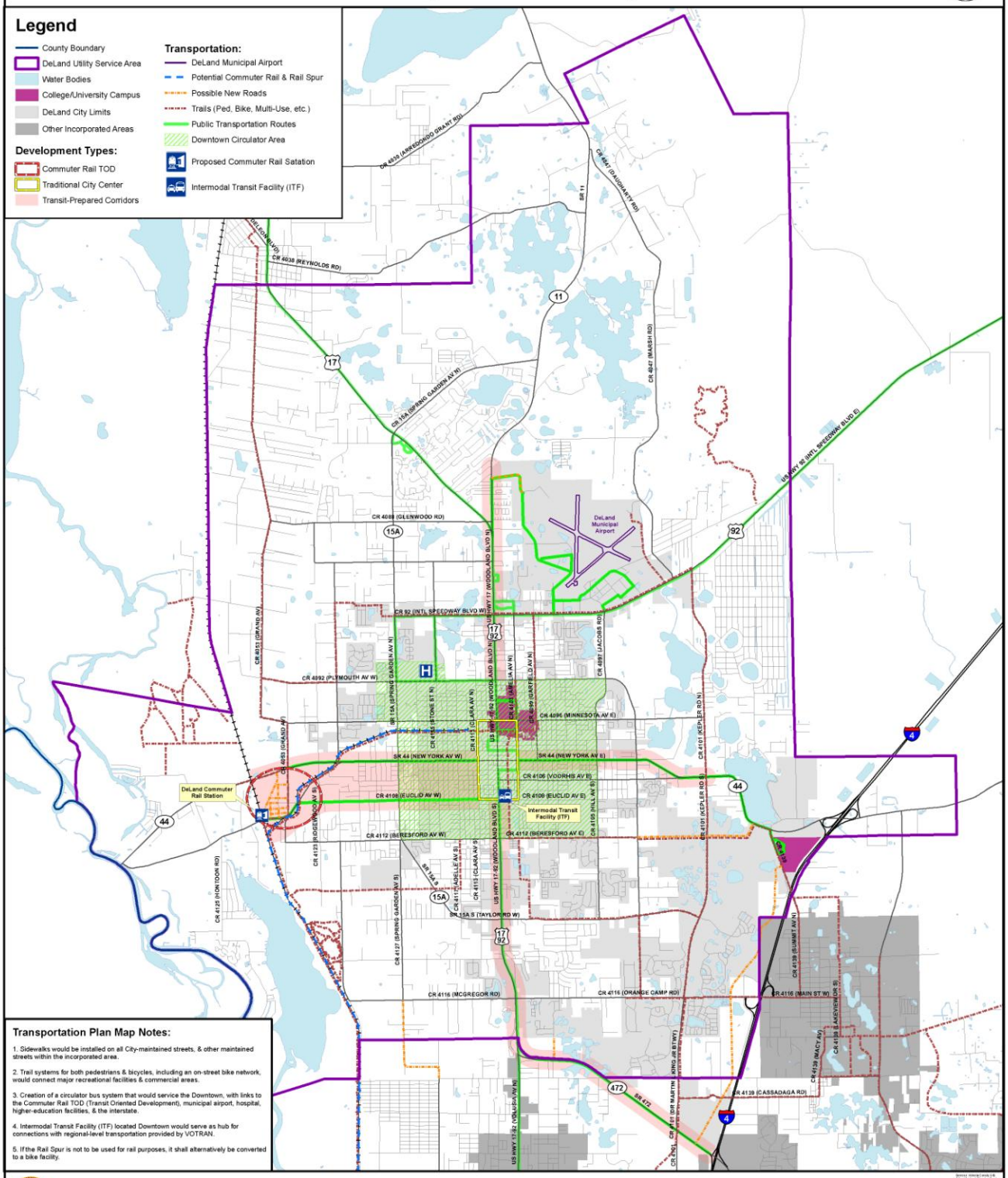

2050 Transportation Plan Map

Attachments

Intermodal Transportation Facility (ITF) – a transportation facility that combines several modes of transportation at one facility. The DeLand ITF will combine bus, bicycles, walking and parking together in a centralized location to make these modes convenient to the end user.

Multi-Modal Transportation District – A multimodal transportation district is to facilitate the use of multiple modes of transportation, leading to a reduction in automobile use and vehicle miles traveled. Local governments may designate a multimodal transportation district by amending the comprehensive plan to show the district on a future land use map. The designation of such districts recognizes the inherent, integral relationship between transportation, land use, and urban design.

This concept is suggested for the urban core area to link all the different type of transportation together under one designation and by doing this the following characteristics can be accomplished:

- Provision of a complementary mix of land uses, including residential, educational, recreational, and cultural uses

- Provision of an interconnected network of streets designed to encourage walking and bicycling use with traffic calming where desirable

- Provision of appropriate densities and intensities of land uses within walking distance of transit stops

- Provision of daily activities within walking distance of residences; public infrastructure that is safe, comfortable, and attractive for pedestrians; adjoining buildings open to the street; and parking facilities structured to avoid conflict with pedestrian, transit, automobile, and truck travel.

- Provision of transit service within the designated area, or a definitive commitment to the provision of transit. This definitive commitment should be found in local planning documents and in the approved capital improvements program. For new developments, transit connectivity to the major urban area must also be included, or a definitive commitment for transit connections, again evident in both planning documents and the approved capital improvement program.

RESOLUTION NO. 2011-87

A RESOLUTION OF THE CITY COMMISSION OF DELAND, FLORIDA, OFFICIALLY RECOGNIZING THE DELAND 2050 PLAN; PROVIDING FOR APPROPRIATE CONSIDERATION THEREOF IN FUTURE LEGISLATIVE LAND USE DECISIONS; AND PROVIDING FOR AN EFFECTIVE DATE.

WHEREAS, the DeLand Planning Board and City Commission held joint public workshops to discuss and develop an initial vision for the future development of the DeLand community based on Smart Growth principles and sustainability; and

WHEREAS, the City of DeLand held numerous community and stakeholder meetings and conducted various surveys in order to provide comments on the initial vision for the development of the DeLand community over the next 40 years; and

WHEREAS, in due consideration of the findings of those community meetings and surveys, the DeLand Planning Board and City Commission held joint public workshops to discuss a vision for the future development of the DeLand community; and

WHEREAS, the foregoing process culminated in a document entitled the DeLand 2050 Plan (hereinafter referred to as the "Plan"), a copy of which is attached hereto; and

WHEREAS, the Plan is not a part of the City's Comprehensive Plan or Land Development Regulations, and does not otherwise constitute a binding law or regulation of the City of DeLand, and this resolution should not be construed as the adoption of any law, rule or regulation of the City of DeLand, nor should it be construed in any way to affect the permitted uses to which any property depicted in the Plan can be used; and

WHEREAS, the City Commission finds that it is in the best interest of the health, welfare and safety of its present and future citizens that the Plan be considered wherever and whenever it is appropriate to do so in legislative decision making processes concerning the future growth and development of the DeLand community; and

WHEREAS, it is the desire of the City Commission of the City of DeLand that the Plan be given due consideration when future legislative land use recommendations and decisions are being considered.

NOW, THEREFORE BE IT RESOLVED BY THE CITY COMMISSION OF DELAND, FLORIDA:

Section 1. The foregoing preamble is found to be correct and is hereby incorporated herein by reference.

Section 2. The attached DeLand 2050 Plan is hereby officially recognized, and the City Commission of the City of DeLand hereby declares its intentions for the consideration to be given the said Plan, as more particularly set forth in the preamble to this Resolution.

Section 3. If any section, sentence, clause or phrase of this Resolution is held to be invalid or unconstitutional by any court of competent jurisdiction, that holding shall in no way affect the remaining portions of this Resolution.

Section 4. This Resolution shall become effective immediately upon its adoption.

PASSED AND DULY ADOPTED this 21st day of November, 2011.

Robert F. Apgar
Mayor-Commissioner

ATTEST:

Julie A. Hennessy
City Clerk - Auditor

APPROVED AS TO FORM AND LEGALITY:

Darren J. Elkind
City Attorney